"Apollo" Valves

data sheet

82-200F3 series

3-piece full port bronze medical gas valve | two gauge ports ½" - 2 ½"

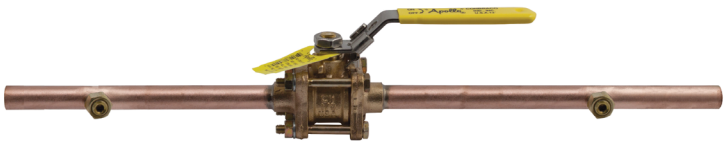

features

- cast bronze valve body & valve end caps
- RPTFE seats and stuffing box ring
- MSS SP-110 - "ball valves threaded, socket welding, solder joint, grooved & flared ends"
- vacuum service to 29" Hg
- full port in all sizes
- blowout-proof stem design
- manufactured in the USA – BAA and BABA compliant

description

The "Apollo"® 82-200/240 series is a 3-piece cast bronze valve with –F1 trim intended for medical gas applications. Featuring copper phos brazed tube extensions, this valve can be soldered or brazed into the piping system without disassembly. The 3-piece design allows for in-line serviceability. Valves are cleaned and bagged for oxygen service, are available with locking or non-locking handles and one tapped and plugged gauge port. Proudly manufactured in our South Carolina facilities.

NFPA 99 requires the valves to be secured in the open position. For medical gas applications that are Outside-the-Zone-Box, "Apollo"® offers three standard configurations: "F1" (1 gauge port), "F3" (2 gauge ports) & no gauge ports (with locking handles).

size range

- ½" - 2 ½"

connections

- soldered/brazed

configurations

- 82-200 series - solder

component	material
body	bronze, ASTM B584-C84400
ball	stainless steel, ASTM A276-316
seat (2)	RPTFE
stem	brass ASTM B16, C36000 or stainless steel, ASTM A276-316
gland	brass ASTM B16, C36000
stem packing	RPTFE
stem bearing	RPTFE
handle	steel, zinc plated with vinyl or stainless steel, zinc plated with vinyl
end cap (2)	bronze, ASTM B584-C84400
lever nut	steel, zinc plated or stainless steel
body bolt	steel, zinc plated or stainless steel
hex nut	steel, zinc plated or stainless steel
extension	type K copper tubing
brazing alloy	copper phos paste
cap plugs	(not shown)

performance rating

CWP	vacuum service
600 psig (maximum)	29 in. Hg

approvals/compliance

- MSS SP-110
- CSA B51 CRN: 0C10908.5C
- Buy American Act (BAA)
- Build America Buy America (BABA) Act

5 YEAR WARRANTY MADE IN USA · BAA BUY AMERICAN ACT COMPLIANT · MADE IN USA · CRN

this specification is provided for reference only. we reserve the right to change any portion of this specification without notice and without incurring obligation to make such changes to Aalberts integrated piping systems products previously or subsequently sold.

Aalberts integrated piping systems
10715 Sikes Place / suite 200 / Charlotte / NC / 28277
aalberts-ips.us

job name	
job location	
engineer	
contractor	
tag	
PO#	
rep	
wholesaler dist	

data sheet

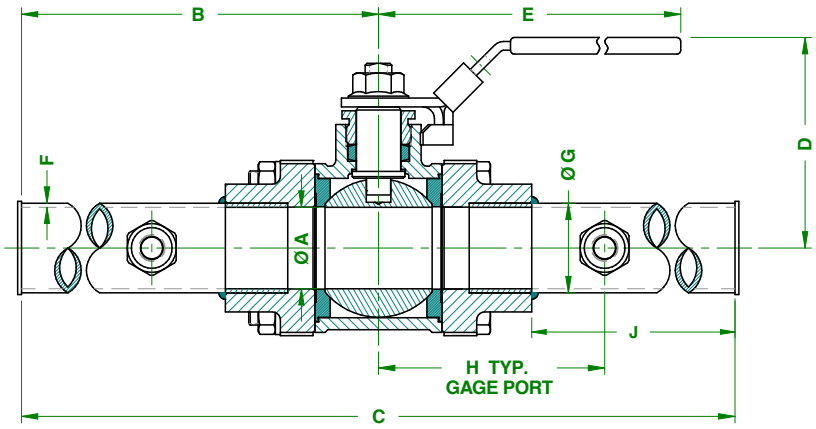

dimensions

oxygen cleaned

trim plated part number	SS ball & stem part number	size	a	b	c	d	e (locking)	f	g	h	j	weight
locking handle	locking handle											
82-203-F3	82-243-F3	½"	0.62"	12.27"	24.53"	2.23"	5.31"	0.05"	0.63"	4.25"	10.84"	1.70 lbs
82-204-F3	82-244-F3	¾"	0.81"	12.25"	24.50"	2.41"	5.31"	0.07"	0.75"	4.24"	10.53"	2.40 lbs
82-205-F3	82-245-F3	1"	1.00"	12.30"	24.60"	3.01"	6.29"	0.07"	1.25"	4.24"	10.32"	3.40 lbs
82-206-F3	82-246-F3	1 ¼"	1.25"	12.23"	24.46"	3.22"	6.29"	0.07"	1.38"	4.23"	9.89"	5.50 lbs
82-207-F3	82-247-F3	1 ½"	1.50"	12.25"	24.50"	4.04"	8.93"	0.08"	1.63"	4.25"	9.63"	8.50 lbs
82-208-F3	82-248-F3	2"	2.00"	12.25"	24.50"	4.15"	8.93"	0.09"	2.13"	4.25"	9.18"	14.00 lbs
82-209-F3	82-249-F3	2 ½"	2.50"	11.75"	23.50"	5.31"	10.06"	0.10"	2.50"	6.38"	8.13"	26.80 lbs

*3" & 4" valves come standard with SS ball and stem (not optional) and adjustable length locking handles.

"Apollo" Valves

data sheet

82A-240F3 series

3-piece full port bronze medical gas valve | two gauge ports 3" - 4"

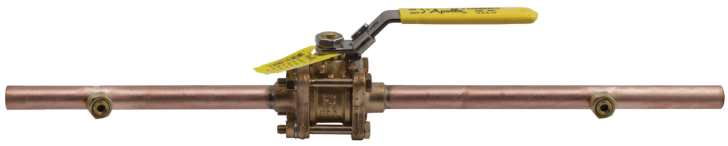

features

- cast bronze valve body & valve end caps
- RPTFE seats and stuffing box ring
- MSS SP-110 - "ball valves threaded, socket welding, solder joint, grooved & flared ends"
- vacuum service to 29" Hg
- full port in all sizes
- blowout-proof stem design
- manufactured in the USA – BAA and BABA compliant

description

The "Apollo"® 82A-240 series is a 3-piece cast bronze valve with –F1 trim intended for medical gas applications. Featuring copper phos brazed tube extensions, this valve can be soldered or brazed into the piping system without disassembly. The 3-piece design allows for in-line serviceability. Valves are cleaned and bagged for oxygen service, are available with locking or non-locking handles and one tapped and plugged gauge port. Proudly manufactured in our South Carolina facilities.

NFPA 99 requires the valves to be secured in the open position. For medical gas applications that are Outside-the-Zone-Box, "Apollo"® offers three standard configurations: "F1" (1 gauge port), "F3" (2 gauge ports) & no gauge ports (with locking handles).

size range

- 3" - 4"

connections

- soldered/brazed

configurations

- 82-200 series - solder

component	material
body	bronze, ASTM B584-C84400
ball	stainless steel, ASTM A276-316
seat (2)	RPTFE
stem	brass ASTM B16, C36000 or stainless steel, ASTM A276-316
gland	brass ASTM B16, C36000
stem packing	RPTFE
stem bearing	RPTFE
handle	steel, zinc plated with vinyl or stainless steel, zinc plated with vinyl
end cap (2)	bronze, ASTM B584-C84400
lever nut	steel, zinc plated or stainless steel
body bolt	steel, zinc plated or stainless steel
hex nut	steel, zinc plated or stainless steel
extension	type K copper tubing
brazing alloy	copper phos paste
cap plugs	(not shown)

performance rating

CWP	vacuum service
600 psig (maximum)	29 in. Hg

approvals

- MSS SP-110
- CSA B51 CRN: 0C10908.5C
- Buy American Act (BAA)
- Build America Buy America (BABA) Act

5 YEAR WARRANTY MADE IN USA · BAA BUY AMERICAN ACT COMPLIANT · MADE IN USA · CRN

this specification is provided for reference only. we reserve the right to change any portion of this specification without notice and without incurring obligation to make such changes to Aalberts integrated piping systems products previously or subsequently sold.

Aalberts integrated piping systems
10715 Sikes Place / suite 200 / Charlotte / NC / 28277
aalberts-ips.us

job name	
job location	
engineer	
contractor	
tag	
PO#	
rep	
wholesaler dist	

data sheet

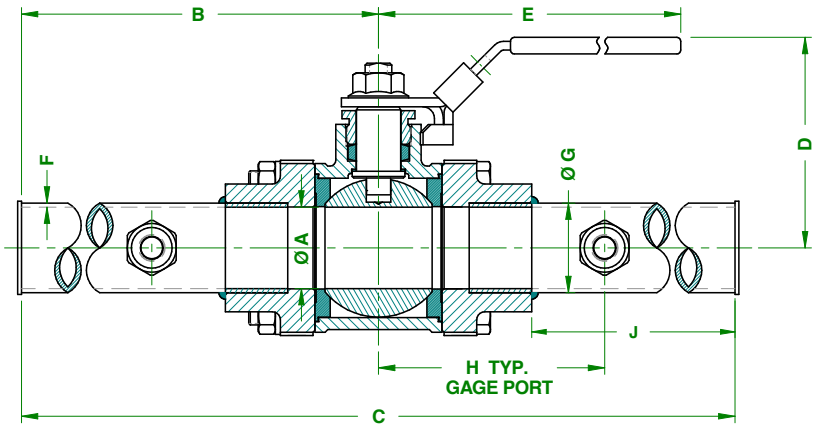

dimensions

oxygen cleaned

trim plated part number	SS ball & stem part number	size	a	b	c	d	e (locking)	f	g	h	j	weight
locking handle	locking handle											
--	82-24A-F3	3"	3.00"	11.94"	23.87"	8.10"	18.00"*	0.05"	3.00"	7.75"	7.78"	42.20 lbs
--	82-24A-F3	4"	4.00"	12.68"	25.37"	8.88"	18.00"*	0.07"	4.00"	8.00"	7.25"	106.00 lbs

*3" & 4" valves come standard with SS ball and stem (not optional) and adjustable length locking handles.