SPECIFICATIONS

FIGURE 633 & 634

STAINLESS STEEL BALL VALVES

3-WAY FULL PORT 150# FLANGED

FEATURES

- ANSI B16.5 150# flanges
- Full port
- All stainless steel construction
- L-Port 90° flow path (Fig. 633)
- T-Port 90° and 180° flow path (Fig. 634)
- RTFE seats
- Single-piece stem and ball
- Trunnion mounted
- Top entry body design
- Adjustable packing
- Pad lockable stem (up to 3")
- 4-hole actuator mounting pad
- Sizes 2"–8"

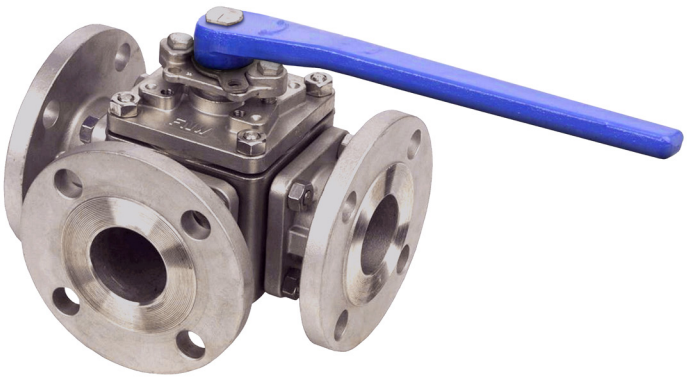

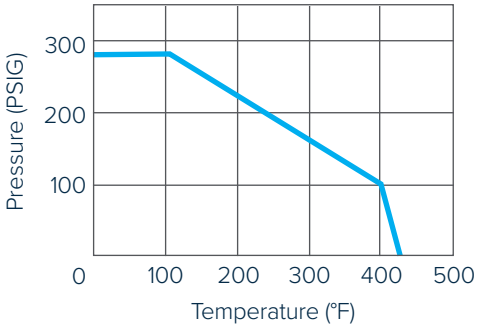

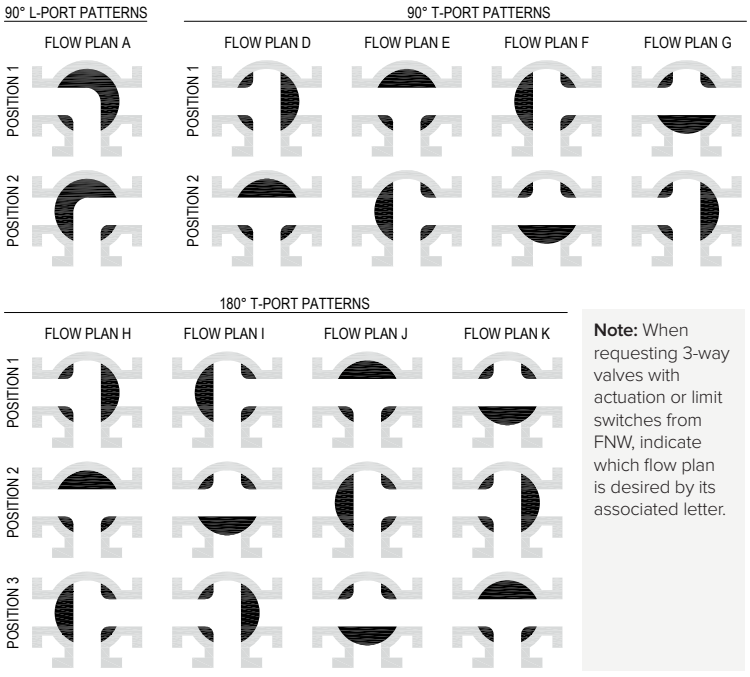

Note: When requesting 3-way valves with actuation or limit switches from FNW, indicate which flow plan is desired by its associated letter.

FIGURE NUMBER MATRIX

FNW 633/634

PORT TYPE	SIZE CODE (IN.)
L-Port = 633	2 = K
T-Port = 634	2-1/2 = L
	3 = M
	4 = P
	6 = U

We reserve the right to modify or improve the designs or specifications of our products at any time without notice.

SPECIFICATIONS

FIGURE 633 & 634

STAINLESS STEEL BALL VALVES

3-WAY FULL PORT 150# FLANGED

TORQUE (IN-LBS)

Size	Torque
2	800
2-1/2	1,200
3	1,800
4	3,100
6	10,000
8	18,000

Note: Torque values do not include safety factory, 40% safety factory recommended when sizing an actuator.

REPAIR KITS

FNW 633RKT
SIZE CODE (IN.)
2 = K
3 = M
4 = P
6 = U

CV & WEIGHTS

Size (in.)	CV 90° (L-Port)	CV 90° (T-Port)	CV 180° (T-Port)	Wt (lbs)
2	153	188	109	35
2-1/2	275	336	194	57
3	364	446	258	68
4	662	811	468	110
6	1,575	1,929	1,114	243
8	2,889	-	-	408

REFERENCE CHART

Size (in.)	Dimensions (in.)																
	ØB	ØC	ØD	E	ØG	L	H	ØK	ØM	T1	T2	n	ØN	S	ØY	H3	X
2	4.75	3.62	1.97	15.16	5.98	8.66	4.80	2.76	3/8	0.06	0.63	4	0.75	0.67	0.87	1.77	0.79
2-1/2	5.50	4.13	2.60	15.16	7.01	11.06	6.42	2.76	7/16	0.06	0.69	4	0.75	0.67	1.16	2.99	1.77
3	6.00	5.00	2.99	15.16	7.48	10.94	6.34	4.02	7/16	0.06	0.75	4	0.75	0.67	1.16	2.44	1.42
4	7.50	6.18	3.98	15.16	9.02	13.15	8.46	4.92	1/2	0.06	0.94	8	0.75	0.91	1.34	2.48	1.42
6	9.50	8.50	5.94	19.69	10.98	16.93	10.08	4.92	1/2	0.06	1.00	8	0.87	1.38	1.77	3.15	1.57
8	11.75	10.63	7.91	19.69	13.50	21.22	11.93	6.50	5/8	0.06	1.13	8	0.87	1.77	2.36	3.31	1.61

©2026 Ferguson Enterprises, LLC 0226 8172610

We reserve the right to modify or improve the designs or specifications of our products at any time without notice.

PARTS BREAKDOWN

FIGURE 633 & 634

STAINLESS STEEL BALL VALVES

3-WAY FULL PORT 150# FLANGED

PARTS DIAGRAM

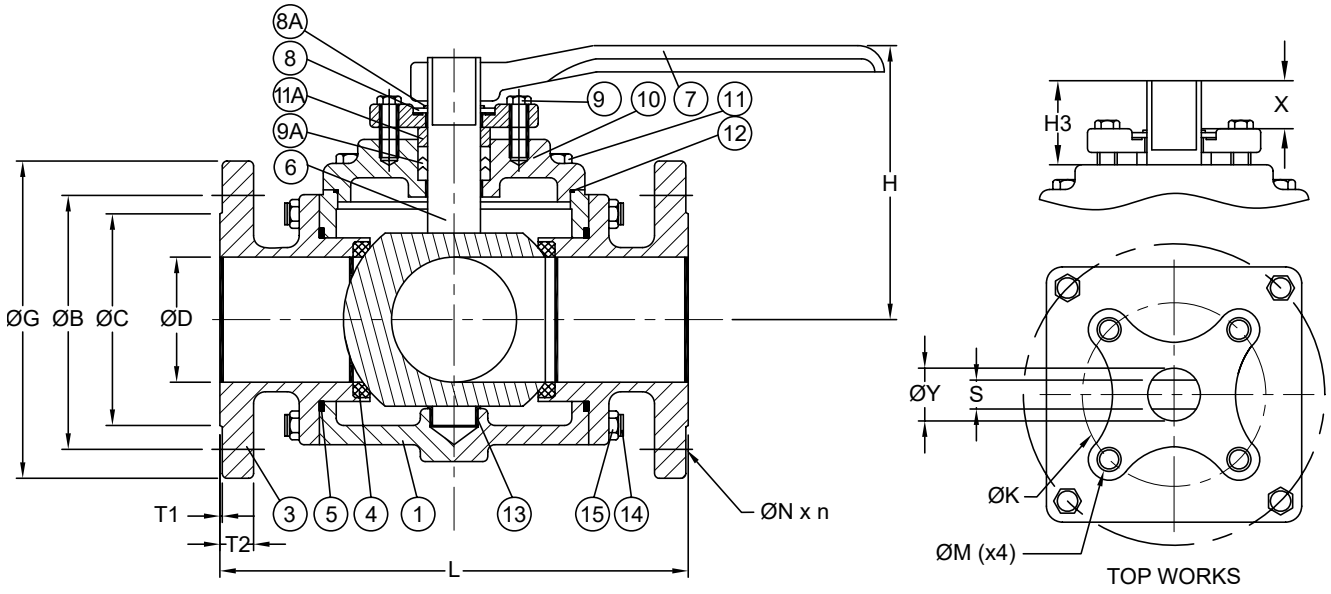

PART MATERIALS & QUANTITY

Ref #	Description	Material	Qty
1	Body	ASTM A351 Gr. CF8M	1
2	Ball & Stem	ASTM A351 Gr. CF8M	1
3	Flanged End Cap	ASTM A351 Gr. CF8M	3
4	Seat	RTFE (PTFE+15% G.F.)	3
5	Body Seal	PTFE	3
6	Stem Packing	PTFE	1 set
7	Handle	FCD45	1
8	Stopper	304SS	1
8A	Retainer Ring	S45C	1
9	Gland Bolt	304SS	2
9A	Gland	CF8	1
10	Cover	ASTM A351 Gr. CF8M	1

Ref #	Description	Material	Qty
11	Cover Bolt	304SS	1 set
12	Cover Seal	PTFE	1
13	Stem Sleeve	PTFE+SS	1
14	Body Stud	304SS	3 sets
15	Body Nut	304SS	3 sets

©2026 Ferguson Enterprises, LLC 0226 8172610

We reserve the right to modify or improve the designs or specifications of our products at any time without notice.