FIGURE 600B
STAINLESS STEEL BALL VALVES

2-PC FULL PORT 150# FLANGED

FEATURES
- Full port
- 150 WSP
- Flanged connection
- TFM 1600 + 20% GF seats
- Stainless steel trim
- Anti-static design
- Blowout-proof stem
- Investment cast body
- Adjustable packing
- Locking device
- Direct mounting pad
- Manufactured silicone-free
- Sizes 1/2"–8"



PRODUCT SPECIFICATIONS
Standards
- Design: ASME B16.34
- Pressure test: API 598
- Flange dimensions: ASME B16.5
- Materials: ASME B16.34
- Mounting pad: ISO 5211
- NACE MR0103 and MR0175 compliant
- Fugitive emissions: ISO 15848-1 and TA-Luft
- NSF/ANSI/CAN 61 and ANS/ANSI/CAN 372 Certified

FIGURE NUMBER MATRIX

FNW 600B	
Size Code (in.)	
1/2 = D	2-1/2 = L
3/4 = F	3 = M
1 = G	4 = P
1-1/2 = J	6 = U
2 = K	8 = X

REPAIR KITS

FNW 600BRKTFM	
Size Code (in.)	
1/2 = D	2-1/2 = L
3/4 = F	3 = M
1 = G	4 = P
1-1/2 = J	6 = U
2 = K	8 = X

TORQUE (IN-LBS)

Size / ΔP (in.)	75 PSIG	150 PSIG	300 PSIG
	5 Bar	10 Bar	20 Bar
1/2	53	53	53
3/4	62	62	62
1	97	97	106
1-1/2	186	186	212
2	265	283	310
2-1/2	425	442	478
3	690	699	788
4	1062	1071	1186
6	2973	2982	3310
8	3929	4186	4743

Note: 30% safety factor is recommended when sizing actuator.

CV & WEIGHTS

Size (in.)	CV	Wt (lbs)
1/2	30	3.52
3/4	55	4.71
1	96	6.34
1-1/2	270	12.98
2	470	18.66
2-1/2	750	30.14
3	1150	38.61
4	2100	65.52
6	5000	163.00
8	9500	282.00

We reserve the right to modify or improve the designs or specifications of our products at any time without notice.

FIGURE 600B
STAINLESS STEEL BALL VALVES

2-PC FULL PORT 150# FLANGED

REFERENCE CHART

Size (in.)	Dimensions (in.)															
	d	L	R	D	C	T	f	N	h	H	H1	M	P	U1	U2	E1
1/2	0.59	4.25	1.38	3.50	2.38	0.31	0.06	4	5/8	1.93	3.11	0.30	0.354	0.24	0.24	1.42
3/4	0.79	4.62	1.69	3.88	2.75	0.34	0.06	4	5/8	2.09	3.31	0.35	0.354	0.24	0.28	1.42
1	0.98	5.00	2.01	4.25	3.12	0.38	0.06	4	5/8	2.32	3.54	0.43	0.433	0.24	0.28	1.65
1-1/2	1.50	6.50	2.88	5.00	3.88	0.50	0.06	4	5/8	2.99	4.33	0.55	0.551	0.28	0.35	1.97
2	1.97	7.00	3.62	6.00	4.75	0.56	0.06	4	3/4	3.23	4.53	0.55	0.551	0.28	0.35	1.97
2-1/2	2.50	7.50	4.12	7.00	5.50	0.62	0.06	4	3/4	4.02	5.91	0.67	0.669	0.35	0.43	2.76
3	2.99	8.00	5.00	7.50	6.00	0.69	0.06	4	3/4	4.41	6.93	0.67	0.669	0.35	0.43	2.76
4	3.94	9.00	6.19	9.00	7.50	0.88	0.06	8	3/4	5.51	8.31	0.87	0.866	non	0.43	non
6	5.91	15.5	8.50	11.0	9.50	0.94	0.06	8	7/8	7.99	11.18	1.06	1.063	0.55	non	4.92
8	7.87	18.0	10.63	13.5	11.75	1.06	0.06	8	7/8	9.96	13.9	1.42	1.417	0.71	non	5.51

Size (in.)	Dimensions (in.)			Wt (lbs)
	E2	W	ISO 52111	
1/2	1.65	5.77	F03–F04	3.52
3/4	1.97	5.77	F03–F05	4.71
1	1.97	6.95	F04–F05	6.34
1-1/2	2.76	7.75	F05–F07	12.98
2	2.76	7.75	F05–F07	18.66
2-1/2	4.02	10.5	F07–F10	30.14
3	4.02	11.9	F07–F10	38.61
4	4.02	15.8	F07–F10	65.52
6	non	31.6	F12	163.00
8	non	31.6	F14	282.00

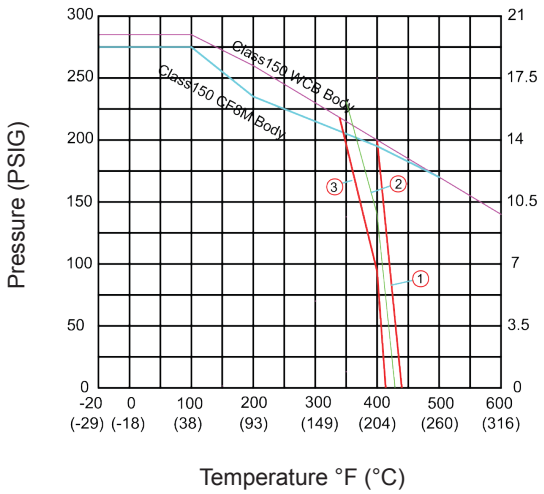

1. • NPS 1/2" to NPS 2"
   • 200 PSIG at 400˚F
2. • NPS 2-1/2" to NPS 4"
   • 140 PSIG at 400˚F
3. • NPS 5" to NPS 8"
   • 90 PSIG at 400˚F

We reserve the right to modify or improve the designs or specifications of our products at any time without notice.

FIGURE 600B
STAINLESS STEEL BALL VALVES

2-PC FULL PORT 150# FLANGED

PARTS DIAGRAM

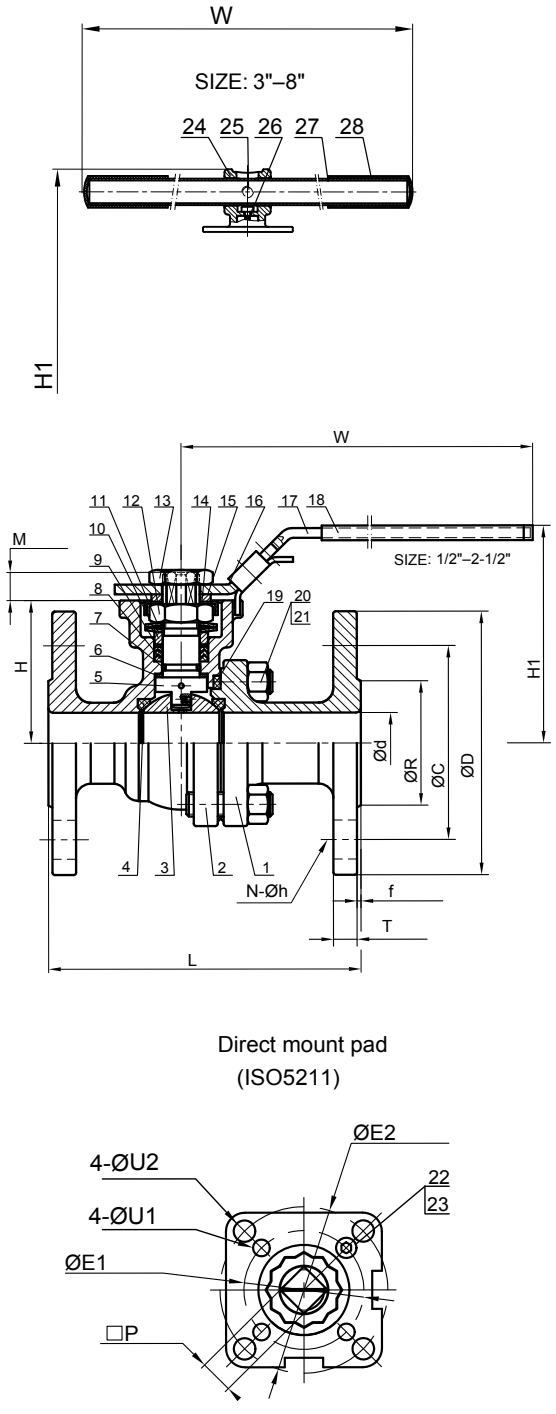

Direct mount pad
(ISO5211)

PART MATERIALS

Ref #	Description (in.)	Material
1	End Cap	CF8M
2	Body	CF8M
3	Ball	CF8M
4	Ball Seat	TFM1600+20% GF
5	Stem (anti-static device)	316
6	Thrust Washer	TFM4215
7	O-Ring	FKM
8	Packing	TFM1600
9	Bushing	50% SS+50% PTFE
10	Gland	316
11	Belleville Washer	301
12	Stem Nut	A194-8 (304)
13	Handle Nut (1/2–2-1/2)	A194-8 (304)
14	Stop-Lock Cap	304
15	Handle Gland	304
16	Lock Device (1/2–2-1/2)	304
17	Handle (1/2–2-1/2)	304
18	Handle Sleeve (1/2–2-1/2)	Vinyl Plastic
19	Body Gasket	PTFE
20	Bolt Nut	A194-8
21	Bolting	A193-B8
22	Stop Bolt	A2-70
23	Stop Nut	A2-70
24	Handle Adapter (3–8)	CF8
25	Set Screw (3–8)	A2-70
26	Bolting (3–8)	A2-70
27	Pipe Handle (3–8)	A53+Zn Plated
28	Handle Sleeve (3–8)	Vinyl Plastic

©2026 Ferguson Enterprises, LLC 0926 9903088

We reserve the right to modify or improve the designs or specifications of our products at any time without notice.