BOBRICK

Technical Data

SURFACE-MOUNTED ROLL TOWEL DISPENSER

B-2860

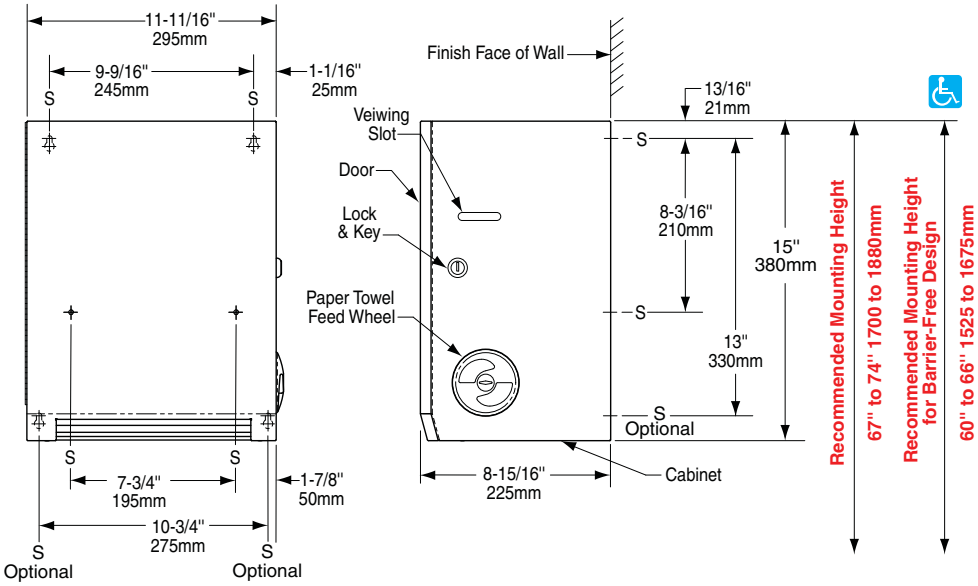

MATERIALS:

Cabinet — 18-8 S, type-304, 22-gauge (0.8mm) stainless steel. All-welded construction. Exposed surfaces have satin finish. Equipped with a tumbler lock keyed like other Bobrick washroom accessories.

Door — 18-8 S, type-304, 22-gauge (0.8mm) stainless steel with satin finish. Secured to cabinet with a full-length stainless steel piano-hinge.

Roll Towel Mechanism — Durable, high-impact resin materials. Accepts standard-core rolls up to 8" (205mm) wide, 8" (205mm) diameter. Dispenses one 12" (305mm) length of towel per pull. Accommodates up to 3-1/2" (90mm) diameter stub roll with automatic transfer to full roll.

OPERATION:

Touch-Free pull towel dispensing mechanism dispenses one 12" (305mm) length of towel per pull and operates smoothly and quietly. User only touches the paper. Exterior paper towel feed wheel available for use when filling dispenser and for user to advance paper should it become necessary to feed paper through dispenser. Automatic transfer dispenses stub roll before new roll is dispensed. When stub roll is depleted, advancement of paper towel feed wheel allows the main roll to start dispensing without the need to open the dispenser. Dispenser accommodates up to 8" (205mm) wide, 8" (205mm) diameter, non-perforated paper towel rolls and pull force to operate 1.8 pounds (8.0 N) to comply with barrier-free accessibility guidelines (including ADAAG in U.S.A.).

INSTALLATION:

Mount unit on wall with four #8 x 1-1/4" (4.2 x 32mm) sheet-metal screws (not furnished) at points indicated by an *S*. Optional mounting screw locations available, at installer's discretion. For plaster or dry wall construction, provide concealed backing to comply with local building codes, then secure unit with sheet-metal screws. For other wall surfaces, provide fiber plugs or expansion shields for use with sheet-metal screws, or provide 1/8" (3mm) toggle bolts or expansion bolts.

SPECIFICATION:

Surface-mounted roll-paper-towel dispenser shall be type-304 stainless steel with all-welded construction; exposed surfaces shall have satin finish. Door shall be secured to cabinet with a full-length stainless steel piano-hinge. Unit shall be equipped with a tumbler lock keyed like other Bobrick washroom accessories. Towel mechanism accommodates up to 8" (205mm) wide, 8" (205mm) diameter, non-perforated paper towel rolls. Touch-Free pull towel mechanism dispenses one 12" (305mm) length of towel paper per pull. User only touches the paper. Automatic transfer shall dispense stub roll up to 3-1/2" (90mm) diameter before new roll is dispensed. Equipped with paper towel feed wheel for use in filling the dispenser, for user to advance paper should it become necessary to feed paper through dispenser. Paper towels are dispensed with pull force to operate 1.8 pounds (8.0 N) to comply with barrier-free accessibility guidelines (including ADAAG in U.S.A.).

Surface-Mounted Roll-Paper-Towel Dispenser shall be Model B-2860 of Bobrick Washroom Equipment, Inc., Clifton Park, New York; Jackson, Tennessee; Los Angeles, California; Bobrick Washroom Equipment Company, Scarborough, Ontario; Bobrick Washroom Equipment Pty. Ltd., Australia; and Bobrick Washroom Equipment Limited, United Kingdom.

The illustrations and descriptions herein are applicable to production as of the date of this Technical Data Sheet.
The manufacturer reserves the right to, and does from time to time, make changes and improvements in designs and dimensions.

Revised 4/27/11 Printed in U.S.A.
© 2011 by Bobrick Washroom Equipment, Inc.