Hotel / Motel Technical Specification

Retractable Clothesline RR5506

Stock Numbers:

q **RR5506HD – Retractable Clothesline**
Polished Chrome Finish
Locking Nut
Spring Loaded String

Dimensions:

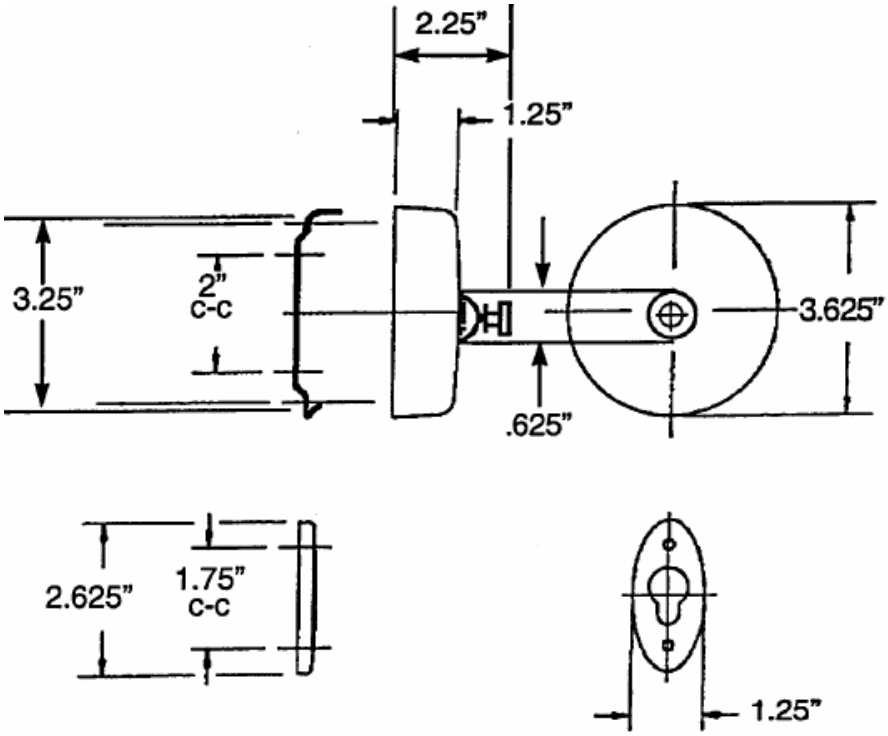

Materials:

ALL CHROME BATH HARDWARE IS TRIPLE PLATED WITH COPPER, NICKEL AND CHROMIUM FOR LONG LASTING BEAUTY, AND MEET ASTM-B86 STANDARDS.

Retractable Clothesline base is 20 gauge galvanized steel. Wall plate is 16 gauge zinc plated steel. Cover is 23 gauge brass. Cover and flange have a polished brass or polished chrome (triple plated) finish. Cord flange is 21 gauge brass. Spring is type 301 high-tensile stainless strip .008" thick x 1.25" wide. Cord is 10' nylon. Cord knob is nylon.

Installation Instructions:

Mount wall plate vertically keeping the flat side against the wall with hook at bottom, using the two #8 x 1 ¼" roundhead zinc plated steel screws (provided). Mount unit to wall plate and secure with set screw. Install cord flange on opposite wall, with larger opening on top, using two #9 x ¾" flathead zinc plated screws provided.
Note: Wood blocking is preferable behind all wall surfaces. If wood blocking is not available, the following optional fasteners are suggested: Tile/Masonry – Plastic or Lead Anchors; Plaster/Drywall – Toggle Bolts.

Stock Number:_____Retractable Clothesline
By Creative Specialties

Creative Specialties® International
a Division of MOEN
Buy it for looks. Buy it for life®

25300 AL MOEN DRIVE • NORTH OLMSTED, OH 44070
CORPORATE HEADQUARTERS: (800) 321-8809 • FAX: (800) 848-6636
INTERNATIONAL: (440) 962-2000 • FAX: (440) 962-2726
CUSTOMER SERVICE (USA): 800-882-0116 • FAX: (888) 379-2720
WWW.CSI.MOEN.COM

©Copyright Creative Specialties International 2006