Installation, Maintenance, & Repair
Series 757, 757DCDA & LF757DCDA

Double Check Valve Assemblies
Double Check Detector Assemblies

Sizes: 2½" – 10" (65 – 250mm)

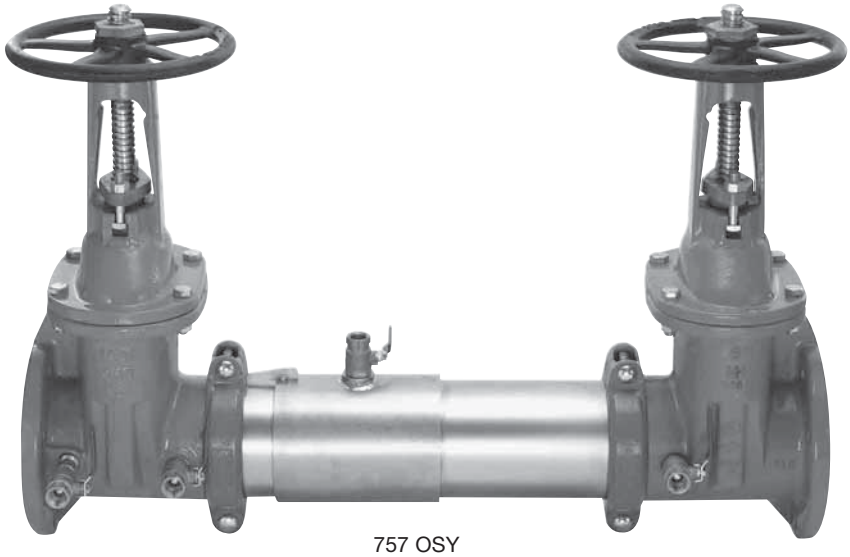

757 OSY

⚠ WARNING

You are required to thoroughly read all installation instructions and product safety information before beginning the installation of this product. **FAILURE TO COMPLY WITH PROPER INSTALLATION AND MAINTENANCE INSTRUCTIONS COULD RESULT IN PRODUCT FAILURE WHICH CAN CAUSE PROPERTY DAMAGE, PERSONAL INJURY AND/OR DEATH.** Watts is not responsible for damages resulting from improper installation and/or maintenance.

Local building or plumbing codes may require modifications to the information provided. You are required to consult the local building and plumbing codes prior to installation. If this information is not consistent with local building or plumbing codes, the local codes should be followed.

Need for Periodic Inspection/Maintenance: This product must be tested periodically in compliance with local codes, but at least once per year or more as service conditions warrant. Replace internal components every 5 years.
Corrosive water conditions, and/or unauthorized adjustments or repair could render the product ineffective for the service intended. Regular checking and cleaning of the product's internal components helps assure maximum life and proper product function.

NOTE: For Australia and New Zealand, line strainers should be installed between the upstream shutoff valve and the inlet of the backflow preventer.

Its important that this device be tested periodically in compliance with local codes, but at least once per year or more as service conditions warrant. If installed on a fire sprinkler system, all mechanical checks, such as alarm checks and backflow preventers, should be flow tested and inspected internally in accordance with NFPA 13 and NFPA 25.

Testing

For field testing procedure, send for IS-TK-DL, IS-TK-9A, IS-TK-99E AND IS-TK-99D.

For other repair kits and service parts, send for PL-RP-BPD.

For technical assistance, contact your local Watts representative.

Installation Instructions

Series 757, 757DCDA & LF757DCDA

Guidelines

Most field problems occur because dirt and debris present in the system at the time of installation become trapped in the #1 check. The system should be flushed before the backflow valve is installed. If the system is not flushed until after the backflow valve is installed, remove both check modules from the valve and open the inlet shutoff to allow water to flow for a sufficient time to flush debris from the water line. If debris in the water system continues to cause fouling, a strainer can be installed upstream of the backflow assembly.

Watts Series 757 and 757DCDA/LF757DCDA may be installed in either horizontal or vertical position as long as the backflow assembly is installed in accordance with the direction of the flow arrow on the assembly and the local water authority approves the installation. The assembly should be installed with adequate clearance around the valve to allow for inspection, testing and servicing. 12" should be the minimum clearance between the lower portion of the assembly and the floor or grade.

NOTE: Assembly body should not be painted.

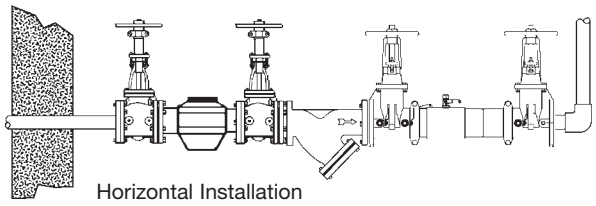

Horizontal Installation

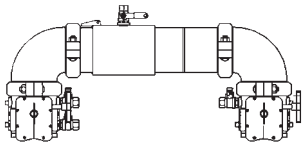

N Pattern

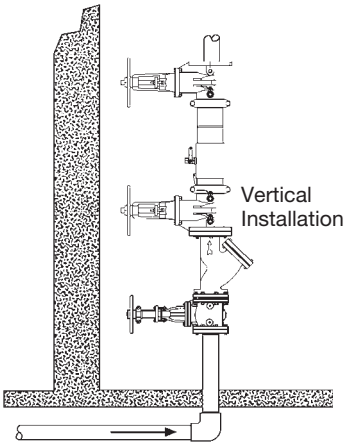

Vertical Installation

Maintenance Instructions

2½" – 6" (65 – 150mm)

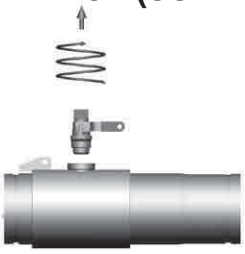

Figure A

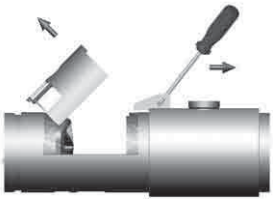

Figure B

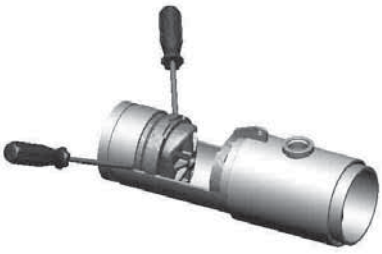

Figure C

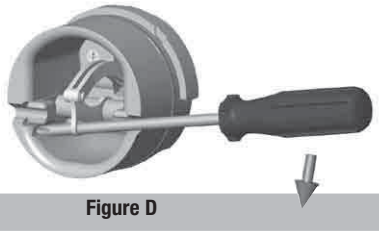

Figure D

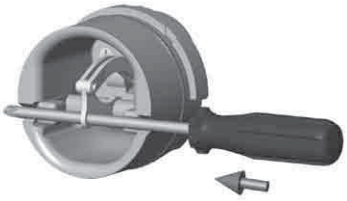

Figure E



Figure F

Prior to servicing any Watts valve, it is mandatory to shut down the water system by closing both the inlet and outlet shutoff valves. After shutoff valves are closed, open test cock #2, #3 and #4 to relieve pressure within the backflow assembly.

1. After #3 test cock has been opened to relieve pressure, remove #3 test cock from housing. (Figure A)
2. Insert a #3 screwdriver through the hole on the top of the cover sleeve and using both hands rotate the cover sleeve approximately 1/4-turn clockwise and 1/4-turn counterclockwise to break the sleeve O-ring seals. Using the screwdriver, slowly slide the cover sleeve to the downstream side of the housing. (Figure B)
3. Remove the stainless steel check retainer from the housing. (Figure B)
4. Remove the #1 check module (Figure C) by inserting two flat blade screwdrivers into the slots on either side of the check module and gently pry the check module toward the open zone.
5. Remove #2 check module with the same instructions as in #4 above. For servicing 6" (150mm) checks see 8" – 10" (200 – 250mm) instructions on p. 3.
6. To clean or inspect either check module, insert a #3 screwdriver through the downstream side of the check module as shown in Figure D and E. When the screwdriver is in place, remove the E-clip (Figure F) and pin connecting the structural members and the check clapper will open with no tension.
7. Thoroughly clean the seating area. The sealing disc may be removed, if necessary, by removing the screws connecting the keeper plate to the clapper. The sealing disc may be reversed and reinstalled if the elastomer is cut or damaged.
8. Wash check module and O-ring and inspect for any damage. If damaged, reinstall new parts.
9. After thorough cleaning, lubricate O-ring w/FDA approved lubricant, replace pin and E-clip in structural members, remove screw driver and reinstall check modules and assemble housing in reverse order of these instructions.

Maintenance Instructions

Series 757, 757DCDA & LF757DCDA

8" – 10" (200 – 250mm)

Material/Tool Requirements:

- #3 Phillips screwdriver or 5/16" diameter rod, length sufficient to span diameter of check, see Figures A and B.
- 1/2" – 13 x 5" fully threaded hex bolt (Service bolt).
- 3/4" open end or socket wrench.

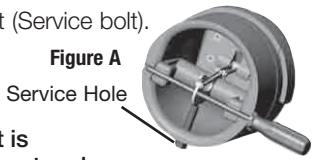

Figure A

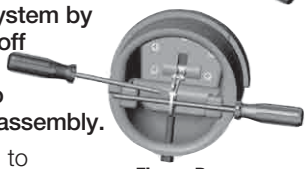

Figure B

Instructions:

Prior to servicing any Watts valve, it is mandatory to shut down the water system by closing both the inlet and outlet shutoff valves. After shutoff valves are closed, open test cock #2, #3 & #4 to relieve pressure within the backflow assembly.

1. After #3 test cock has been opened to relieve pressure, remove #3 test cock from housing. When repairing an 8" or 10" (200 – 250mm) device, remove both Victaulic couplers from body. Slide the downstream Victaulic coupler gasket to the downstream side of the housing. The upstream Victaulic coupler gasket stays in place.
2. Remove check/s to be serviced.
3. Locate the service hole and thread in the service bolt by hand until it contacts the linkage. (Figure A)
4. Continue to thread in service bolt with the wrench until the service hole in the linkage is aligned with the service notches on the spring arbors. (Figure A)
5. Insert the Phillips screwdriver through the arbors and service hole of the linkage making sure that the tip of the screwdriver extends past the ends of the arbors by a minimum of 1/4" (6mm). (Figure B)
6. Back out the service bolt until load is transferred to the screwdriver. Continue to back out the service bolt until sufficient clearance is achieved to remove the complete spring mechanism.
7. To disconnect linkage, remove retaining clip and pin (store in a safe location for reinstallation).
8. To remove spring mechanism, grasp the screwdriver at the center and pull complete assembly straight out and store in a safe place.
9. Reinstall in reverse order.

WARNING:

While the spring mechanism is removed for check servicing; never pull the screwdriver out or off the support notches on the arbors. Doing so may cause bodily injuries.

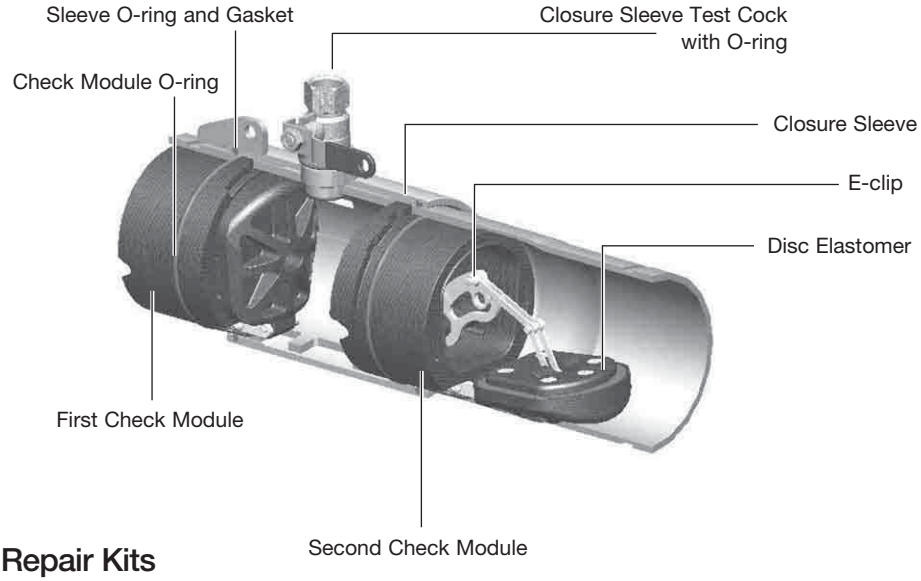

Repair Kits

1st Check Kits

ORDERING NO.	SIZE in.	SIZE mm	DISC	MODEL
7018128	2½ - 4	65-100	RED SILICONE	RK 757/757DCDA CK1
7018131	6	150	RED SILICONE	RK 757/757DCDA CK1
7018134	8	200	RED SILICONE	RK 757/757DCDA CK1
0899200	10	250	RED SILICONE	RK 757/757DCDA CK1

Kit consists of: First check module, Check module O-ring and Disc elastomer

2nd Check Kits

ORDERING NO.	SIZE in.	SIZE mm	DISC	MODEL
7018130	2½ - 4	65-100	RED SILICONE	RK 757/757DCDA CK2
7018133	6	150	RED SILICONE	RK 757/757DCDA CK2
0899206	8	200	RED SILICONE	RK 757/757DCDA CK2
0899201	10	250	RED SILICONE	RK 757/757DCDA CK2

Kit consists of: Second check module, Check module O-ring and Disc elastomer

1st or 2nd Check Rubber Parts Kits

ORDERING NO.	SIZE in.	SIZE mm	DISC	MODEL
0899202	2½ - 4	65-100	RED SILICONE	RK 757/757DCDA RC4
0899203	6	150	RED SILICONE	RK 757/757DCDA RC4
0899204	8	200	RED SILICONE	RK 757/757DCDA RC4
0899205	10	250	RED SILICONE	RK 757/757DCDA RC4

Kit consists of: Check module O-ring, Disc elastomer and E-clip

Check Sleeve Cover Kits

ORDERING NO.	SIZE in.	SIZE mm	DISC	MODEL
0899211	2½ - 4	65-100	–	RK 757/757DCDA C
0899212	6	150	–	RK 757/757DCDA C
0899213	8	200	–	RK 757/757DCDA C
0899214	10	250	–	RK 757/757DCDA C

Kit consists of: Closure sleeve, Sleeve O-ring and Gasket

***The wetted surface of this product contacted by consumable water contains less than 0.25% of lead by weight.**

Troubleshooting Guide

Series 757, 757DCDA & LF757DCDA

Symptom	Cause	Solution
1. Check valve fails to hold 1.0 PSID minimum	a. Debris on check disc sealing surface	Disassemble and clean
	b. Leaking gate valve	Disassemble and clean or repair
	c. Damaged seat disc or seat o-ring	Disassemble and replace
	d. Damaged guide holding check open	Disassemble and clean or replace
	e. Weak or broken spring	Disassemble and replace spring
2. Chatter during flow conditions	a. Worn, damaged or defective guide	Disassemble and repair or replace guide
3. Low flows passing through mainline valve	a. Mainline check fouled	Disassemble and clean
	b. Meter strainer plugged	Disassemble and clean
	c. Damaged mainline seat disc or seat	Disassemble and replace
	d. Broken mainline spring	Disassemble and replace

For additional cross-connection control information, send for F-50 brochure.

CALIFORNIA PROPOSITION 65 WARNING

WARNING: This product contains chemicals known to the State of California to cause cancer and birth defects or other reproductive harm. (California law requires this warning to be given to customers in the State of California.)

For more information: www.watts.com/prop65

Limited Warranty: Watts Regulator Co. (the "Company") warrants each product to be free from defects in material and workmanship under normal usage for a period of one year from the date of original shipment. In the event of such defects within the warranty period, the Company will, at its option, replace or recondition the product without charge.
THE WARRANTY SET FORTH HEREIN IS GIVEN EXPRESSLY AND IS THE ONLY WARRANTY GIVEN BY THE COMPANY WITH RESPECT TO THE PRODUCT. THE COMPANY MAKES NO OTHER WARRANTIES, EXPRESS OR IMPLIED. THE COMPANY HEREBY SPECIFICALLY DISCLAIMS ALL OTHER WARRANTIES, EXPRESS OR IMPLIED, INCLUDING BUT NOT LIMITED TO THE IMPLIED WARRANTIES OF MERCHANTABILITY AND FITNESS FOR A PARTICULAR PURPOSE.
The remedy described in the first paragraph of this warranty shall constitute the sole and exclusive remedy for breach of warranty, and the Company shall not be responsible for any incidental, special or consequential damages, including without limitation, lost profits or the cost of repairing or replacing other property which is damaged if this product does not work properly, other costs resulting from labor charges, delays, vandalism, negligence, fouling caused by foreign material, damage from adverse water conditions, chemical, or any other circumstances over which the Company has no control. This warranty shall be invalidated by any abuse, misuse, misapplication, improper installation or improper maintenance or alteration of the product.
Some States do not allow limitations on how long an implied warranty lasts, and some States do not allow the exclusion or limitation of incidental or consequential damages. Therefore the above limitations may not apply to you. This Limited Warranty gives you specific legal rights, and you may have other rights that vary from State to State. You should consult applicable state laws to determine your rights. **SO FAR AS IS CONSISTENT WITH APPLICABLE STATE LAW, ANY IMPLIED WARRANTIES THAT MAY NOT BE DISCLAIMED, INCLUDING THE IMPLIED WARRANTIES OF MERCHANTABILITY AND FITNESS FOR A PARTICULAR PURPOSE, ARE LIMITED IN DURATION TO ONE YEAR FROM THE DATE OF ORIGINAL SHIPMENT.**

WATTS®

ISO 9001-2008 CERTIFIED

A Watts Water Technologies Company

USA: Tel: (978) 688-1811 • Fax: (978) 794-1848 • www.watts.com
Canada: Tel: (905) 332-4090 • Fax: (905) 332-7068 • www.wattscanada.ca

 © 2012 Watts