PART NAME	MATERIAL
GLAND	STEEL
CAPSCREW	STEEL
COVER	IRON
PLUG	CAST IRON A126 GR B
BODY	CAST IRON A126 GR B

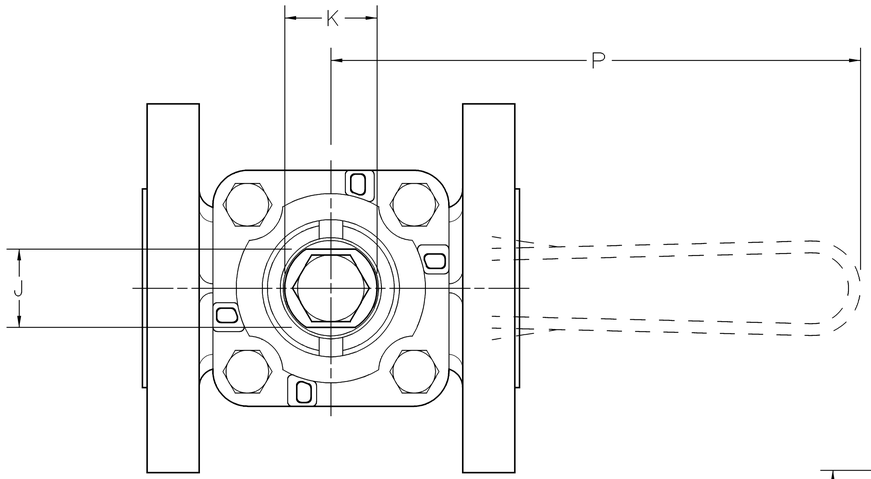

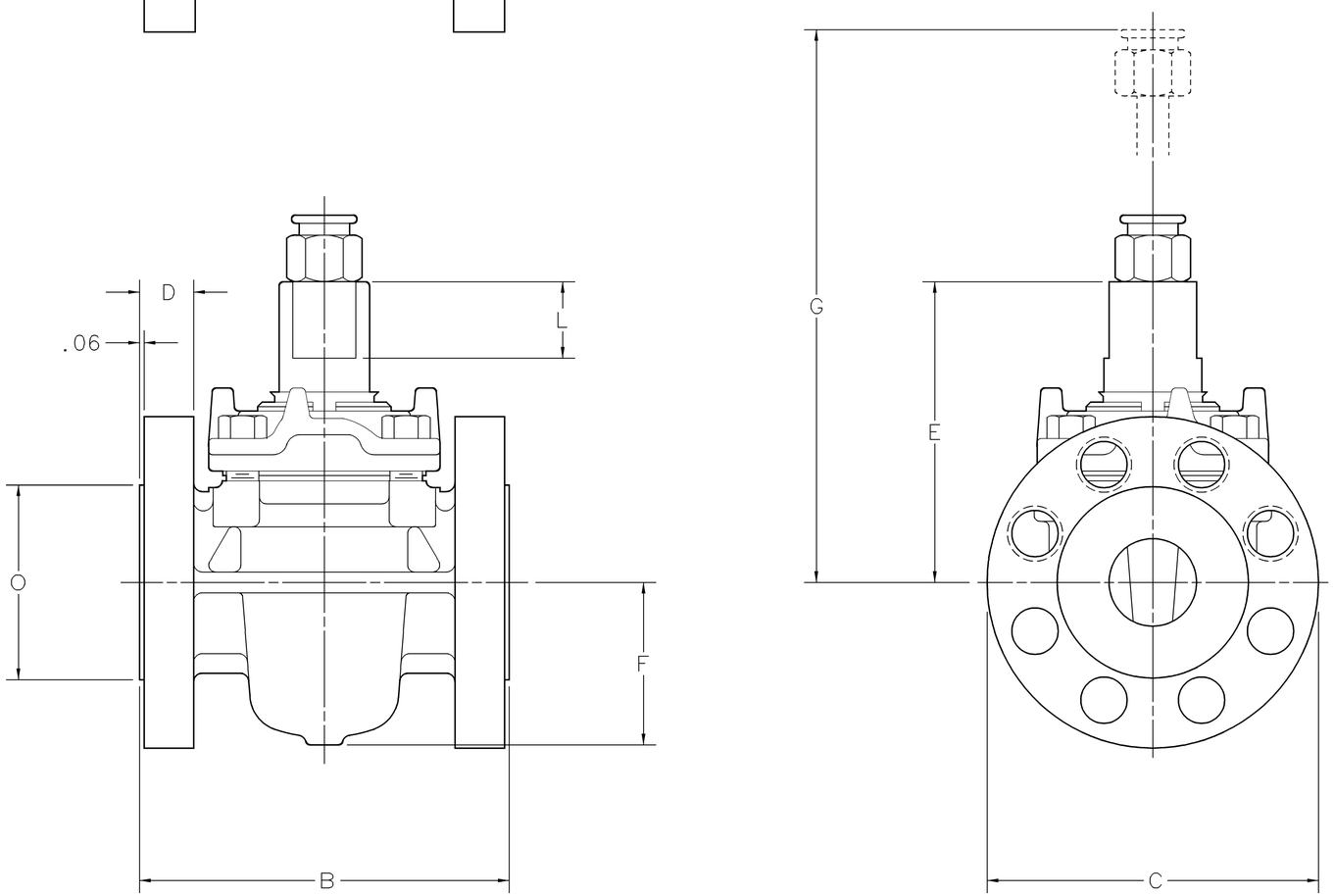

DIMENSIONS-ENGLISH UNITS FOR 400 CWP (FIG 305)			
NOMINAL VALVE SIZE	2	3	4
B FACE TO FACE	7.25	9.25	10.50
C DIAMETER OF FLANGES	6.50	8.25	10.00
D THICKNESS OF FLANGE	1.06	1.19	1.50
NO. OF TAPPED HOLES IN EACH FLANGE	4	2	–
SIZE OF TAPPED HOLES	5/8"	3/4"	–
E CENTER OF PORT TO TOP OF SHANK	5.66	7.00	7.47
F CENTER OF PORT TO BOTTOM OF BODY	3.25	4.25	4.75
G SEALANT FITTING REMOVAL CLEARANCE	8.28	9.62	10.09
J WIDTH OF STEM FLATS	1.12	1.37	1.37
K DIAMETER OF STEM SHANK	1.59	1.97	1.97
L HEIGHT OF STEM FLATS	1.44	1.78	1.78
O DIAMETER OF RAISED FACE	4.12	5.62	6.87
P LENGTH OF WRENCH	14.00	21.00	21.00
SIZE OF WRENCH	K-8	M-8	M-8
WEIGHT IN LB. (APPROX)	37	75	105
SIZE OF STICK SEALANT	B	B	B

DIMENSIONS-METRIC UNITS FOR 28 BAR (FIG 305)			
NOMINAL VALVE SIZE	50	80	100
B FACE TO FACE	184.1	234.9	266.7
C DIAMETER OF FLANGES	165.1	209.5	254.0
D THICKNESS OF FLANGE	26.9	30.2	38.1
NO. OF TAPPED HOLES IN EACH FLANGE	4	2	–
SIZE OF TAPPED HOLES	**	**	–
E CENTER OF PORT TO TOP OF SHANK	143.7	177.8	189.7
F CENTER OF PORT TO BOTTOM OF BODY	82.5	107.9	120.6
G SEALANT FITTING REMOVAL CLEARANCE	210.3	244.5	256.4
J WIDTH OF STEM FLATS	28.6	34.9	34.9
K DIAMETER OF STEM SHANK	40.5	50.0	50.0
L HEIGHT OF STEM FLATS	36.5	45.2	45.2
O DIAMETER OF RAISED FACE	104.7	142.9	174.6
P LENGTH OF WRENCH	355.0	533	533
SIZE OF WRENCH	M-8	M-8	M-8
WEIGHT IN KG. (APPROX)	17	34	48
SIZE OF STICK SEALANT	B	B	B

** REFERENCE ENGLISH DIMENSION

NOTES:

1. DIMENSIONS SHOWN ARE NOMINAL, PROVIDED FOR GENERAL INFORMATION AND AS SUCH ARE SHOWN WITHOUT TOLERANCE.
2. DIMENSIONS SUBJECT TO CHANGE WITHOUT NOTICE.
3. DIMENSIONS IN INCHES AND MILLIMETERS.
4. FLANGES ARE DRILLED TO ANSI CLASS 250 CAST IRON FLANGE DRILLING.

BY/DATE	CHANGE NOTICE NO	REV

61

NORDSTROM VALVES, INC.

SULPHUR SPRINGS, TEXAS

NORDSTROM VALVE
FIGURE 305

SUPERSEDES: C-57971 10-7-74			REF DWG:	
DRWN	CHKD	APPD	SCALE: NONE	DATE:02-20-91
DEH			D-57969	

D-57969