American Meter Series 1800C & 1800C-HC Service Regulators

Models 1813C, 1813C-HC, 1843C & 1843C-HC

Operating Instructions Manual



Model 1813C ✓



Model 1843C



Model 1843C-HC

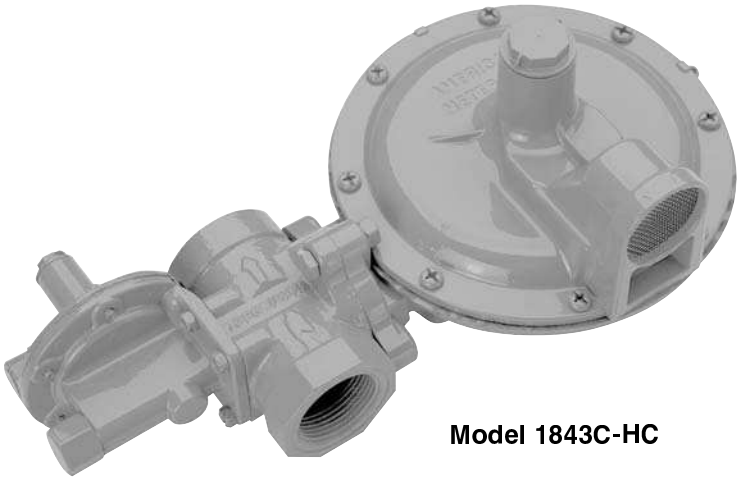

Model 1843C-HC

www.americanmeter.com

AMC Quality System
QMI is Accredited by:

ISO 9001 Certified
Certificate #006697

Dutch Council
for Accreditation

American Meter Company
Measurement Engineers Since 1836

1800C & 1800C-HC Service Regulators

General Information:

The 1800C and 1800C-HC Regulators are available as Full Capacity Internal Relief Models. Series 1800C and 1800C-HC Regulators are also available with overpressure shut-off protection.

Available valve body sizes: 3/4" x 3/4", 3/4" x 1", 3/4" x 1-1/4", 1" x 1", 1" x 1-1/4", 1-1/4" x 1-1/4" NPT or BSP-TR.
Also available as Offset Valve Body in 3/4" x 3/4", 3/4" x 1", 1" x 1" NPT or BSP-TR.
1800C-HC is available with 1-1/4" valve body only.
Maximum inlet pressure, normal service (P1): Depending on orifice size, up to 125 PSIG.
Maximum outlet set pressure, normal service (P2): Depending on spring selection, up to 2 PSIG (56" W.C.).

Orifice Sizes

Orifice Size *	Part Number	
	Standard	w/ OPSO
9/16"	72494P026	72751P019
1/2"	72494P025	72751P016
3/8"	72494P023	72751P014
5/16"	72494P022	72751P013
1/4"	72494P021	72751P012
3/16"	72494P020	72751P011
1/8" x 3/16"	72494P030	72751P020
1/8"	72494P019	N/A

*See brochure SB-8515 for maximum inlet recommendations and capacity performance for each orifice size.

Pressure Springs

Outlet Pressure Range	Color Code	Part Number
3.5" to 6" W.C.	Blue	70017P043
3.5" to 7.5" W.C.	Tan	70017P089
5.5" to 8.5" W.C.	Yellow	70017P044
6" to 15" W.C.	Purple	70017P042
12" to 28" W.C.	White	70017P060
24" to 48" W.C.	Red	70017P082
42" W.C. to 2.0 PSIG	Red-Red	70017P049

Preparations:

Caution:

Do not connect the inlet of the regulator to a normal pressure source higher than that recommended. Never connect the regulator outlet to the source of pressure. Observe the flow direction arrow on the valve body. If inlet pressure can exceed the maximum regulator outlet pressure rating, some form of overpressure protection in addition to internal relief may be required. To prevent damage to the regulator and possible personal injury, inlet and outlet pressures must not exceed the regulator pressure rating stated on page 4.

1. Install, operate, inspect and maintain the regulator as outlined in the following instructions and in accordance with your company's policies and applicable federal, state and local codes and laws. Failure to follow these instructions may result in damage to the regulator or personal injury.
2. Check installation location for suitability. It is possible that physical changes have been made to the building site since the regulator and location were originally selected.
3. Examine regulator for shipping damage.
4. Check regulator and piping for foreign matter which may have accumulated during shipment or handling.
5. Check seal plug information to determine if regulator is suitable for intended service.
6. Suitable stop valve(s) should be installed and should be conveniently located.
7. Filters are available from American Meter for applications where pipeline contaminant's are suspected to be present.
8. Regulators may be used at temperatures between -20˚ F and +150˚ F (-30˚ C and +65˚ C).

Installation:

(Numbers in parentheses refer to figure 1, page 3.)

Warning:

Inside Installation:
Will require a vent line of sufficient diameter to carry gas vented by the regulator to a safe outside location away from any opening in the building. For all sizes of regulators, a 1-inch NPT or BSP-TR is provided for a vent line. Do not thread a pipe into the vent more than 7 turns so as not to block the vent flapper.

Outside Installation:
Will require that care be taken to prevent vent opening from freezing closed or becoming blocked or permitting water to enter from any cause. Particular consideration should be given to sites where flooding, snow, or freezing rain may be experienced. The vent or vent line port should point vertically downward and overhead protection should be used where necessary.

1. Remove all shipping plugs.
2. Use good piping practice. Be sure piping and regulators are free of dirt, pipe dope and other debris. Apply pipe dope to male threads only.
3. Install regulator. Make certain it is piped correctly with inlet pipe connected to the inlet regulator connection and flow is in the direction as indicated by arrow located on valve body (19). The vent should be positioned to prevent entry of water and debris. American Meter recommends that the vent face downward. By removing the two bolts (5), the diaphragm case (8) may be rotated in 90 degree increments in relation to the valve body (19). Replace and tighten the bolts (5). Inside Installations - A regulator installed within a building should be located as near as practical to the point of service line entrance.
4. Turn gas on slowly. If an outlet stop valve is used, it should be open first. Do not overload the diaphragm with a sudden surge of inlet pressure.
5. Assure that there are no leaks and all connections are tight.
6. The 1800C Series regulator is preset at the factory with the diaphragm in the horizontal position and should not require any adjustment if installed in that position. The outlet pressure may vary as much as 0.5" W.C. if the regulator is installed in the vertical position. Should you decide to adjust the set pressure, perform the following:
   (a) Turn gas off and depressurize the system.

(b) Install outlet pressure gauge. Remove seal plug (14).
(c) Turn gas on slowly.
(d) Establish a low flow rate - 45 to 55 SCFH.
(e) Turn pressure spring adjustment screw (9) clockwise to increase outlet pressure or counterclockwise to decrease outlet pressure.
(f) Establish the set pressure within the range limits of the pressure spring used.
(g) To test for the regulator's ability to fully shut off (lock-up), shut off all flow downstream of the regulator. At lock-up, the outlet pressure will be somewhat higher than the set pressure. However, if the pressure continues to rise after 3 seconds, the regulator must be repaired. Observe for 30 seconds.
(h) When the set pressure has been properly adjusted, depressurize and remove gauge(s) and lines.
(i) Replace seal plug (14).
(j) Pressurize and check all connections for leaks.

Inspection:

(Numbers in parentheses refer to figure 1.)

Inspection and maintenance of the 1800C and 1800C-HC Series regulator has been simplified for practical reasons. Repair parts are offered if maintenance of the regulator is required.
Inspection of the valve seat disc (1) and orifice valve (7) may be performed in the field. Follow the procedure described below. Care should be exercised to prevent foreign matter from entering the regulator.
Procedure for Inspection of Valve Seat Disc and Orifice

1. Shut off gas supply and depressurize the regulator system.
2. Remove two bolts (5) securing the diaphragm case (8) to the valve body (19) and separate the diaphragm case from the valve body.
3. Visually check the seating edge of the orifice (7). If it is nicked or damaged, it should be replaced with a new orifice to provide proper shutoff. See Maintenance instructions for replacing the orifice.
4. Inspect the surface of the valve seat disc (1). If it is scored or uneven replace it as outlined in the Maintenance instructions.
5. Install new seal ring (2) in the diaphragm case groove.
6. Inspect unit for cleanliness and proper positioning of the parts. Pay particular attention to the proper positioning of the seal ring (2) in the groove.
7. Install the diaphragm case (8) on the valve body (19). Make sure the vent is pointed downward. Replace and tighten the valve body bolts (5).
8. Proceed to Steps 4, 5 and 6 of the installation instructions.

Caution:

Regulators are pressure control mechanisms having numerous moving parts which can wear. In addition, regulator damage may occur from external sources. For these reasons, the regulator should be periodically inspected and checked for proper operation. The frequency of inspection will depend on the severity of the service conditions and the requirements of applicable local, state and federal codes and regulations.

Maintenance:

(Numbers in parentheses refer to figure 1.)

Replacing Seat Disc:

1. Carefully insert the tip of a knife along the edge of the seat disc (1) and lift the seat disc out of the plunger (17).
2. Install a new seat disc (1) into the plunger (17), by pressing into place. Make sure that the disc is pressed completely into the plunger (17).
3. Proceed to Steps 5, 6, 7 and 8 of the Inspection Instructions.

Caution:

Handling and Disposal

"As a knowledgeable user of American Meter's products, we are sure that you are aware that parts in the Company's meters and regulators contain or are coated with heavy metals such as cadmium, zinc, lead and chromium. Obviously, therefore, repair or refurbishment of this equipment should take into account the presence of these materials and should comply with all state and federal requirements concerning worker protection, proper disposal and safety, including protection against exposure to dust and fumes."

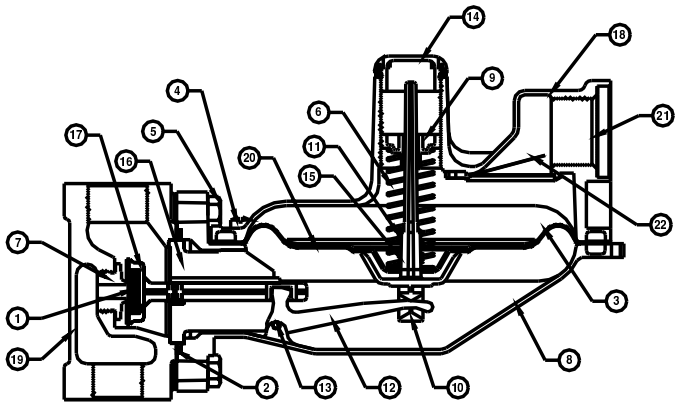

Figure 1 (1813C & 1813C-HC Regulator)

Item No.	Description	Item No.	Description
1	Disc, Valve Seat	12	Lever
2	Seal Ring, Valve Body	13	Pin, Lever
3	Diaphragm	14	Plug, Seal
4	Screw, Diaphragm Case	15	Spring, Relief Valve
5	Bolt, Valve Body	16	Guide, Valve Plunger
6	Spring, Pressure	17	Plunger, Valve
7	Valve, Orifice	18	Assembly, Top
8	Diaphragm Case	19	Valve, Body
9	Screw, Pressure Adjustment	20	Plate, Diaphragm
10	Stem	21	Screen, Vent
11	Retainer, R.V. Spring	22	Vent Valve

1800C & 1800C-HC Service Regulators

Replacing Orifice:

(Numbers in parentheses refer to figure 1, page 3.)

CAUTION:

Regulators that have an orifice size change different than shown on the seal plug or tag must have their set pressure reestablished. Mark new orifice size and set pressure on the regulator seal plug or on its tag.

1. Shut off gas supply and depressurize the regulator system.
2. Remove two bolts (5) securing the diaphragm case (8) to the valve body (19). Place the diaphragm case aside and protect the seat disc from dirt particles.
3. Remove the orifice valve (7) with a 7/8" hex socket wrench.
4. Sparingly apply Henkell G30 or Loctite "Stainless Steel PST" thread sealant or equivalent (not supplied) to the new orifice threads.
5. Carefully start the threads of the orifice into the valve body and tighten to specification. Care must be taken to prevent nicking the orifice.
6. Proceed to Steps 5, 6, 7 and 8 of the Inspection

Replacing Pressure Spring:

(Numbers in parentheses refer to figure 1, page 3.)

Caution:

Regulators that have a pressure spring removed or replaced must have their set pressure reestablished. If the pressure spring is different from that shown on the seal plug or tag, mark spring range on the regulator seal plug or on its tag, and cross out the old value.

1. Shut off gas supply and depressurize the regulator system.
2. Remove seal plug (14).
3. Unscrew pressure adjusting screw (9) with a 3/8" screwdriver and remove the pressure adjusting screw completely.
4. Remove the pressure spring (6). Install new pressure spring.
5. Replace the pressure adjusting screw and turn adjusting screw to about mid position.
6. Proceed to Steps 4, 5 and 6 in Installation Instructions.

Resetting The OPSO:

(For 1843C and 1843C-HC only.)
(Numbers in parentheses refer to figure 2.)

1. Shut off gas supply and depressurize the regulator system.
2. Unscrew the OPSO lower diaphragm case cap (body plug) (1).
3. Pull back the knurled plunger (2) until the diaphragm stem (3) repositions (an audible click).
4. Replace the OPSO diaphragm case cap (body plug) (1) after examining the o-ring (4) for damage.
5. Proceed to Steps 4 and 5 in Installation instructions.

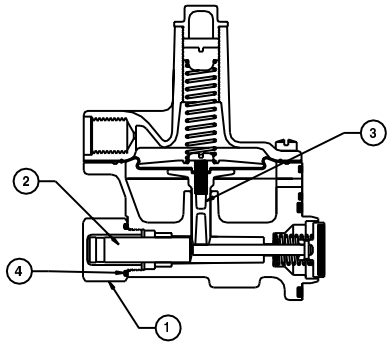

Figure 2.

Operation & Resetting The Jeavons USSA:

1. For USSA operations on models 1853C and 1853C-HC w/ Jeavons see brochure SB-8556.

Regulator Pressure Rating

125 PSIG = Maximum recommended inlet pressure for normal service. Maximum recommended pressure may vary with orifice size.

175 PSIG = Maximum inlet pressure for abnormal or emergency service, without causing damage to regulator case.

2 PSIG = Maximum outlet pressure for normal service.

10 PSIG = Maximum outlet pressure which can be contained by pressure carrying components (no flange leakage to atmosphere except for normal relief action). **If regulator is subjected to these conditions, it should be removed from service.**

50 PSIG = Maximum outlet pressure for abnormal service without damage to internal components. **If regulator is subjected to these conditions, it should be removed from service.**

Due to continuous development the information in this document is subject to change.

AMERICAN METER
300 Welsh Road, Building One ● Horsham, PA 19044-2234 ● USA ● Tel: (215) 830-1800 ● Fax: (215) 830-1890

CANADIAN METER
3037 Derry Road, West ● Milton, Ontario L9T 2X6 ● Canada ● Tel: (905) 878-2361 ● Fax: (905) 878-5758

ELSTER AMCO