PART/PRINT #:	PART DESCRIPTION:	SCALE:	REVISION:	DATE:
AKP35025	POLYPRO BASIN 18X22 MULTI DRAIN HOLES	NOT TO SCALE	001	8/29/03

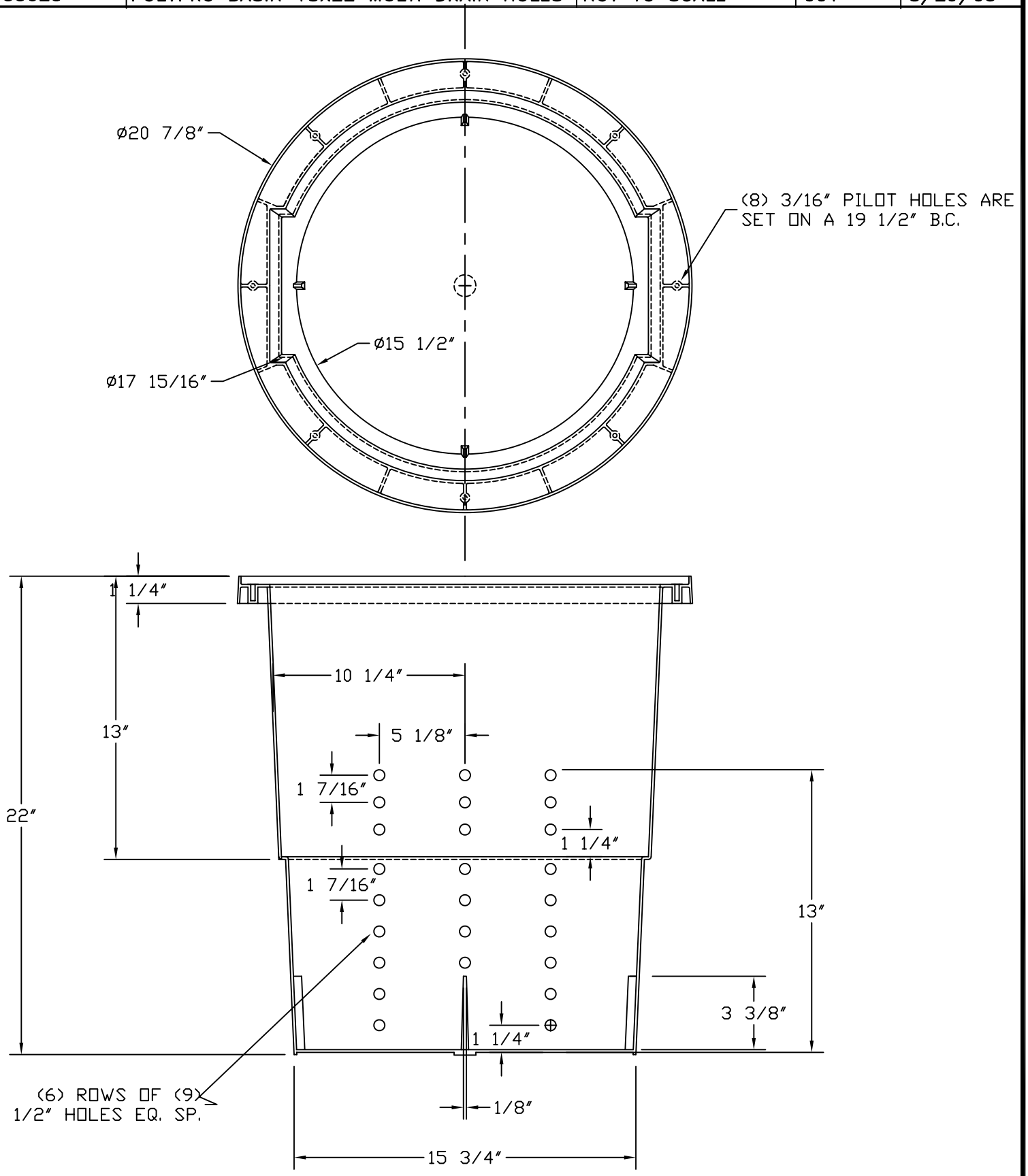

THIS DRAWING IS THE SOLE PROPERTY OF AK INDUSTRIES INC.

B.O.M
AKR50005 PRO 18X22

AK INDUSTRIES INC. 2055 PIDCO DR. PLYMOUTH, IN. 46563 PHONE:(574) 936-6022	DRAWN BY: M.OLIVAREZ	TOLERANCE: ± 0.0312 UNLESS SPECIFIED OTHERWISE	SIGNATURE: