CHRONOMITE INSTANT-FLOW SR WATER HEATER
INSTALLATION AND OPERATION INSTRUCTIONS (STANDARD FLOW MODELS)

(Before installation, compare electrical needed for the model of heater selected)

TABLE 1

Model No.	Wattage	Voltage	Breaker Size
SR-30	6240	208	30A
SR-30	7200	220/240	30A
SR-30	8310	277	30A
SR-40	8320	208	40A
SR-40	9600	220/240	40A

Instant-Flow SR Specifications:

- Dimensions: 6¼" x 9 5/8" x 2 ¾"
- Weight: 5 lbs.
- Materials: Rugged cast aluminum alloy casing, Celcon waterways with nichrome parts
- Color: White (unless stainless housing)
- Pipe Fittings: Female ¼" NPT standard pipe thread
- Pressure Requirements: 25 PSI Minimum, 150 PSI Maximum (300 PSI tested) No pressure relief valve needed unless required by local codes.
- Maximum Operating Temp: 140°F
- Minimum Operating Flow Rate: .65 GPM
- Minimum Operating Flow Rate: 1.0gpm for Model SR-40-220/240
- Listings: UL, HUD, IAPMO

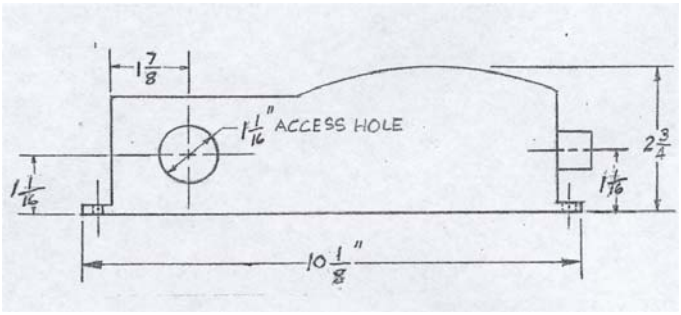

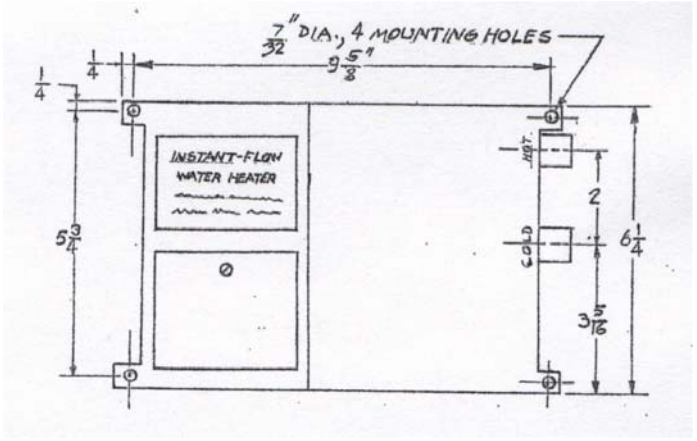

THE MANUFACTURER OF THIS WATER HEATER WILL NOT BE LIABLE FOR ANY DAMAGES DUE TO THE FAILURE TO FOLLOW THESE INSTALLATION AND OPERATION INSTRUCTIONS.

CAUTION: BEFORE BEGINNING THE INSTALLATION:

A) Turn off the circuit breaker to avoid dangerous electrical shocks.

B) Turn off the water supply.

1. Remove electrical access cover. Attach conduit to the conduit access hole. Then feed wires. Do not attach wiring.
2. Mount unit horizontally against the wall so the silver label reads correctly (See Fig. 1). Mount with four screws through the flanges located on each corner using molly anchors or fasteners.
   CAUTION: Heating elements may burn out if unit is not mounted horizontally.
3. Connect plumbing. Use ¼" tapered national pipe thread at cold water inlet and hot water outlet (See Fig. 1). Use compression fittings supplied for ease of installation. Do not apply heat to these fittings.
4. Run water through the unit to expel all air bubbles. Check for leaks at all fitting joints.
5. Connect wiring. Attach ground wire to center terminal and hot wires to outer terminals (See Fig. 3)
6. Replace electrical access cover. Turn on the circuit breaker. The unit is now ready for use.
7. Local plumbing and electrical codes must be followed in the installation of this water heater and it's accessories.
8. Failure to comply with code requirements voids the warranty.
9. Failure to install faucet flow control as shown on Fig. 2 will cause unsatisfactory operation of the heater.

IMPORTANT NOTES: Air in the heater may cause the elements to burn out. If the water lines are drained, allowing air into the heater, be sure to follow the following start-up procedure:

1. Turn off electrical supply – open circuit breaker.
2. Turn on water supply.
3. Expel all air from lines and heater.
4. Turn on electrical power supply – close circuit breaker.

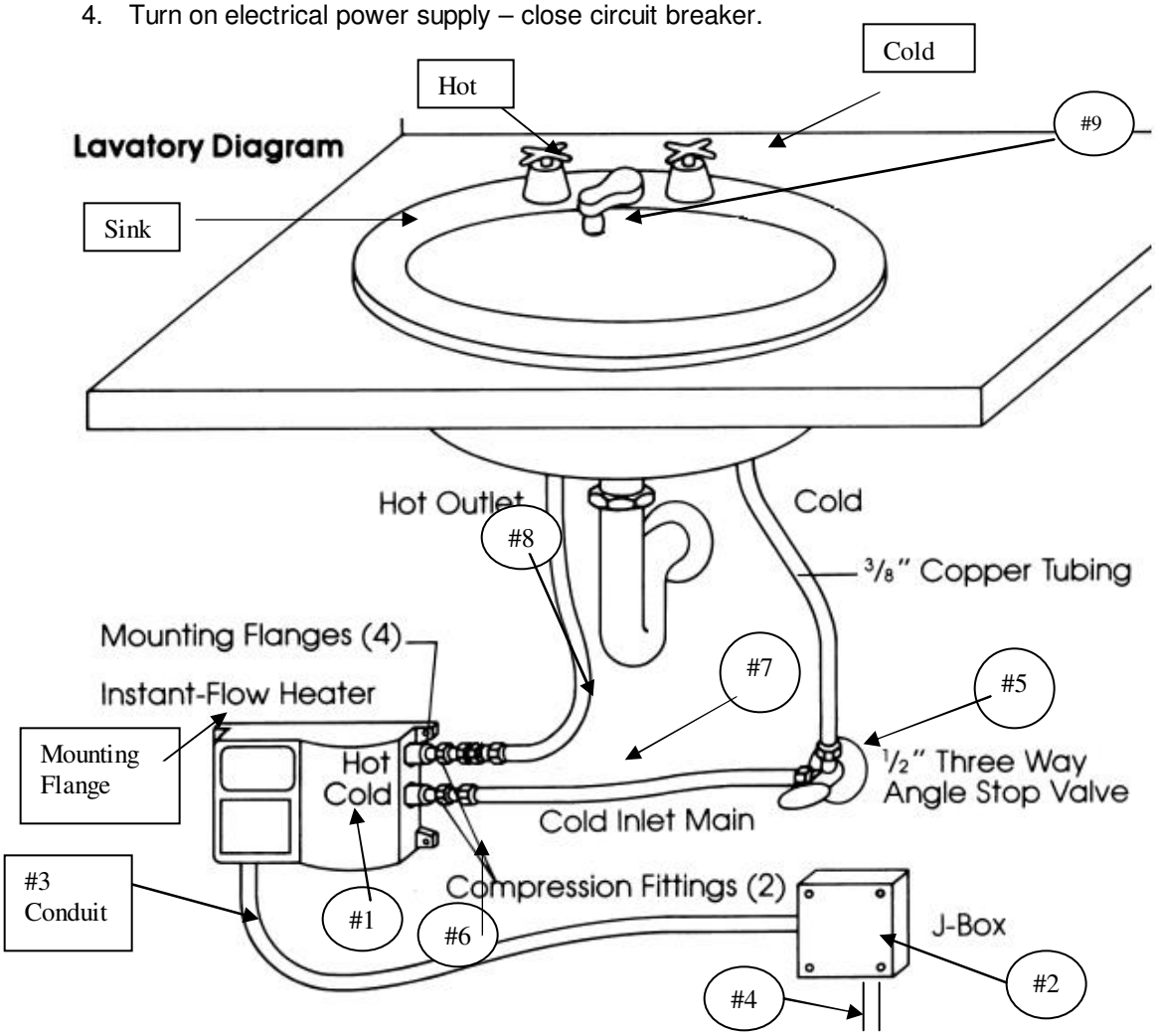

FIGURE 1 HEATER INSTALLATION

Faucet flow controls must be attached to the faucet to allow the water heating system to operate more effectively (See Fig. 2, pg. 3 for installation).

Item	Part No.	Names	Qty	Description
1.	SR-_ _	Chronomite Instant-Flow SR Heater	1	Models shown in Table 1
2.		Electrical junction box		
3.		Electrical conduit		½" conduit, length as required
4.		Electrical wire		Electrical Wire
5.		Dual outlet angle valve	1	½" FPx7/16" comp.x3/8 comp., Brass Craft P/N R2701R-RGH
6.		Fitting (supplied)	2	3/8" comp x ¼"MP
7.		Copper or flex tubing	1	3/8" OD, length as required (keep short)
8.	A-412	Faucet flow control (supplied)	1	dual thread 15/16" male thread or 55/64" female thread (See Figure 2)

OPERATION INSTRUCTIONS

Turn the hot water fixture to activate the flow switch. The flow switch activates at one gallon per minute (GPM) and deactivates at .65 gallon per minute (GPM).

If you increase the flow rate of the water the water temperature will become cooler. Cold water can always be mixed just as with a conventional system if using a two handle faucet.

Once you decrease the flow rate to .65 GPM the unit will deactivate. It is not advisable to operate the heaters at .65 GPM.

>Periodically inspect the supply lines, connections and heater for any moisture, corrosion or other potential preventable problems.

HOW INSTANT-FLOW **SR** WORKS

The cast alloy case houses a series of ingeniously designed coils that instantly heat water as it flows through the vessel. A unique power switch automatically applies electrical current to the coils when hot water is requested. The electrical current is not applied when the water is not in use.

FLOW CONTROL SPECIFICATIONS

Material: Chrome plated, brass housing.
Threading: MODEL A-412 has male/female threads for faucets with 15/16" female or 55/64" male threads.

*Flow controls are adaptable to other thread configurations.
Please call factory If adapter is needed.

FLOW CONTROL MODELS

Model	GPM	Vandal Proof Models	GPM
A-412 (Dual)	2.0	A-910VR (Female)	2.0

FIGURE 2
FLOW CONTROL INSTALLATION (See Parts List #9)

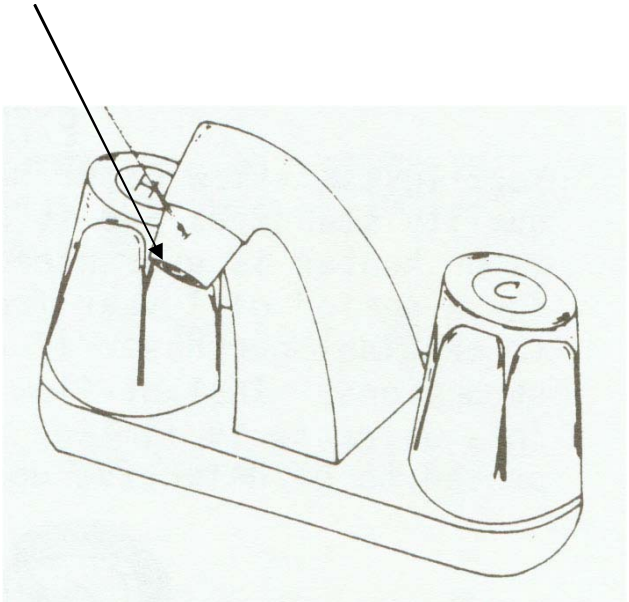

TEMPERATURE INCREASE ABOVE INCOMING WATER TEMPERATURE

MODEL	VAC	0.65 GPM	1.0 GPM operating flow rate	1.50 GPM
SR-30	208	66 °F	42 °F	28°F
SR-30	240	64 'F	49 'F	33°F
SR-30	277	64 °F	57 °F	38 °F
SR-40	208	87 °F	57 °F	38 °F
SR-40	240	XXXX	65 °F	44 °F

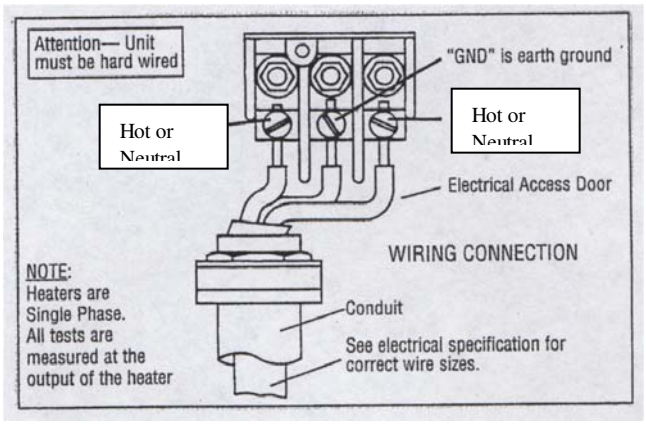

TROUBLESHOOTING GUIDE

Your Instant-Flow SR water heater has no internal user serviceable parts and should be returned to the factory for repair or replacement. Please contact factory for return authorization. If after following the Installation Instructions, your Instant-Flow SR does not heat water in accordance with this literature, please check the following:

1. **Low Power** – Verify your voltage by using a voltage meter. You should obtain your reading off the two outside terminals located on the heater. Compare the reading against the voltage specified in the Installation Instructions. The center terminal is always the earth ground.
2. **Low Voltage** – The percentage of reduction in voltage will result in a like reduction in temperature increase.
3. **Check Low Amperage Draw** – Check amperage draw using an Amperage Probe. Please compare your results with the Installation Instructions (Table 1) to determine if the heater is operating correctly.
4. **Length of Pipe** - Length of pipe run will affect the temperature increase. The heater should be mounted no more than 12-18 inches from the point of use.
5. **Check shut – off valve** – Check shut-off valve and make sure valve is open 100% to allow full water pressure to the heater.
6. **Check Flow Rate** – Controlling flow rate is essential to insure proper temperature increase. In the case of the low flow rate heater it is mandatory that the flow control be attached to the end of the faucet. Check your flow rate to insure proper operation of the heater. Standard Flow Rate Models require 1.0 GPM to activate.
7. **Installation** – Heater must be installed in a horizontal position. The silver label will then be located in the upper left corner as you face the heater.
8. **Water Supply** – Cold Water supply to only feed Instant-Flow SR cold water inlet.
9. **Freezing** – Instant-Flow SR heaters must be drained and stored if installed in a location subject to freezing. Disconnect the inlet/outlet compression fittings and blow air through one side of the heater to assist draining. Failure to completely remove water from the unit will result in freezing and cracking.
10. **Problems?**- Call our toll-free hotline 800/447-4962 or 626/937-4270.

EXCLUSIVE 12-MONTH WARRANTY

Your Instant-Flow SR water heater has been engineered and built to the highest quality standards and is backed by a full, factory warranty. Every Instant-Flow SR water heater is guaranteed to be free from defects in material and workmanship for a period of (1) year from the date of purchase. The above warranty applies to original purchaser if unit is installed per Chronomite Laboratories, Inc.'s Installation Instructions. Chronomite Laboratories, Inc. will repair or exchange parts at the factory at no cost. This warranty is limited to repairing or replacing said products which prove to be defective upon factory inspection, F.O.B. City of Industry, California.

Chronomite Laboratories Inc.
17451 Hurley Street
City of Industry, CA 91744
Toll Free Technical Hotline 800-447-4962
Telephone 626-937-4270