NO.	PART	MATERIAL
		BRONZE BODY

Model T-569

Venturi Tee

LEGEND VALVE

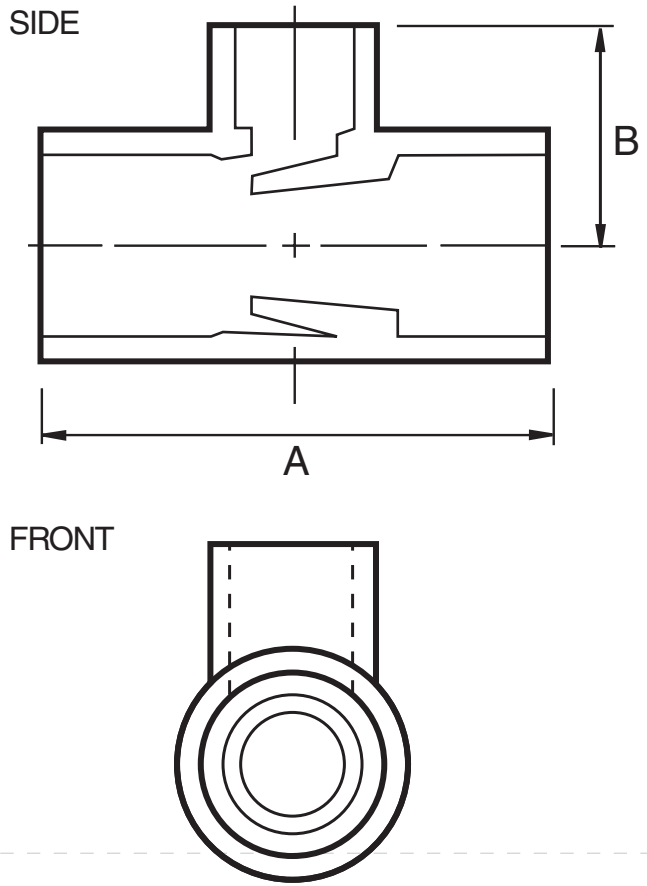

SIZE	3/4"x1/2"	1"x1/2"	1"x3/4"	1-1/4"x1/2"	1-1/4"x3/4"	
A	2.28	2.52	2.52	2.52	2.72	
B	1.06	1.16	1.24	1.32	1.36	

- NOTES: