Victaulic® Vic-300 MasterSeal™ Butterfly Valve
Series 761

08.20

10-Position Handle

Lever Lock Handle

Gear Operator

1.0 PRODUCT DESCRIPTION

Available Sizes

- 2 – 12"/DN50 – DN300

Maximum Working Pressure

- Accommodates pressures ranging from full vacuum (29.9 in Hg/760 mm Hg) up to 300 psi/2100 kPa/21 bar
- Full working pressure for bi-directional, dead end services

NOTE

- Before start up, the test pressure may be increased to 1 ½ times the maximum working pressure. This is for a one-time system test and must be performed at ambient conditions.

Operating Temperature

- Dependent on seat selection from section 3.0

Application

- For use in carbon steel, ductile iron, and plastic piping systems. When used with other piping materials, the system designer shall confirm the materials utilized are acceptable for use with the intended application.

NOTE

- Not recommended for use in potable water systems using stainless steel piping or copper tubing. Refer to publication 17.40: Victaulic Vic-300 MasterSeal™ Stainless Steel Butterfly Valve – Series 461 or publication 22.14: Victaulic Copper Connection Butterfly Valve – Series 608N for more information.

Actuation Options

- Standard ISO 5211 mounting flange (2 – 12"/DN50 – DN300)
- ISO 5211 mounting flange with ISO 5211 diagonal square head drive (2 – 12"/DN50 – DN300)
- 10-position handle (2 – 6"/DN50 – DN150)
  - Infinitely variable service with memory stop; Padlockable
- Lever lock handle (8 – 12"/DN200 – DN300)
  - Infinitely variable service with memory stop; Padlockable
- Gear operator (2 – 12"/DN50 – DN300)
- Additional 2"/50 mm neck extension available when more than 2"/50 mm of insulation is needed (2 – 8"/DN50 – DN200)
- 4 ½"/120 mm-long handle wheel input shaft extension (2 – 8"/DN50 – DN200)
- 3 ½"/90 mm-long handle wheel input shaft extension (10 – 12"/DN250 – DN300)

ALWAYS REFER TO ANY NOTIFICATIONS AT THE END OF THIS DOCUMENT REGARDING PRODUCT INSTALLATION, MAINTENANCE OR SUPPORT.

 © 2022 Victaulic Company. All rights reserved.

2.0 CERTIFICATION/LISTINGS

BS EN 10311
CPR (UK)
2019 No. 465

EN 10311
CPR (EU)
No. 305/2011

The Series 761 in sizes 76.1 mm, 88.9 mm, 114.3 mm, 165.1 mm, 168.3 mm, 219.1 mm and 273.0 mm have CCC approval.
Valve construction and performance meet or exceed MSS-SP-67 requirements.
Compliant with Closure/Seat Leakage Rate A per EN 12266-1, EN 1074-1, EN 1074-2 and ISO 5208.

3.0 SPECIFICATIONS – MATERIAL

Series 761 Vic-300 MasterSeal™ Butterfly Valve

Body: Ductile iron conforming to ASTM A536, Grade 65-45-12.

End Face, 2 – 6"/DN50 – DN150: Ductile iron conforming to ASTM A536, Grade 65-45-12.

Seal Retainer, 8 – 12"/DN200 – DN300: Ductile iron conforming to ASTM A536, Grade 65-45-12.

Coating: Black alkyd enamel.

Disc: (specify choice)

- ☐ Standard: Ductile iron conforming to ASTM A536, Grade 65-45-12, with electroless nickel coating conforming to ASTM B733.
- ☐ Optional: Stainless steel, conforming to ASTM A351, Grade CF8M.
- ☐ Optional: 2 – 6"/DN50 – DN150 only – Aluminum bronze, Grade C95500.

Seat: (specify choice)

- ☐ **Victaulic EPDM**

  EPDM (Green color code). Temperature range –30°F to +230°F/–34°C to +110°C. NOT RECOMMENDED FOR PETROLEUM SERVICES OR STEAM SERVICES.

- ☐ **Victaulic Nitrile**

  Nitrile (Orange color code). Temperature range +10°F to +150°F/–12°C to +65°C. Not compatible for hot water services over +150°F/+66°C or for hot dry air over +140°F/60°C. NOT RECOMMENDED FOR HOT WATER SERVICES OR STEAM SERVICES.

- ☐ **Victaulic Fluoroelastomer**

  Fluoroelastomer (Blue color code). Temperature range +20°F to +300°F/–7°C to +149°C. NOT RECOMMENDED FOR STEAM SERVICES.

Stem:

- ☐ Standard: 416 stainless steel conforming to ASTM A582.
- ☐ Optional:[1] 17-4PH stainless steel conforming to ASTM A564.

Stem Seal Cartridge:

- ☐ Standard: C36000 brass.
- ☐ Optional:[1] 17-4PH stainless steel conforming to ASTM A564.

[1] Contact Victaulic for available material combination options.

 © 2022 Victaulic Company. All rights reserved.

3.0 SPECIFICATIONS – MATERIAL (CONTINUED)

Bearings: Fiberglass and 316 stainless steel with TFE lining.

Stem Seal: Furnished in same material as seat.

Stem Retaining Ring: Carbon steel.

10 Position Handle:

- ☐ For sizes 2 – 6"/DN50 – DN150: Zinc-plated carbon steel handle with zinc-plated carbon steel latch plate and zinc-plated carbon steel fasteners, infinitely variable, padlockable and includes memory stop. Optionally available with tamper-resistant hardware.

Lever Lock Handle:

- ☐ For size 8"/DN200: Painted ductile iron conforming to ASTM A536, Grade 65-45-12, with carbon steel latch plate and zinc-plated carbon steel fasteners.
- ☐ For size 8"/DN200: Infinitely variable, padlockable and includes memory stop. Optionally available with tamper-resistant hardware.
- ☐ For sizes 10 – 12"/DN250 – DN300: Painted ductile iron conforming to ASTM A536, Grade 65-45-12, with carbon steel handle extension and zinc-plated carbon steel fasteners.

Gear Operator (with options below):

- ☐ Handwheel with memory stop.
- ☐ Handwheel with chainwheel.
- ☐ 2" square nut.
- ☐ Thermal barrier.

NOTES

- A padlockable valve refers to those valves which can be padlocked to lockout equipment for preventing inadvertent valve operation. When used in conjunction with an appropriate lockout/tagout system, multiple padlocks may be used. The valve may be padlocked either fully open or fully closed.
- A tamper-resistant option is also available, which is meant to deter theft, vandalism or other malicious activity. The handles and associated components are assembled with tamper-resistant fasteners which are designed for one-time assembly. Attempts to defeat the padlock by partial disassembly of the valve will likely result in evidence of such activity. The valve may be padlocked either fully open or fully closed.
- Handwheel input shaft extensions are not for use with chainwheels.

 © 2022 Victaulic Company. All rights reserved.

3.0 SPECIFICATIONS – MATERIAL (CONTINUED)

Series 761 Vic-300 MasterSeal™ Butterfly Valve

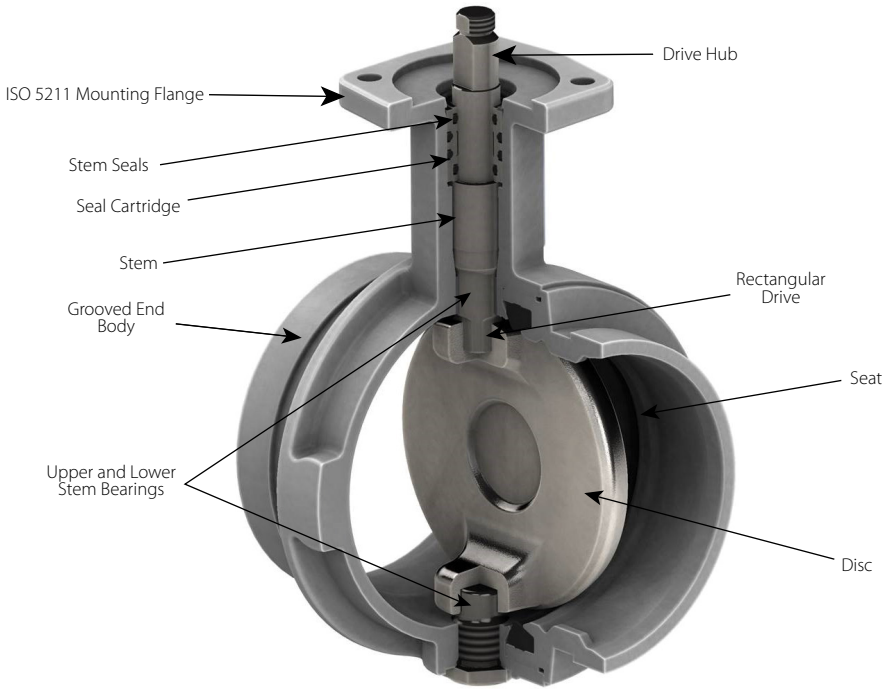

Standard ISO 5211 Mounting Flange

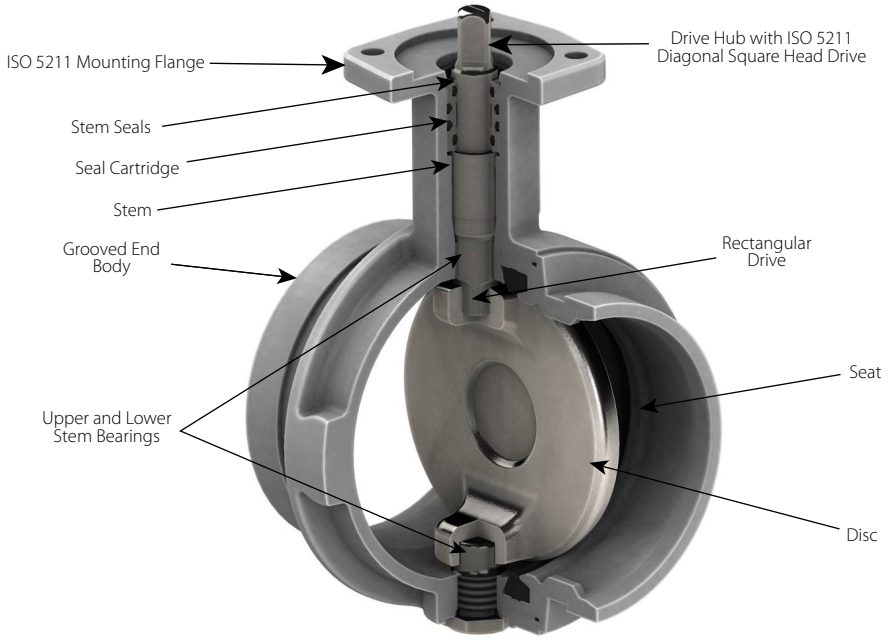

With ISO 5211 Diagonal Square Head Drive

 © 2022 Victaulic Company. All rights reserved.

4.0 DIMENSIONS

Series 761 Vic-300 MasterSeal™ Butterfly Valve – Bare Valve

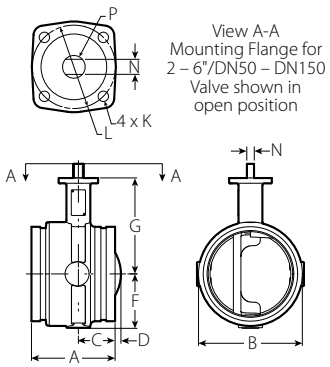

Bare Valve
2 – 6"/DN50 - DN150

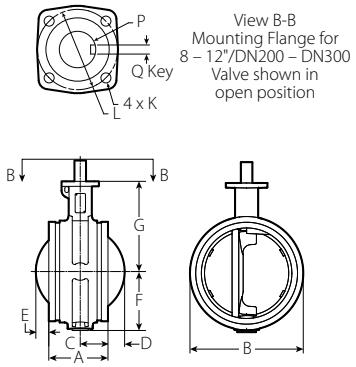

Bare Valve
8 – 12"/DN200 - DN300

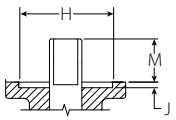

Standard ISO 5211
Mounting Flange Recess
2 – 12"/DN50 – DN300

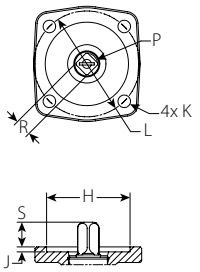

ISO 5211 Mounting Flange
Recess with ISO 5211 Diagonal
Square Head Drive
2 – 12"/DN50 – DN300

Size		Dimensions									Weight	
Nominal inches DN	**Actual Outside Diameter** inches mm	**A End to End** inches mm	**B** inches mm	**C** inches mm	**D** inches mm	**E** inches mm	**F** inches mm	**G** inches mm	**H** inches mm	**Q-Key** inches mm	**Approx. (Each)** lb kg	**ISO 5211 Flange Designation**
2 DN50	2.375 60.3	3.21 81.5	3.25 82.6	1.44 36.6	– –	– –	1.81 46.0	3.81 96.8	2.17 55.2	– –	3.5 1.6	F07
2½	2.875 73.0	3.77 95.8	4.00 101.6	1.77 45.0	– –	– –	2.10 53.3	4.25 108.0	2.17 55.2	– –	5.0 2.3	F07
DN65	3.000 76.1	3.77 95.8	4.00 101.6	1.77 45.0	– –	– –	2.10 53.3	4.25 108.0	2.17 55.2	– –	5.0 2.3	F07
3 DN80	3.500 88.9	3.77 95.8	4.50 114.3	1.77 45.0	– –	– –	2.35 59.7	4.50 114.3	2.17 55.2	– –	6.0 2.7	F07
	4.250[2] 108.0	4.63 117.6	5.50 139.7	2.20 55.8	– –	– –	2.88 73.2	5.25 133.4	2.17 55.2	– –	9.3 4.2	F07
4 DN100	4.500 114.3	4.63 117.6	5.50 139.7	2.18 55.4	– –	– –	2.88 73.2	5.25 133.4	2.17 55.2	– –	9.3 4.2	F07
	5.250[2] 133.0	5.88 149.4	6.30 160.0	2.58 65.5	– –	– –	3.34 84.8	6.25 158.8	2.17 55.2	– –	16.8 7.6	F07
DN125	5.500 139.7	5.88 149.4	6.30 160.0	2.58 65.5	– –	– –	3.34 84.8	6.25 158.8	2.17 55.2	– –	16.8 7.6	F07
5	5.563 141.3	5.88 149.4	6.30 160.0	2.58 65.5	– –	– –	3.34 84.8	6.25 158.8	2.17 55.2	– –	16.8 7.6	F07
	6.250[2] 159.0	5.88 149.4	7.30 185.4	2.58 65.5	0.42 10.6	– –	3.83 97.3	6.75 171.5	2.17 55.2	– –	20.0 9.1	F07
	6.500 165.1	5.88 149.4	7.30 185.4	2.58 65.5	0.42 10.6	– –	3.83 97.3	6.75 171.5	2.17 55.2	– –	20.0 9.1	F07
6 DN150	6.625 168.3	5.88 149.4	7.30 185.4	2.58 65.5	0.42 10.6	– –	3.83 97.3	6.75 171.5	2.17 55.2	– –	20.0 9.1	F07
200A[3]	216.3	5.38 136.7	10.00 254.0	2.38 60.5	1.50 38.1	0.88 22.4	5.00 127.0	8.00 203.2	2.13 54.1	0.188 x 0.88 4.78 x 22.35	34.0 15.4	F07
8 DN200	8.625 219.1	5.33 135.4	10.00 254.0	2.33 59.2	1.47 37.4	0.80 20.3	5.00 127.0	8.00 203.2	2.17 55.2	0.188 x 0.88 4.78 x 22.35	34.3 15.6	F07
250A[3]	267.4	7.88 200.2	12.25 311.2	3.00 76.2	1.88 47.8	0.00 0.0	6.38 162.1	9.75 247.7	2.75 69.9	0.312 x 1.88 7.92 x 47.75	76.1 34.5	F10
10 DN250	10.750 273.0	6.40 162.6	12.25 311.2	3.00 76.2	1.81 45.9	1.41 35.8	6.13 155.7	9.75 247.7	2.76 70.1	0.312 x 1.88 7.92 x 47.75	72.0 32.7	F10
300A[3]	318.5	7.88 200.2	14.25 362.0	3.00 76.2	2.88 73	0.88 22.4	7.38 187.5	10.75 273.1	2.75 69.9	0.312 x 1.88 7.92 x 47.75	93.6 42.5	F10
12 DN300	12.750 323.9	6.50 165.1	14.25 362.0	3.00 76.2	2.80 71.0	2.30 58.4	7.13 181.1	10.75 273.1	2.76 70.1	0.312 x 1.88 7.92 x 47.75	88.0 39.9	F10

[2] Contact Victaulic for availability.

[3] Japanese Industrial Standard (JIS) size.

 © 2022 Victaulic Company. All rights reserved.

4.0 DIMENSIONS (CONTINUED)

Series 761 Vic-300 MasterSeal™ Butterfly Valve – Bare Valve

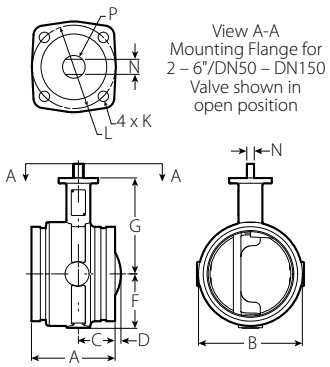

Bare Valve
2 – 6"/DN50 - DN150

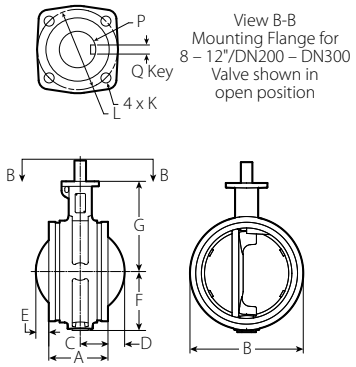

Bare Valve
8 – 12"/DN200 - DN300

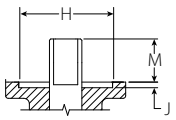

Standard ISO 5211
Mounting Flange Recess
2 – 12"/DN50 – DN300

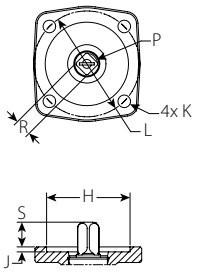

ISO 5211 Mounting Flange
Recess with ISO 5211 Diagonal
Square Head Drive
2 – 12"/DN50 – DN300

Size		Dimensions									Weight	
Nominal inches DN	Actual Outside Diameter inches mm	J inches mm	K inches mm	L inches mm	M inches mm	N inches mm	P inches mm	R[4] inches mm	S inches mm	Q-Key inches mm	Approx. (Each) lb kg	ISO 5211 Flange Designation
2 DN50	2.375 60.3	0.13 3.3	0.34 8.6	2.756 70.0	0.94 23.9	0.32 8.0	0.43 11.0	0.35 9.0	0.48 12.2	– –	3.5 1.6	F07
2½	2.875 73.0	0.13 3.3	0.34 8.6	2.756 70.0	0.94 23.9	0.32 8.0	0.43 11.0	0.35 9.0	0.48 12.2	– –	5.0 2.3	F07
DN65	3.000 76.1	0.13 3.3	0.34 8.6	2.756 70.0	0.94 23.9	0.32 8.0	0.43 11.0	0.35 9.0	0.48 12.2	– –	5.0 2.3	F07
3 DN80	3.500 88.9	0.13 3.3	0.34 8.6	2.756 70.0	0.94 23.9	0.32 8.0	0.43 11.0	0.35 9.0	0.48 12.2	– –	6.0 2.7	F07
	4.250[2] 108.0	0.13 3.3	0.34 8.6	2.756 70.0	0.94 23.9	0.43 11.0	0.59 15.0	0.43 11.0	0.61 15.5	– –	9.3 4.2	F07
4 DN100	4.500 114.3	0.13 3.3	0.34 8.6	2.756 70.0	0.94 23.9	0.43 11.0	0.59 15.0	0.43 11.0	0.61 15.5	– –	9.3 4.2	F07
	5.250[2] 133.0	0.13 3.3	0.34 8.6	2.756 70.0	1.07 27.2	0.50 12.7	0.75 19.1	0.55 14.0	0.89 22.6	– –	16.8 7.6	F07
DN125	5.500 139.7	0.13 3.3	0.34 8.6	2.756 70.0	1.07 27.2	0.50 12.7	0.75 19.1	0.55 14.0	0.89 22.6	– –	16.8 7.6	F07
5	5.563 141.3	0.13 3.3	0.34 8.6	2.756 70.0	1.07 27.2	0.50 12.7	0.75 19.1	0.55 14.0	0.89 22.6	– –	16.8 7.6	F07
	6.250[2] 159.0	0.13 3.3	0.34 8.6	2.756 70.0	1.07 27.2	0.50 12.7	0.75 19.1	0.55 14.0	0.89 22.6	– –	20.0 9.1	F07
	6.500 165.1	0.13 3.3	0.34 8.6	2.756 70.0	1.07 27.2	0.50 12.7	0.75 19.1	0.55 14.0	0.89 22.6	– –	20.0 9.1	F07
6 DN150	6.625 168.3	0.13 3.3	0.34 8.6	2.756 70.0	1.07 27.2	0.50 12.7	0.75 19.1	0.55 14.0	0.89 22.6	– –	20.0 9.1	F07
200A[3]	216.3	0.13 3.3	0.38 9.7	2.75 69.9	1.25 31.8	– –	0.88 22.2	– –	– –	0.188 x 0.88 4.78 x 22.35	34.0 15.4	F07
8 DN200	8.625 219.1	0.13 3.3	0.34 8.6	2.756 70.0	1.16 29.5	– –	0.88 22.2	0.67 17.0	1.15 29.2	0.188 x 0.88 4.78 x 22.35	34.3 15.6	F07
250A[3]	267.4	0.13 3.3	0.50 12.7	4.00 101.6	2.25 57.2	– –	1.25 31.8	– –	– –	0.312 x 1.88 7.92 x 47.75	76.1 34.5	F10
10 DN250	10.750 273.0	0.13 3.3	0.43 11.0	4.016 102.0	2.25 57.2	– –	1.25 31.8	0.87 22.0	1.32 33.5	0.312 x 1.88 7.92 x 47.75	72.0 32.7	F10
300A[3]	318.5	0.13 3.3	0.50 12.7	4.00 101.6	2.25 57.2	– –	1.25 31.8	– –	– –	0.312 x 1.88 7.92 x 47.75	93.6 42.5	F10
12 DN300	12.750 323.9	0.13 3.3	0.43 11.0	4.016 102.0	2.24 56.9	– –	1.25 31.8	0.87 22.0	1.31 33.3	0.312 x 1.88 7.92 x 47.75	88.0 39.9	F10

2 Contact Victaulic for availability.

3 Japanese Industrial Standard (JIS) size.

4 Diagonal square head drive follows a C11 clearance fit.

 © 2022 Victaulic Company. All rights reserved.

4.1 DIMENSIONS

Series 761 Vic-300 MasterSeal™ Butterfly Valve - With Handle

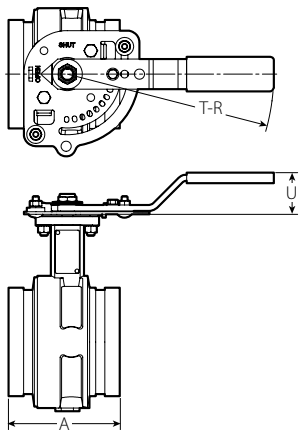

10-Position Handle with Memory Stop
2 – 6"/DN50 - DN150

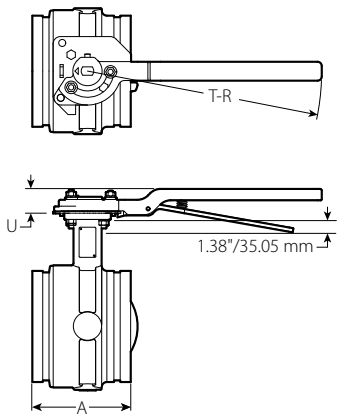

Lever Lock Handle with Memory Stop
8"/DN200

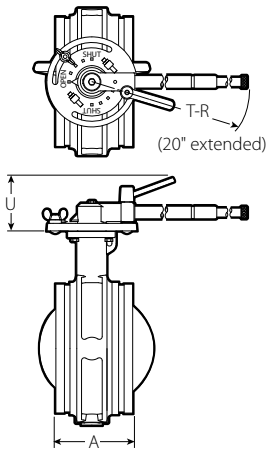

Lever Lock Handle with Memory Stop
10 - 12"/DN250 - DN300

Size		Dimensions			Weight
Nominal inches DN	**Actual Outside Diameter** inches mm	**A End to End** inches mm	**T-R** inches mm	**U** inches mm	**Approximate (Each)** lb kg
2 DN50	2.375 60.3	3.21 81.5	7.00 177.8	1.57 39.9	6.0 2.7
2½	2.875 73.0	3.77 95.8	7.00 177.8	1.57 39.9	7.5 3.4
DN65	3.000 76.1	3.77 95.8	7.00 177.8	1.57 39.9	7.5 3.4
3 DN80	3.500 88.9	3.77 95.8	7.00 177.8	1.57 39.9	8.5 3.9
	4.250[2] 108.0	4.63 117.6	8.50 215.9	1.64 41.7	11.8 5.4
4 DN100	4.500 114.3	4.63 117.6	8.50 215.9	1.64 41.7	11.8 5.4
	5.250[2] 133.0	5.88 149.4	12.00 304.8	1.64 41.7	20.0 9.1
DN125	5.500 139.7	5.88 149.4	12.00 304.8	1.64 41.7	20.0 9.1
5	5.563 141.3	5.88 149.4	12.00 304.8	1.64 41.7	20.0 9.1
	6.250[2] 159.0	5.88 149.4	12.00 304.8	1.64 41.7	23.2 10.5
	6.500 165.1	5.88 149.4	12.00 304.8	1.64 41.7	23.2 10.5
6 DN150	6.625 168.3	5.88 149.4	12.00 304.8	1.63 41.4	23.2 10.5
200A[3]	216.3	5.38 136.7	14.00 355.6	1.50 38.1	37.5 17.0
8 DN200	8.625 219.1	5.33 135.4	14.00 355.6	1.51 38.4	37.5 17.0
250A[3]	267.4	7.88 200	11.63 295.4	4.50 114.3	88.1 40.0
10 DN250	10.750 273.0	6.40 162.6	11.66 296.2	4.50 114.30	84.0 38.1
300A[3]	318.5	7.88 200	11.63 295.4	4.50 114.3	105.6 47.9
12 DN300	12.750 323.9	6.50 165.1	11.66 296.2	4.50 114.3	100.0 45.4

[2] Contact Victaulic for availability.

[3] Japanese Industrial Standard (JIS) size.

 © 2022 Victaulic Company. All rights reserved.

4.2 DIMENSIONS

Series 761 Vic-300 MasterSeal™ Butterfly Valve - With Gear Operator

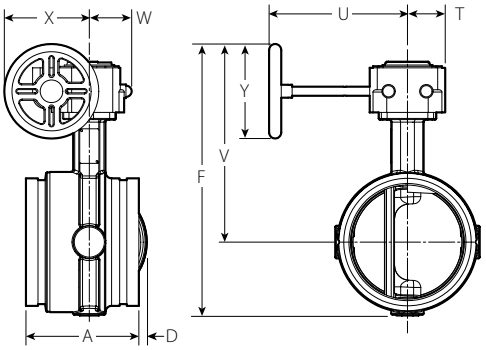

Gear Operator
2 – 6"/DN50 - DN150

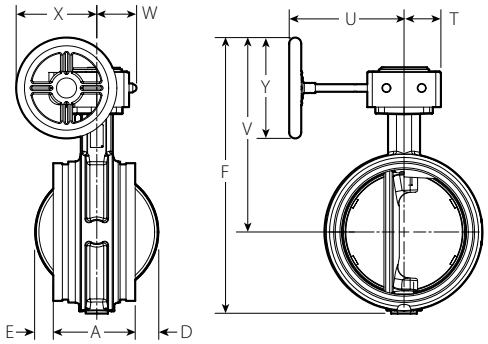

Gear Operator
8 – 12"/DN200 - DN300

Size		Dimensions										Weight
Nominal inches DN	**Actual Outside Diameter** inches mm	**A End to End** inches mm	**D** inches mm	**E** inches mm	**F** inches mm	**T** inches mm	**U** inches mm	**V** inches mm	**W** inches mm	**X** inches mm	**Y** inches mm	**Approximate (Each)** lb kg
2 DN50	2.375 60.3	3.21 81.5	– –	– –	8.65 219.7	1.57 40.0	4.76 121.0	6.84 173.8	1.89 48.0	3.64 92.5	3.9 100.0	6.0 2.7
2½	2.875 73.0	3.77 95.8	– –	– –	9.38 238.3	1.57 40.0	4.76 121.0	7.28 185.0	1.89 48.0	3.64 92.5	3.9 100.0	7.5 3.4
DN65	3.000 76.1	3.77 95.8	– –	– –	9.38 238.3	1.57 40.0	4.76 121.0	7.28 185.0	1.89 48.0	3.64 92.5	3.9 100.0	7.5 3.4
3 DN80	3.500 88.9	3.77 95.8	– –	– –	9.88 251	1.57 40.0	4.76 121.0	7.53 191.3	1.89 48.0	3.64 92.5	3.9 100.0	8.5 3.9
4 DN100	4.500 114.3	4.63 117.6	– –	– –	11.16 283.5	1.57 40.0	4.76 121.0	8.28 210.4	1.89 48.0	3.64 92.5	3.9 100.0	11.8 5.4
DN125	5.500 139.7	5.88 149.4	– –	– –	13.15 334.1	1.97 50.0	7.20 183.0	9.81 249.3	2.20 56.0	4.43 112.5	4.9 125.0	20.8 9.4
5	5.563 141.3	5.88 149.4	– –	– –	13.15 334.1	1.97 50.0	7.20 183.0	9.81 249.3	2.20 56.0	4.43 112.5	4.9 125.0	20.8 9.4
	6.500 165.1	5.88 149.4	0.41 10.5	– –	14.14 359.2	1.97 50.0	7.20 183.0	10.31 262.0	2.20 56.0	4.43 112.5	4.9 125.0	24.0 10.9
6 DN150	6.625 168.3	5.88 149.4	0.41 10.5	– –	14.14 359.2	1.97 50.0	7.20 183.0	10.31 261.9	2.28 57.9	4.43 112.5	4.9 125.0	24.0 10.9
200A[3]	216.3	5.38 136.5	1.50 38.1	0.88 22.4	16.75 425.5	2.00 50.8	7.25 184.2	11.63 295.0	2.25 57.2	4.38 111.3	5.00 127.0	36.6 16.6
8 DN200	8.625 219.1	5.33 135.4	1.47 37.4	0.8 20.4	16.63 422.5	1.97 50.0	7.20 183.0	11.56 293.7	2.20 56.0	4.43 112.5	4.9 125.0	38.3 17.4
250A[3]	267.4	7.88 200.2	1.88 47.8	0.00 0.0	21.63 549.4	2.88 73.2	9.00 228.6	15.25 387.4	3.13 79.5	6.38 162	7.88 200.2	73.6 33.4
10 DN250	10.750 273.0	6.40 162.6	1.81 45.9	1.41 35.7	21.55 547.4	2.87 73.0	8.98 228.0	15.18 385.7	3.11 79.0	6.30 160.0	7.9 200.0	81.5 39.0
300A[3]	318.5	7.88 200.2	2.88 73.2	0.88 22.4	23.63 600.2	2.88 73.2	9.00 228.6	16.25 413.0	3.13 79.5	6.38 162	7.88 200.2	90.4 41.0
12 DN300	12.750 323.9	6.50 165.1	2.79 70.9	2.29 58.3	23.54 598	2.87 73.0	8.98 228.0	16.18 411.1	3.11 79.0	6.30 160.0	7.9 200.0	97.5 44.2

[3] Japanese Industrial Standard (JIS) size.

 © 2022 Victaulic Company. All rights reserved.

4.3 DIMENSIONS

Accessories

Chainwheels

Chainwheels are mounted to the gear operator handwheels. Sprocket rim and guide arms are made of cast aluminum. Chain is galvanized steel weldless lock link chain.

HOW TO ORDER:

Specify type valve and operator by valve numbering system shown on page 14.

Always specify length of chain required.

For insulation and locking device, contact Victaulic for details. Handwheel input shaft extensions are not for use with chainwheels.

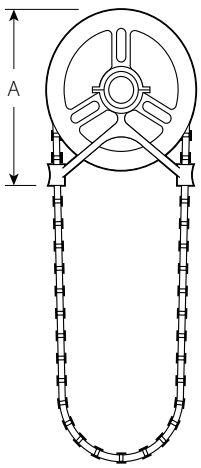

Chainwheel and Guide
with Safety Cable Kit

Size				Dimensions	Weight
Nominal inches DN	**Sprocket** inches	**Chain Trade Size**	**Chainwheel (Diameter)** inches mm	**A** inches mm	**Approximate (Each)** lb kg
2 – 4 DN50 – DN100	0	2	4.00 102	4.63 118	2.0 0.9
6 – 8 DN150 – DN200	1	1/0	5.75 146	6.38 162	4.0 1.8
10 – 12 DN250 – DN300	1 ½	1/0	9.00 229	10.50 267	10.0 4.5

 © 2022 Victaulic Company. All rights reserved.

5.0 PERFORMANCE

Series 761 Vic-300 MasterSeal™ Butterfly Valve

C_v/K_v values for flow of water at +60°F/+16°C with various disc positions are shown in the table below.

Formulas for C_v/K_v values:

$$\Delta P = \frac{Q^2}{C_v^2}$$

$$Q = C_v \times \sqrt{\Delta P}$$

Where:
Q = Flow (GPM)
ΔP = Pressure Drop (psi)
C_v = Flow Coefficient

$$\Delta P = \frac{Q^2}{K_v^2}$$

$$Q = K_v \times \sqrt{\Delta P}$$

Where:
Q = Flow (m^3/hr)
ΔP = Pressure Drop (Bar)
K_v = Flow Coefficient

Size		Cv	Kv
Nominal inches DN	**Actual Outside Diameter** inches mm	**(Full Open)**	**(Full Open)**
2 DN50	2.375 60.3	115	99
2½	2.875 73.0	260	224
DN65	3.000 76.1	260	224
3 DN80	3.500 88.9	440	379
	4.250 108.0	820	707
4 DN100	4.500 114.3	820	707
	5.250 133.0	1200	1034
DN125	5.500 139.7	1200	1034
5	5.563 141.3	1200	1034
	6.250 159.0	1800	1552
	6.500 165.1	1800	1552
6 DN150	6.625 168.3	1800	1552
200A[3]	216.3	3400	2931
8 DN200	8.625 219.1	3400	2931
250A[3]	267.4	5800	5000
10 DN250	10.750 273.0	5800	5000
300A[3]	318.5	9000	7758
12 DN300	12.750 323.9	9000	7758

[3] Japanese Industrial Standard (JIS) size.

 © 2022 Victaulic Company. All rights reserved.

5.0 PERFORMANCE (CONTINUED)

Series 761 Vic-300 MasterSeal™ Butterfly Valve

Flow Characteristics

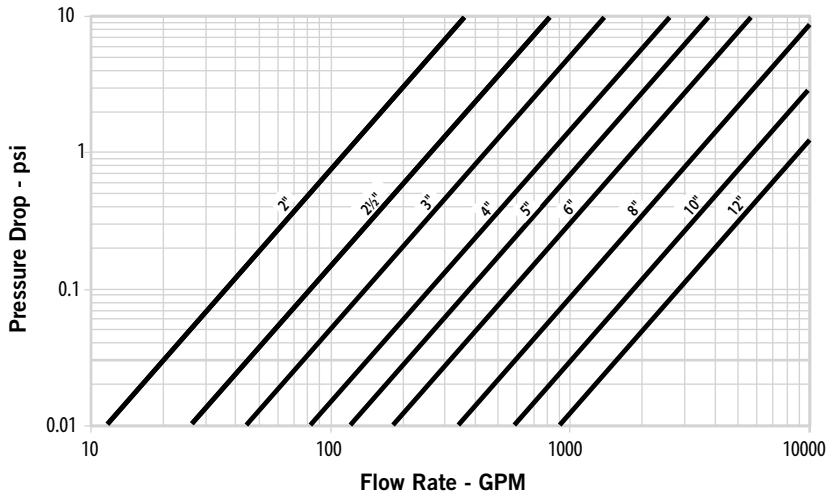

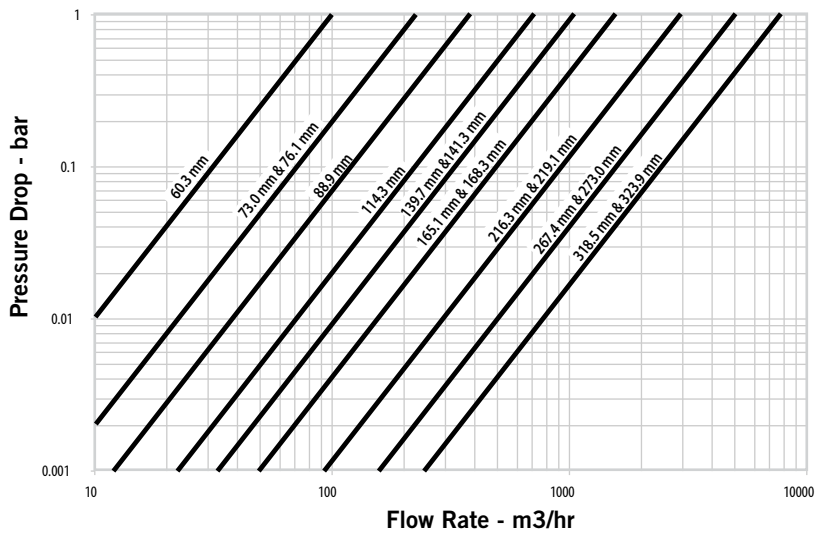

 © 2022 Victaulic Company. All rights reserved.

5.0 PERFORMANCE (CONTINUED)

Series 761 Vic-300 MasterSeal™ Butterfly Valve

Size		Flow Coefficients – Cv/Kv											
		Disc Position (Degrees Open)											
		90		70		60		50		40		30	
Nominal inches DN	Actual Outside Diameter inches mm	Cv	Kv	Cv	Kv	Cv	Kv	Cv	Kv	Cv	Kv	Cv	Kv
2 DN50	2.375 60.3	115	99	60	52	36	31	23	20	14	12	7	6
2½	2.875 73.0	260	224	140	121	80	69	50	43	30	26	16	14
DN65	3.000 76.1	260	224	140	121	80	69	50	43	30	26	16	14
3 DN80	3.500 88.9	440	379	230	198	140	121	90	78	50	43	26	22
	4.250 108.0	820	707	430	371	250	216	160	138	100	86	50	43
4 DN100	4.500 114.3	820	707	430	371	250	216	160	138	100	86	50	43
	5.250 133.0	1200	1034	620	534	370	319	240	207	140	121	70	60
DN125	5.500 139.7	1200	1034	620	534	370	319	240	207	140	121	70	60
5	5.563 141.3	1200	1034	620	534	370	319	240	207	140	121	70	60
	6.250 159.0	1800	1552	940	810	560	483	360	310	220	190	110	95
	6.500 165.1	1800	1552	940	810	560	483	360	310	220	190	110	95
6 DN150	6.625 168.3	1800	1552	940	810	560	483	360	310	220	190	110	95
200A[3]	216.3	3400	2931	1770	1526	1050	905	670	578	410	353	200	172
8 DN200	8.625 219.1	3400	2931	1770	1526	1050	905	670	578	410	353	200	172
250A[3]	267.4	5800	5000	3020	2603	1800	1552	1150	991	700	603	350	302
10 DN250	10.750 273.0	5800	5000	3020	2603	1800	1552	1150	991	700	603	350	302
300A[3]	318.5	9000	7758	4680	4034	2790	2405	1780	1534	1080	931	540	465
12 DN300	12.750 323.9	9000	7758	4680	4034	2790	2405	1780	1534	1080	931	540	465

[3] Japanese Industrial Standard (JIS) size.

 © 2022 Victaulic Company. All rights reserved.

5.1 PERFORMANCE

Series 761 Vic-300 MasterSeal™ Butterfly Valve

Torque Requirements

Size		Torque – Inch Pounds/Newton Meters					
Nominal inches mm	Actual Outside Diameter inches mm	Differential Pressure – psi/bar					
		50/3	100/7	150/10	200/14	232/16	300/21
2 DN50	2.375 60.3	53 6	65 7	78 9	90 10	100 11	115 13
2½	2.875 73.0	100 11	120 14	140 16	160 18	170 19	200 23
DN65	3.000 76.1	100 11	120 14	140 16	160 18	170 19	200 23
3 DN80	3.500 88.9	150 17	170 19	190 22	210 24	230 26	260 29
	4.250 108.0	220 25	250 28	280 32	310 35	330 37	370 42
4 DN100	4.500 114.3	220 25	250 28	280 32	310 35	330 37	370 42
	5.250 133.0	340 38	390 44	450 51	500 57	530 60	600 68
DN125	5.500 139.7	340 38	390 44	450 51	500 57	530 60	600 68
5	5.563 141.3	340 38	390 44	450 51	500 57	530 60	600 68
	6.250 159.0	410 46	470 53	540 61	600 68	640 72	730 83
	6.500 165.1	410 46	470 53	540 61	600 68	640 72	730 83
6 DN150	6.625 168.3	410 46	470 53	540 61	600 68	640 72	730 83
200A[3]	216.3	540 61	680 77	820 93	950 107	1040 118	1230 139
8 DN200	8.625 219.1	540 61	680 77	820 93	950 107	1040 118	1230 139
250A[3]	267.4	1610 182	1920 217	2230 252	2530 286	2730 308	3150 356
10 DN250	10.750 273.0	1610 182	1920 217	2230 252	2530 286	2730 308	3150 356
300A[3]	318.5	2720 307	2880 325	3040 344	3190 360	3290 372	3510 397
12 DN300	12.750 323.9	2720 307	2880 325	3040 344	3190 360	3290 372	3510 397

[3] Japanese Industrial Standard (JIS) size.

Source:

These torque values were derived from test data with valves in water at ambient temperatures with EPDM seals. For other material and service conditions, apply a suitable service factor.

Torque Factors:

All torque values are for normal conditions (i.e., the valve is operated at least once a quarter, disc corrosion is expected to be minor, the media is clean and nonabrasive, and the chemical effects upon the elastomer are minor).

Typical Fluid Torque Factors Commonly Used in the Industry:

Water: 1.0; Lubricated service: 0.8; Dry gases: Lubricated nitrile "T" seat seals may be specified for dry gases wherever chemically appropriate. See material torque factor below.

Material Torque Factors:

EPDM = 1.0; Fluoroelastomer = 1.2; Nitrile = 0.8

Cycling Factor:

Valve torque will typically increase and actuator output decrease as the valve is cycled. A factor of 1.5 should be applied for when total valve cycles are expected to exceed 5,000.

 © 2022 Victaulic Company. All rights reserved.

5.1 PERFORMANCE (CONTINUED)

Actuation Factor:

A factor should be added to account for potential drift in the output of the actuator due to actuator performance, misalignment or external inputs (i.e., air or power supply). For this, a factor of up to 1.25 may be used.

Combining Torque Factors:

When multiple torque factors apply, they are combined by multiplying them. Example: For an EPDM seal and a 5,000-cycle factor, the combined factor would be 1.0 X (1.5) = 1.5.

NOTES

- Under certain high flow conditions, the hydrodynamic torque can exceed the seating torque. Large butterfly valves are not recommended for use in a free discharge condition, such as filling an empty line with fluid at the full-rated pressure.
- Contact Victaulic for other services.

5.2 PERFORMANCE

Series 761 Vic-300 MasterSeal™ Butterfly Valve

Typical Specifications

Butterfly valves 2 – 12"/DN50 – DN300 shall be rated to 300 psi/2100 kPa/21 bar and be suitable for bi-directional and dead-end service from full vacuum to full-rated pressure. Body material shall be ductile iron with blowout proof stainless steel stems and electroless nickel coated ductile iron disc. Seat material shall be EPDM and have a full 360° continuous contact with the seating surface. Stem seals shall be of the same material grade as the seats. Disc shall be offset from the centerline of the stems and shall be connected to the stem without the use of fasteners or pins. Valve ends shall be grooved. Valve shall have standard ISO flange mounting for ease of actuation. Operators shall be as specified by choice in valve table. The standard handle valve 2 – 12"/DN50 – DN300 shall include latch lock, infinitely variable and memory stop features. Manufacturer – Victaulic – Vic-300 *MasterSeal* Valve or approved equal. Valve with EPDM seat is UL classfied to ANSI/NSF 61.

Numbering System

V - 040 - 761 S E - 0

Type	Actual OD in/mm	Size Code	Series	Disc/Stem	Seat	Operator
V	2.375/60.3	020	761	S - Ductile Iron/416SS	E - EPDM	0 - Bare
	2.875/73.0	024		B - Aluminum Bronze/416SS	T - Lubricated Nitrile	2 - 10-Position handle with memory stop
	3.000/76.1	761		V - Thermal Barrier	O - Fluoroelastomer	3 - Gear operator
	3.500/88.9	030		X - CF8M/416SS		4 - Lever lock with tamper resistant device (8"/200 mm)
	4.250/108.0	108		9 - Special [5]		5 - Gear operator with memory stop
	4.500/114.3	040				6 - Gear operator with chain wheel
	5.250/133.0	133				7 - Gear operator with memory stop and chain wheel
	5.500/139.7	139				8 - Gear operator with AWWA 2" square oper. nut
	5.563/141.3	050				9 - Special [5]
	6.250/159.0	159				S - Bare valve with ISO 5211 diagonal square head drive
	6.500/165.1	165				
	6.625/168.3	060				
	8.500/216.3	216				
	8.625/219.1	080				
	10.500/267.4	267				
	10.750/273.0	100				
	12.500/318.5	318				
	12.750/323.9	120				

[5] Details required with order.

 © 2022 Victaulic Company. All rights reserved.

5.3 PERFORMANCE

Series 761 Vic-300 MasterSeal™ Butterfly Valve

Important Installation Considerations

When installing a Victaulic butterfly valve into a piping system, follow the instructions supplied with the coupling. Refer to the notes below for applications/limitations.

When using butterfly valves for throttling service, Victaulic recommends the disc be positioned no less than 30 degrees open. For best results, the disc should be between 30 and 70 degrees open. High pipeline velocities and/or throttling with the disc less than 30 degrees open may result in noise, vibration, cavitation, severe line erosion, and/or loss of control. For details regarding throttling services, contact Victaulic.

Victaulic recommends that flow velocities for water service are limited to 20 ft. per sec./6 m per sec. When higher flow velocities are necessary, contact Victaulic. When dealing with flow media other than water, contact Victaulic.

Victaulic recommends good piping practices and installing the valve five pipe diameters downstream of sources of irregular flow, such as pumps, elbows and control valves. If not practical due to space constraints, the system should be designed to locate and orient the valve to minimize the impact of dynamic torque and valve life.

Victaulic butterfly valves are designed with grooved ends for use with grooved pipe couplings. If flange connections are required, refer to the following notes regarding Vic-Flange® Adapter restrictions.

- Style 741 Vic-Flange Adapters can be used on all sizes of Series 761 Vic®-300 MasterSeal™ Butterfly Valves.
- Style 743 Vic-Flange Adapters cannot be used with Series 761 Vic®-300 MasterSeal™ Butterfly Valves. A No. 46 ANSI 300 groove by flange adapter is required.

DO NOT INSTALL BUTTERFLY VALVES INTO THE SYSTEM WITH THE DISC IN THE FULLY OPEN POSITION.

 © 2022 Victaulic Company. All rights reserved.

6.0 NOTIFICATIONS

WARNING

- **Read and understand all instructions before attempting to install, remove, adjust, or maintain any Victaulic piping products.**
- **Depressurize and drain the piping system before attempting to install, remove, adjust, or maintain any Victaulic piping products.**
- **Wear safety glasses, hardhat, and foot protection.**

Failure to follow these instructions could result in death or serious personal injury and property damage.

7.0 REFERENCE MATERIALS

17.40: Victaulic Vic-300 MasterSeal Stainless Steel Butterfly Valve – Series 461

22.14: Victaulic Copper Connection Butterfly Valve – Series 608N

I-100: Victaulic Field Installation Handbook

I-ENDCAP: Victaulic End Cap Installation Safety Instructions

I-VIC300MS: Installation and Maintenance Instructions – Series 761 Vic-300 MasterSeal™ Carbon Steel Butterfly Valve

User Responsibility for Product Selection and Suitability
Each user bears final responsibility for making a determination as to the suitability of Victaulic products for a particular end-use application, in accordance with industry standards and project specifications, and the applicable building codes and related regulations as well as Victaulic performance, maintenance, safety, and warning instructions. Nothing in this or any other document, nor any verbal recommendation, advice, or opinion from any Victaulic employee, shall be deemed to alter, vary, supersede, or waive any provision of Victaulic Company's standard conditions of sale, installation guide, or this disclaimer.

Intellectual Property Rights
No statement contained herein concerning a possible or suggested use of any material, product, service, or design is intended, or should be constructed, to grant any license under any patent or other intellectual property right of Victaulic or any of its subsidiaries or affiliates covering such use or design, or as a recommendation for the use of such material, product, service, or design in the infringement of any patent or other intellectual property right. The terms "Patented" or "Patent Pending" refer to design or utility patents or patent applications for articles and/or methods of use in the United States and/or other countries.

Note
This product shall be manufactured by Victaulic or to Victaulic specifications. All products to be installed in accordance with current Victaulic installation/assembly instructions. Victaulic reserves the right to change product specifications, designs and standard equipment without notice and without incurring obligations.

Installation
Reference should always be made to the Victaulic installation handbook or installation instructions of the product you are installing. Handbooks are included with each shipment of Victaulic products, providing complete installation and assembly data, and are available in PDF format on our website at www.victaulic.com.

Warranty
Refer to the Warranty section of the current Price List or contact Victaulic for details.

Trademarks
Victaulic and all other Victaulic marks are the trademarks or registered trademarks of Victaulic Company, and/or its affiliated entities, in the U.S. and/or other countries.

08.20 2702 Rev S Updated 07/2022 © 2022 Victaulic Company. All rights reserved.