Service Sink/ Mop Sink Accessories

TAG:

B-0654

Stainless Steel Hose Bracket

Architect/Engineering Specifications:

Single stainless steel hose bracket with spring-loaded rubber grip. 30" rubber hose with plain end outlet and 3/4" garden hose female inlet

Job Name_____
Model Specified_____Quantity_____
Variations Specified_____
Date_____

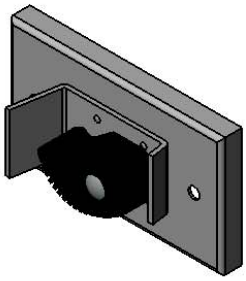

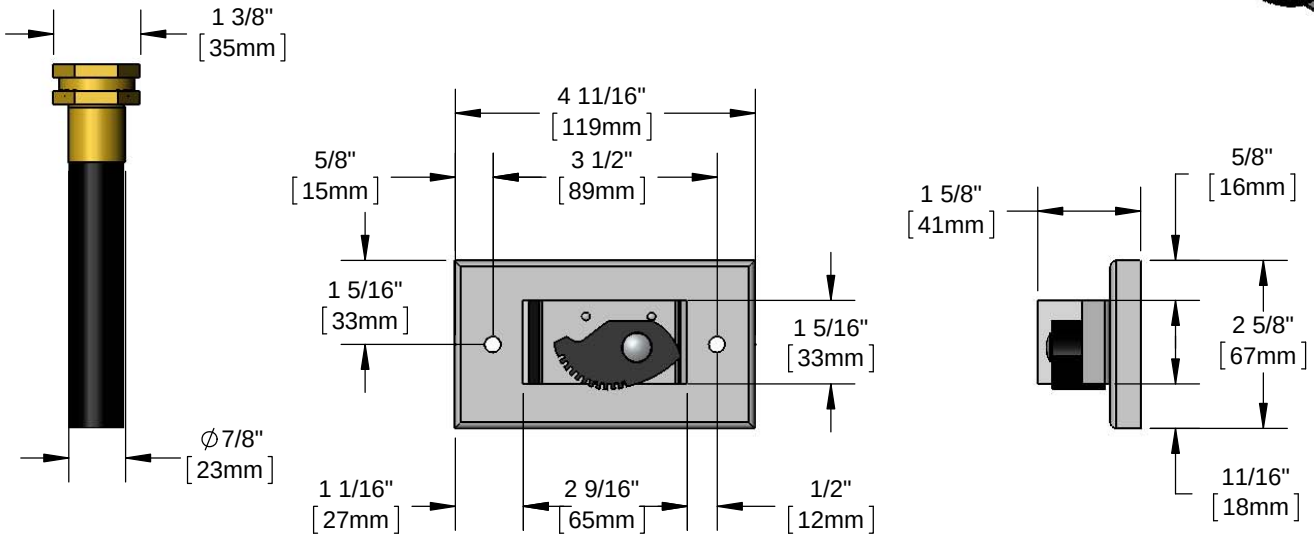

Features & Benefits:

- Stainless steel hose bracket
- One (1) spring-loaded Rubber grip
- 4 11/16" long by 2 5/8" wide
- 30" rubber hose w plain end outlet & 3/4" garden hose female inlet
- (2) Mounting screws included
- Material: Stainless steel body, rubber grip & hose

Product Compliance:

- N/A

Warranty: One Year (Limited)

Performance Data:

- N/A

T&S BRASS AND BRONZE WORKS, INC.
• 2 Saddleback Cove • Travelers Rest, SC 29690
Ph 800-476-4103 • Fax 864-834-3518
• Simi Valley, CA • Ph 800-423-0150 • www.tsbrass.com

Date: 05/14/15