SUBMITTAL INFORMATION

Meter Gasket - *(GT-xxx style)*

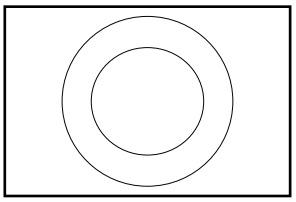

DOUBLE PURPOSE UNION SWIVEL CONNECTION GASKET

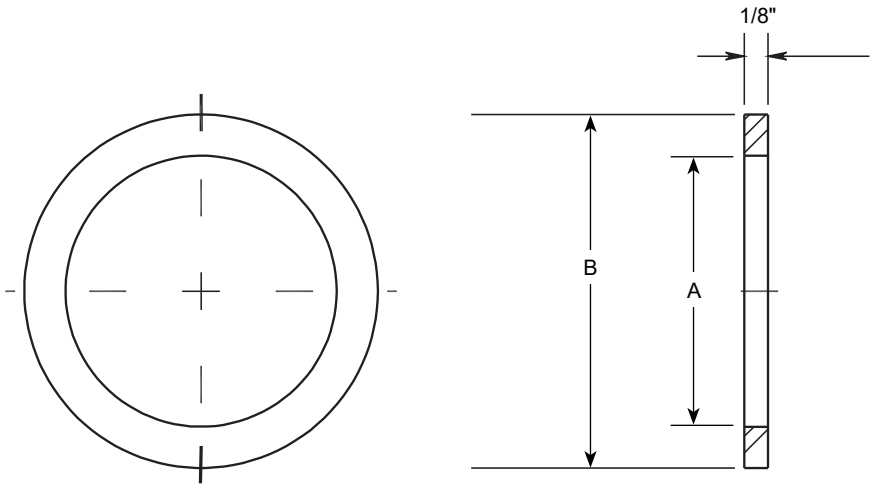

Meter Size	Diameter A	Diameter B	Thickness (T)	Part Number	✓ Submitted Item(s)
3/4"	1-3/16"	1-1/2"	1/8"	GT-205	
1"	1-7/16"	1-7/8"	1/8"	GT-206	

FEATURES

- Composed of aramid fibers with an SBR binder
- Conforms to ASTM F104

The Ford Meter Box Company considers the information in this submittal form to be correct at the time of publication. Item and option availability, including specifications, are subject to change without notice. Please verify that your product information is current.

The Ford Meter Box Company, Inc.
P.O. Box 443, Wabash, Indiana U.S.A. 46992-0443
Phone: 260-563-3171 / Fax: 800-826-3487
Overseas Fax: 260-563-0167
www.fordmeterbox.com

11/15/18

Submitted By: