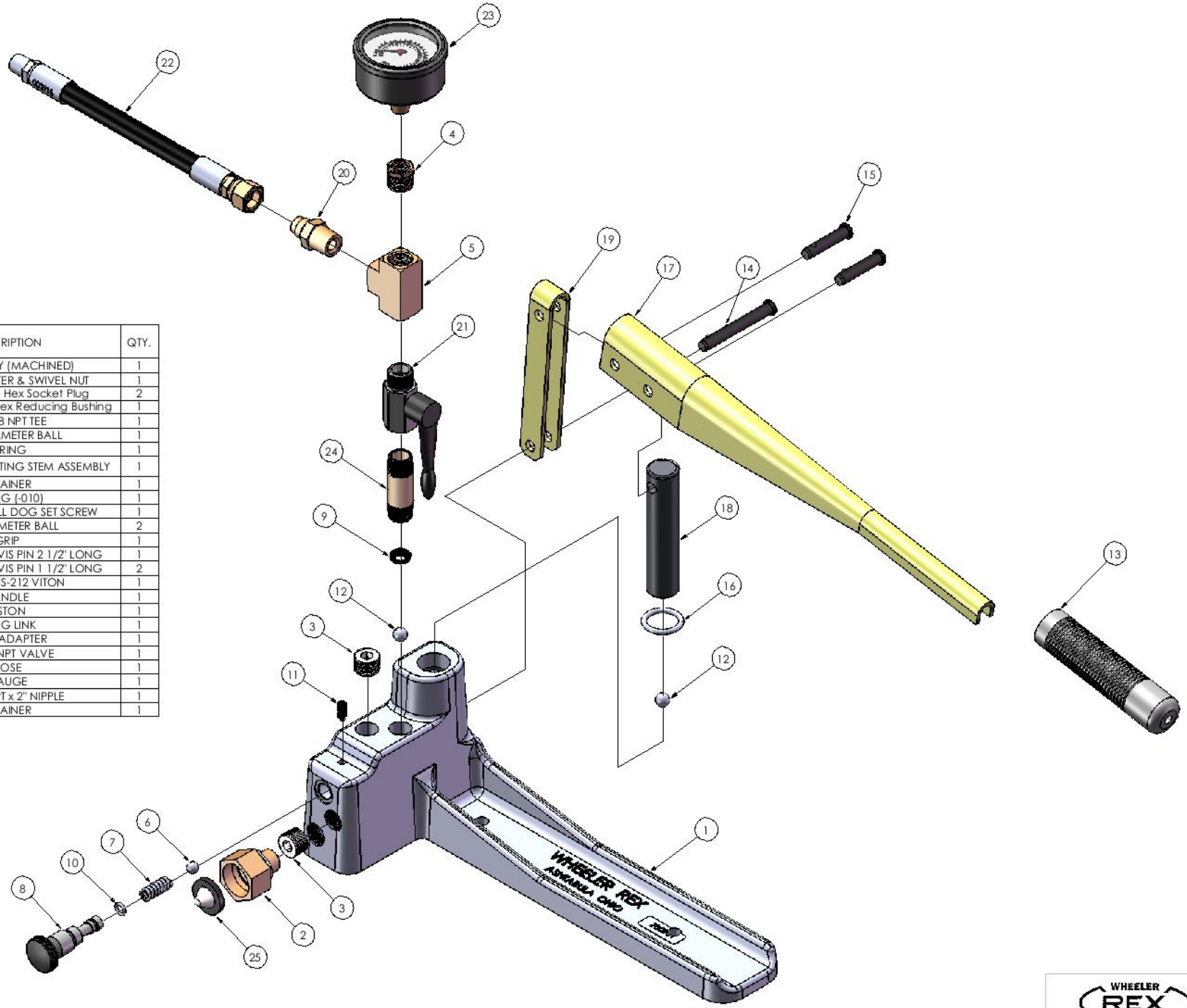

ITEM NO.	PART NUMBER	DESCRIPTION	QTY.
1	700902	PUMP BODY (MACHINED)	1
2	276767	SWIVEL ADAPTER & SWIVEL NUT	1
3	275749	3/8" Threaded Hex Socket Plug	2
4	275924	1/4" to 3/8" Brass Hex Reducing Bushing	1
5	275923	3/8-18 NPT TEE	1
6	203201	5/16" DIAMETER BALL	1
7	221413	SPRING	1
8	700904	STANDARD ADJUSTING STEM ASSEMBLY	1
9	220096	RETAINER	1
10	276806	O-RING (-010)	1
11	276118	1/4-20 x 1/2" FULL DOG SET SCREW	1
12	275435	3/8" DIAMETER BALL	2
13	154	GRIP	1
14	276774	COTTERLESS CLEVIS PIN 2 1/2" LONG	1
15	276075	COTTERLESS CLEVIS PIN 1 1/2" LONG	2
16	275815	O-RING NS-212 VITON	1
17	220638	HANDLE	1
18	220643	PISTON	1
19	700898	LONG LINK	1
20	5614	HOSE ADAPTER	1
21	275921	3/8-18 NPT VALVE	1
22	3915	HOSE	1
23	36359	GAUGE	1
24	275919	3/8-18 NPT x 2" NIPPLE	1
25	275917	STRAINER	1

WHEELER REX

3744 Jefferson Rd., Ashtabula, OH 44005

DESCRIPTION:
HAND OPERATED HYDROSTATIC TEST PUMP

PART NO. 29200

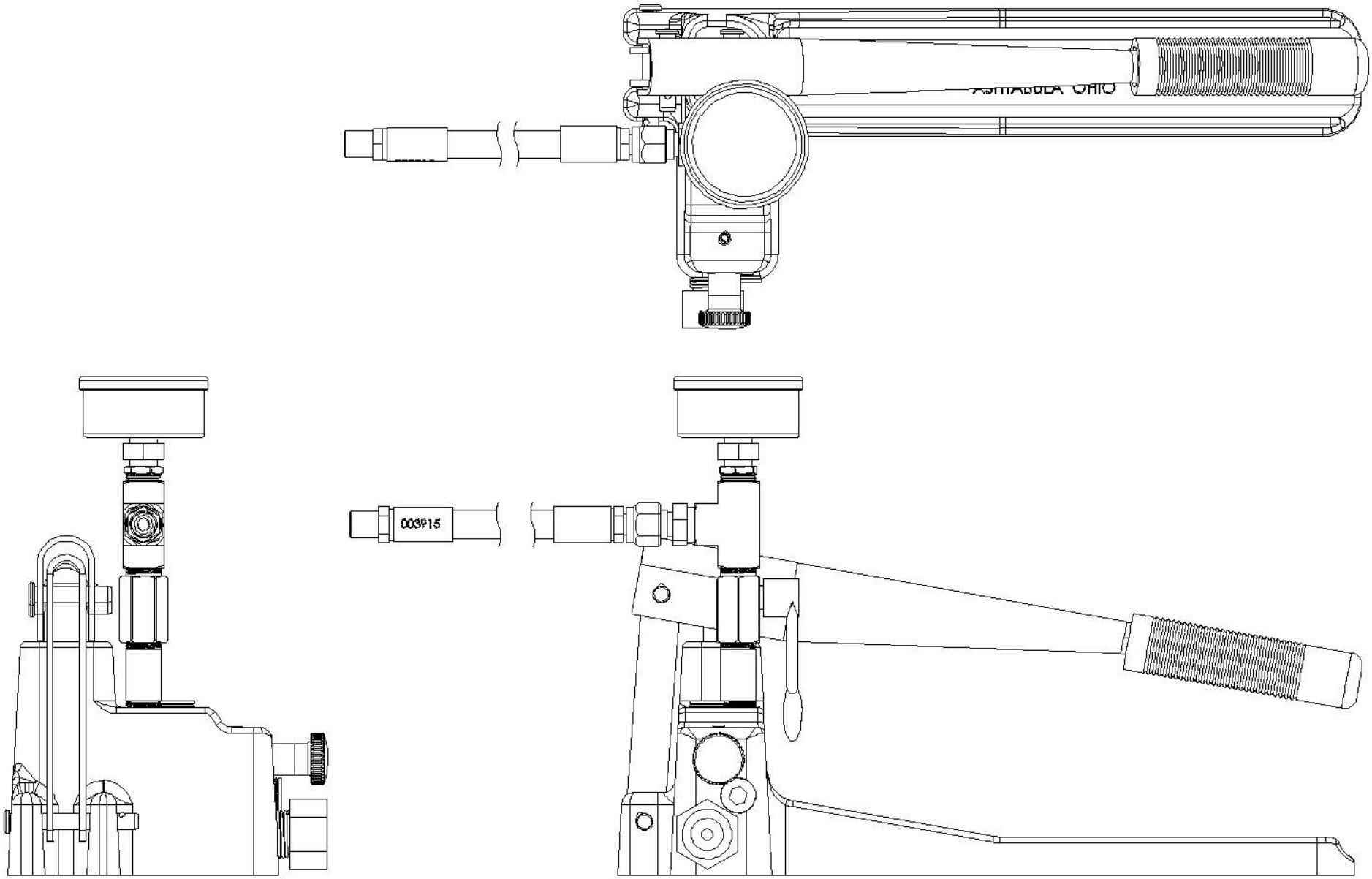

WHEELER REX

3744 Jefferson Rd., Ashtabula, OH 44005

DESCRIPTION:
HAND OPERATED HYDROSTATIC TEST PUMP

PART NO. 29200