KALLISTA®

For Loft™ Volume Control Valve Trim
3-Way Transfer Valve Trim

Service Parts

P23013
P23083

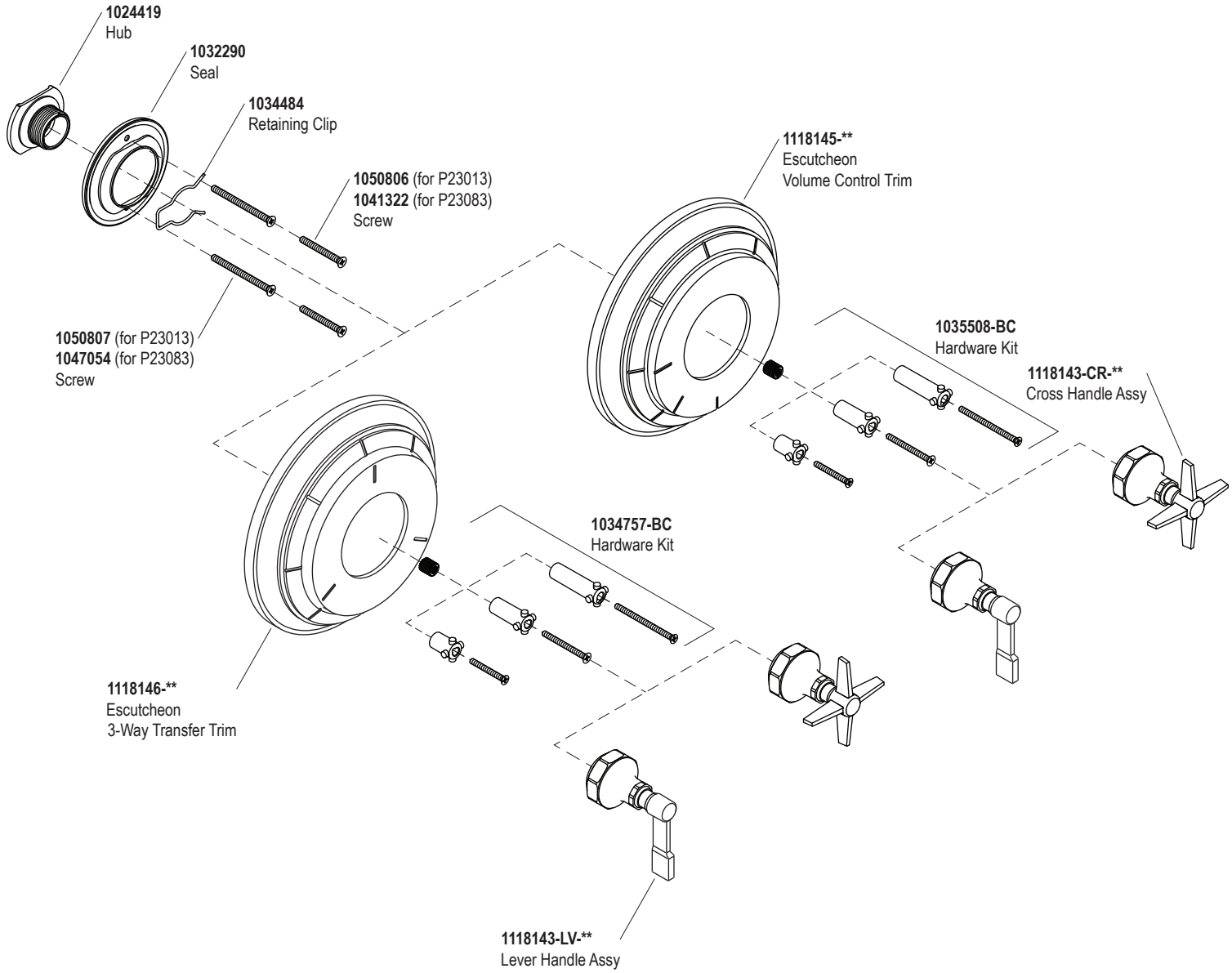

We reserve the right to make revisions without notice in the design of products or in packaging unless this right has specifically been waived at the time the order is accepted.

Questions? Problems? For additional assistance, please contact Kallista's Customer Service Department at 1-888-4KALLISTA (1-888-452-5547) or FAX 1-888-272-3094.