MOEN

Buy it for looks. Buy it for life.®

Specifications

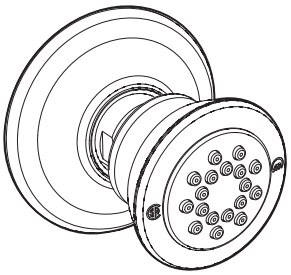

Small Single Function Body Spray

Models: A501 series

DESCRIPTION
- Metallic spray face and shell
- Brass swivel ball assembly
- 1/2" IPS connection
- Available in various finishes identified by suffix

OPERATION
- Single spray function

FLOW
- Designed to deliver 1.75 gpm max (6.6 L/min) at 80 psi

STANDARDS
- Third party certified to ASME A112.18.1/CSA B125.1 and all applicable requirements referenced therein

WARRANTY
- Warranted for one year against material or manufacturing defects

A501 Series

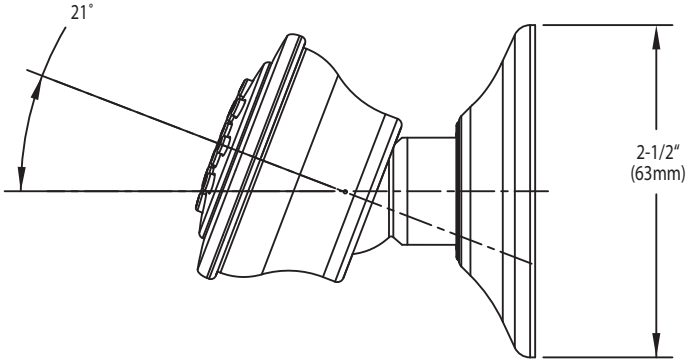

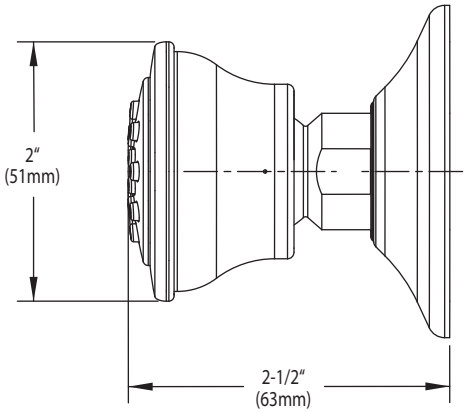

CRITICAL DIMENSIONS

(DO NOT SCALE)