BEDPAN WASHER

Z877P2-LKS-HK-SH2

TAG _____

Engineering Specification: Zurn AquaSpec® Z877P2-LKS-HK-SH2 Polished chrome plated cast brass bedpan washer with a quarter turn ceramic disc cartridge, a loose key stop with a removable brass tee handle and a vandal resistant color-coded metal four arm handle. Unit is furnished with a vacuum breaker, a hand-held 4' [122cm] vinyl spray hose with an angled insulated 6" [152mm] handle and hook. (Note: Atmoshperic vacuum breaker not intended for continuous pressure applications.)

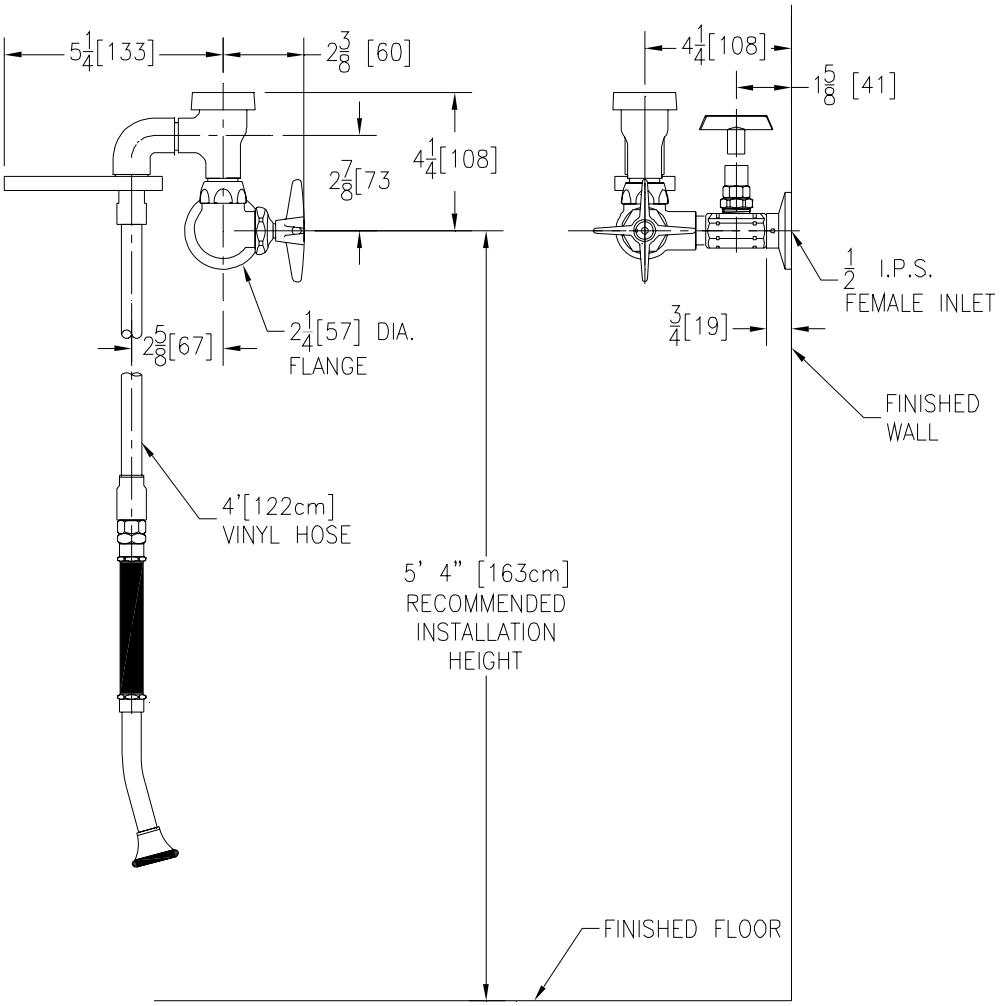

Note: *All dimensions are for reference only. Do not use for pre-plumbing*

OPTIONAL ACCESSORIES

Suffix	Description
___-HCT	Hot/Cold Text Indexes
___-LH	Left Side Handle
___-SH	Spray Hose
___-SH1	Spray Hose with Insulated Handle
___-WHK1	Wall Hook

ZURN INDUSTRIES, LLC ♦ COMMERCIAL BRASS OPERATION ♦ 2640 SOUTH WORK STREET ♦ FALCONER NY 14733
Phone: 1-800-997-3876 ♦ Fax: 1-919-775-3541 ♦ www.zurn.com
In Canada: ZURN INDUSTRIES LIMITED ♦ 3544 Nashua Drive ♦ Mississauga, Ontario L4V1L2 ♦ Phone: 905/405-8272 Fax: 905/405-1292

AquaSpec® is a registered trademark of Zurn Industries, LLC
©2011 Zurn Industries, LLC

Rev. F Date: 10/21/11 C.N. No.128305
Dwg. No. 62020 Product No. Z877P2-LKS-HK-SH2