Code No. 0816496
Rev. 3 (08/10)

INSTALLATION INSTRUCTIONS FOR SLOAN SF SERIES ELECTRONIC SENSOR ACTIVATED LAVATORY FAUCETS

SF-2100 Series
Adapter Powered with Battery Backup, Sensor Activated, Pedestal Style Lavatory Faucets

SF-2150 Series
Battery Powered, Sensor Activated, Pedestal Style Lavatory Faucets



SF-2300 Series
Adapter Powered with Battery Backup Sensor Activated, 4" Centerset Lavatory Faucets

SF-2350 Series
Battery Powered, Sensor Activated 4" Centerset Lavatory Faucets



SF-2200 Series
Adapter Powered with Battery Backup Sensor Activated, Gooseneck Style Lavatory Faucets

SF-2250 Series
Battery Powered, Sensor Activated Gooseneck Style Lavatory Faucets



SF-2400 Series
Adapter Powered with Battery Backup, Sensor Activated, Pedestal Style Lavatory Faucets

SF-2450 Series
Battery Powered, Sensor Activated, Pedestal Style Lavatory Faucets



LIMITED WARRANTY

Sloan Valve Company warrants its SF Series Electronic Hand Washing Faucets to be made of first class materials, free from defects of material or workmanship under normal use and to perform the service for which they are intended in a thoroughly reliable and efficient manner when properly installed and serviced, for a period of one year from date of purchase. During this period, Sloan Valve Company will, at its option, repair or replace any part or parts which prove to be thus defective if returned to Sloan Valve Company, at customer's cost, and this shall be the sole remedy available under this warranty. No claims will be allowed for labor, transportation or other incidental costs. This warranty extends only to persons or organizations who purchase Sloan Valve Company's products directly from Sloan Valve Company for purpose of resale. This warranty does not cover the life of the batteries.

THERE ARE NO WARRANTIES WHICH EXTEND BEYOND THE DESCRIPTION ON THE FACE HEREOF. IN NO EVENT IS SLOAN VALVE COMPANY RESPONSIBLE FOR ANY CONSEQUENTIAL DAMAGES OF ANY MEASURE WHATSOEVER.

PRIOR TO INSTALLATION

Prior to installing the Sloan SF Series Electronic Lavatory Faucet, install the items listed below. Also, refer to the appropriate rough-in diagram.

- Plug-In Adapter
  Models SF-2100/SF-2200/SF-2300/SF-2400 only — Install electrical receptacle(s) for plug-in adapter(s) — 120 VAC, 1 amp service for each 6 VDC plug-in adapter used.
  International models may be supplied with a 220 VAC/VDC transformer.
- Hot and cold water supply lines or tempered water supply line
- Drain lines
  International models are supplied with 1/2" G water connections.

Important:

- *INSTALL ALL ELECTRICAL WIRING IN ACCORDANCE WITH NATIONAL/LOCAL CODES AND REGULATIONS.*
- *INSTALL ALL PLUMBING IN ACCORDANCE WITH APPLICABLE CODES AND REGULATIONS.*
- *A 6 VDC STEP-DOWN ADAPTER MUST BE USED FOR HARDWIRE APPLICATIONS.*
- *BEFORE CONNECTING COPPER TUBE(S) OR FLEX HOSE(S) TO SUPPLY STOP(S), FLUSH ALL WATER LINES UNTIL WATER IS CLEAR.*

TOOLS REQUIRED FOR INSTALLATION

- Electric drill for drilling anchor holes (1/4" or 6 mm drill bit)
- Straight blade and phillips blade screwdrivers
- Open end wrenches (9, 11, 13, 16, 22 mm)

The components supplied with International Models of the SF Series Faucets may vary from what is shown in this manual. Consult factory to identify variations that may apply to your market.

FAUCET ROUGH-IN

SF-2100 / SF-2150 Series

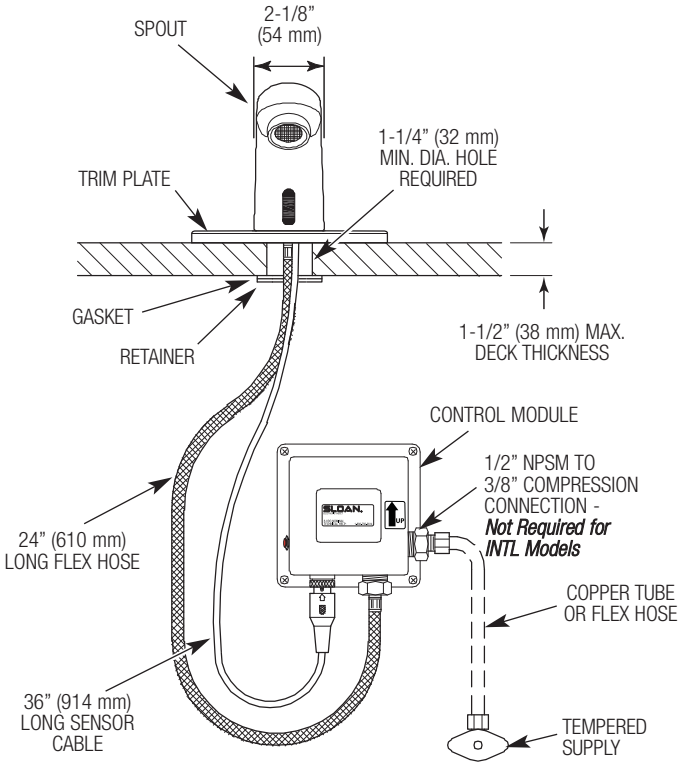

HOT AND COLD WATER SUPPLY APPLICATIONS

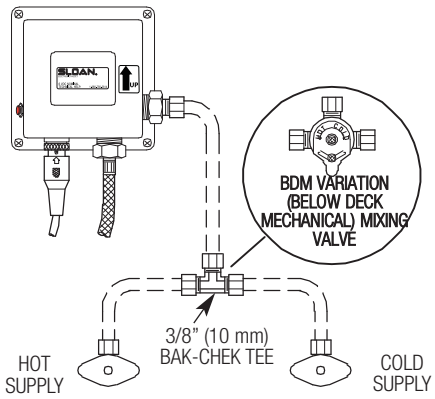

*COPPER TUBES OR FLEX HOSES - **Flex Hoses Supplied Only with some International Models.***

SF-2200 / SF-2250 Series

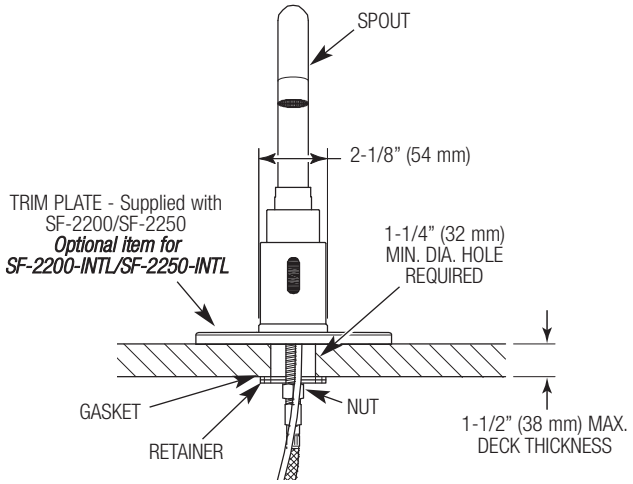

SF-2300 / SF-2350 Series

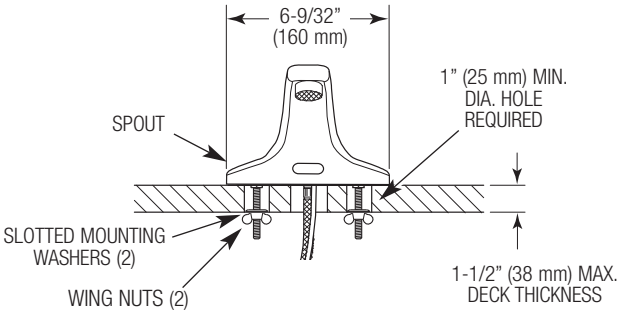

SF-2400 / SF-2450 Series

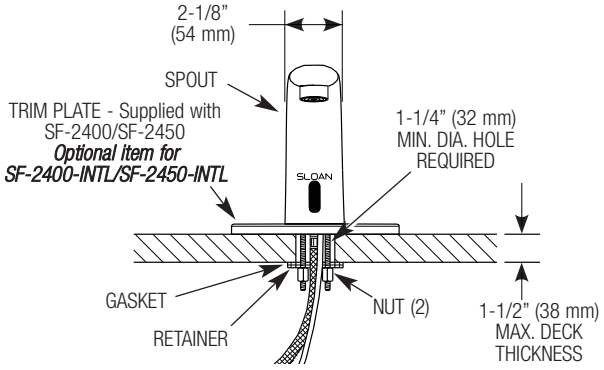

SIDE VIEW

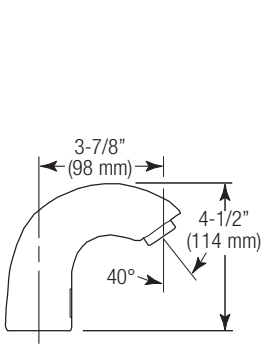

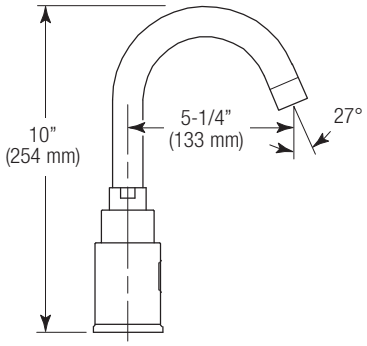

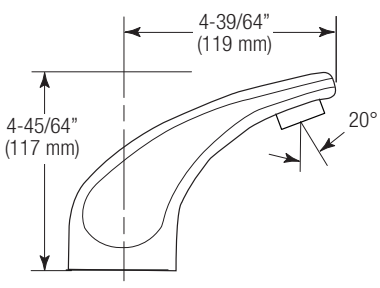

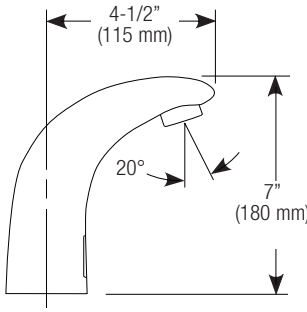

1A - SF-2100/2150 & SF-2400/2450 SERIES: INSTALL FLEX HOSE AND MOUNTING STUDS

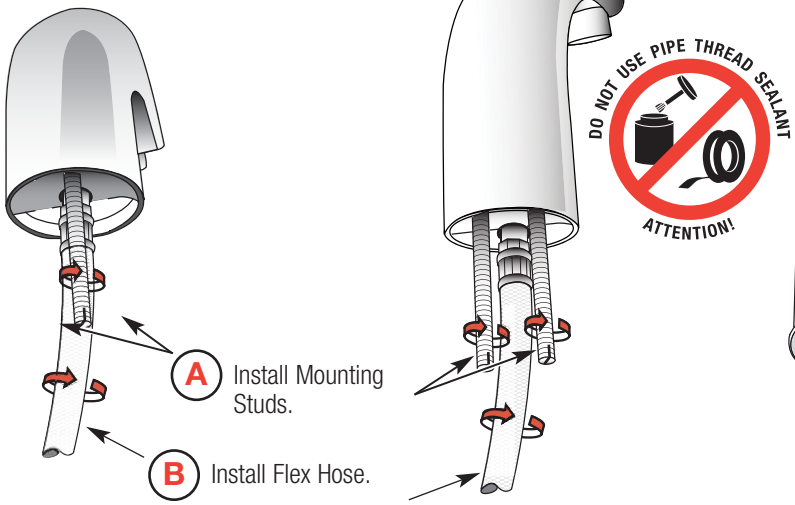

1B - SF-2200/2250 & SF-2300/2350 SERIES: INSTALL FLEX HOSE

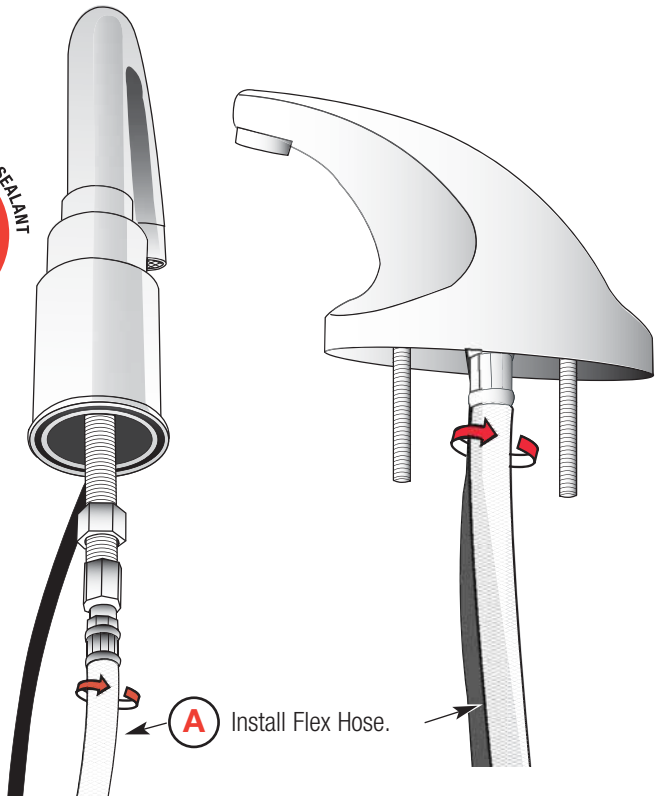

2A - SF-2100/2150, SF-2200/2250, & SF-2400/2450 SERIES: INSTALL SPOUT, TRIM PLATE AND SPACER

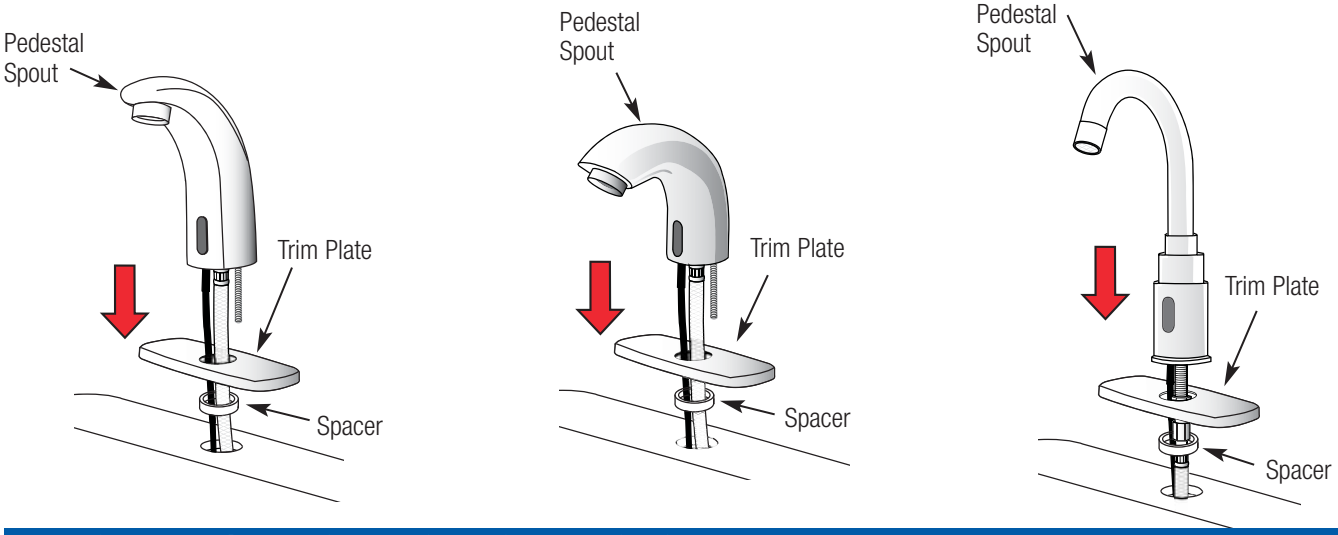

2B - SF-2300/2350 SERIES: INSTALL SPOUT

A Apply a bead of plumbers putty around the outside of the Faucet underbody.

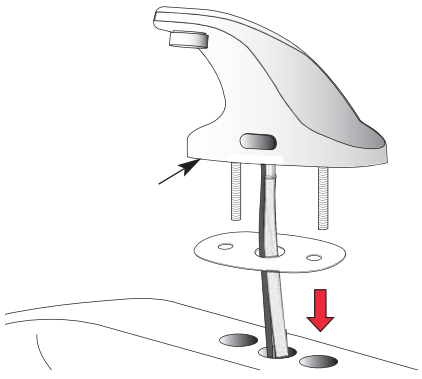

3A - SF-2100/2150 & SF-2200/2250 SERIES: INSTALL RUBBER GASKET, RETAINER, AND RETAINER NUT(S)

A Secure Faucet to the Deck by installing Rubber Gasket, Retainer and Retainer Nut(s). Tighten Retainer Nuts securely. Do not overtighten.

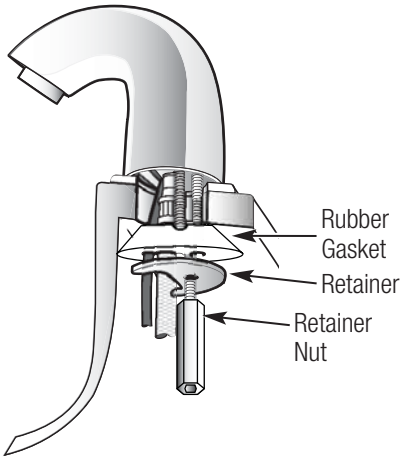

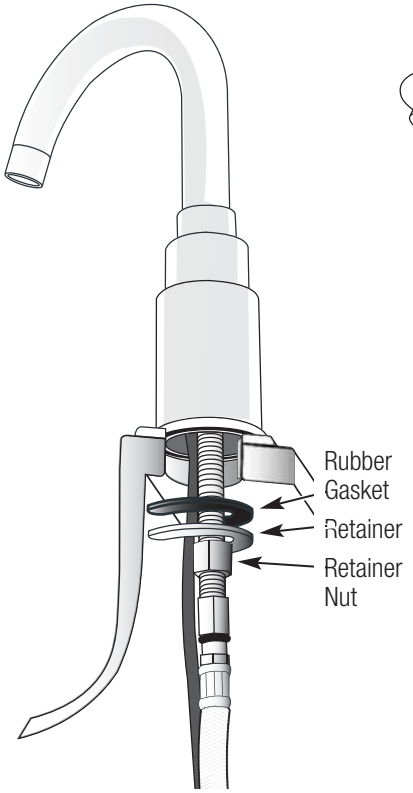

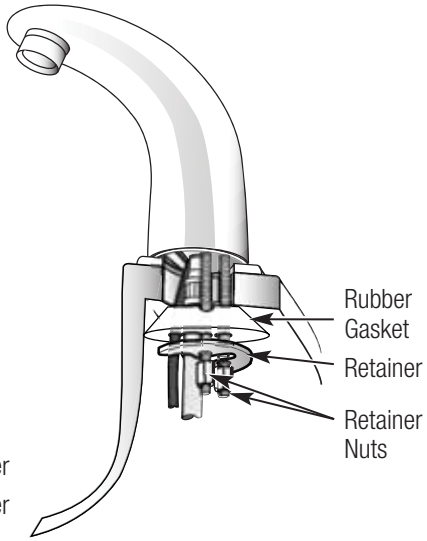

3B - SF-2300/2350 SERIES: INSTALL SLOTTED MOUNTING WASHERS AND WING NUTS

A Secure Faucet to the Deck by installing Slotted Mounting Washers and Wing Nuts. Tighten Wing Nuts securely. Do not overtighten.

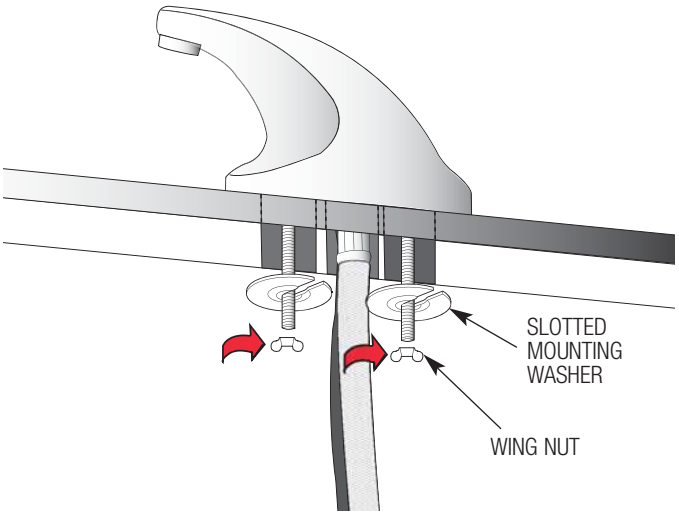

4 - INSTALL CONTROL MODULE IN AN APPROPRIATE LOCATION (SEE ROUGH-INS)

A Using Control Module as a template, mark mounting holes on wall. When installed, Sensor Cable and Flex Hose need some slack.

B Drill 1/4" (6 mm) hole at each mounting hole location.

C Install Plastic Anchors (supplied) into mounting holes in wall.

D Install Control Module to wall using Fasteners supplied.

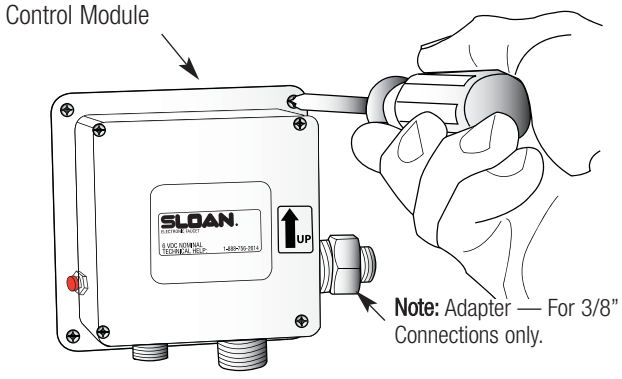

5 - CONNECT SENSOR CABLE AND WATER LINES TO CONTROL MODULE

A Connect Sensor Cable (from Faucet).

B Connect Flex Hose (from Faucet).

C Connect Water Line **(supplied with INTL Models only)** to Supply Stop and Control Module.



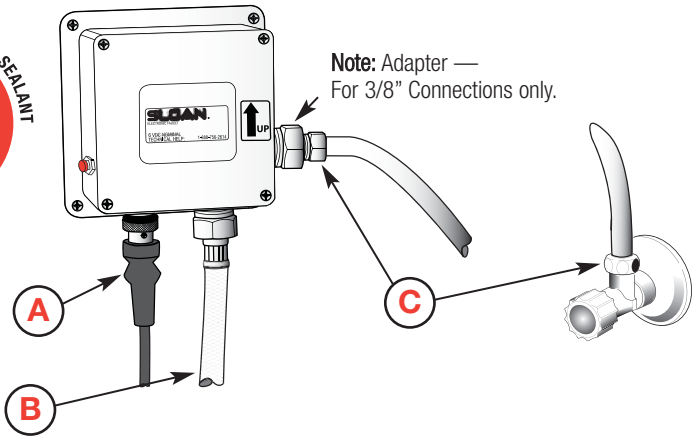

6 - INSTALL BATTERIES

A Loosen Cover Screws and remove Cover from Control Module.

B Remove Battery Compartment, remove compartment lid using screwdriver and install four (4) AA-size batteries (supplied) as indicated by the (+) and (—) symbols inside the Battery Compartment. Replace compartment lid and tighten with screwdriver.

C Reinstall Battery Compartment into the Control Module.

D Reinstall Control Module Cover using all four (4) Screws.

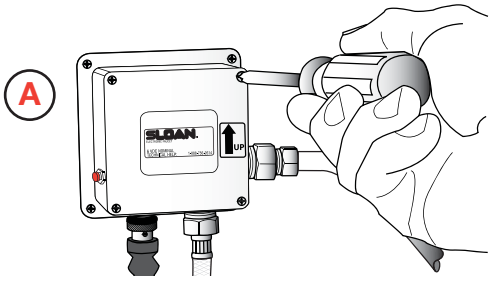

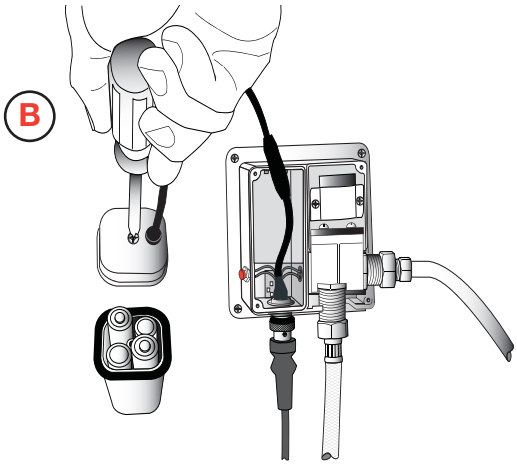

7A - CONNECT ADAPTER (ADAPTER POWERED MODELS ONLY) AND TURN ON WATER SUPPLY

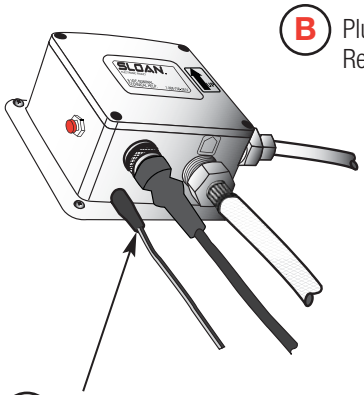

B Plug Adapter into Receptacle.

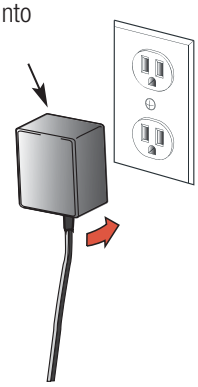

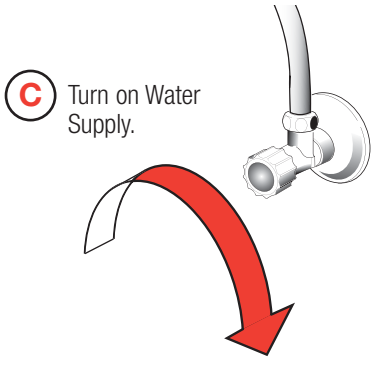

A Plug Adapter Jack into Control Module.

7B - GANG ADAPTER INSTALLATION

To connect multiple faucets to a single adapter, use the Sloan SFP-35-A Gang Adapter Kit (Purchase Separately).

The SFP-35-A Gang Adapter Kit is supplied with cables to connect up to 6 faucets. To connect up to 8 faucets, purchase 2 additional SFP-38 Cable Splitters separately.

A Connect the Adapter and Cables to the Sensor Faucets as shown below.

For complete installation, refer to instructions packaged with Gang Adapter Kit.

SFP-35-A Gang Adapter Kit is available in 120 VAC only

!!!!IMPORTANT!!!!
DO NOT PLUG IN THE ADAPTER UNTIL ALL CONNECTIONS ARE MADE

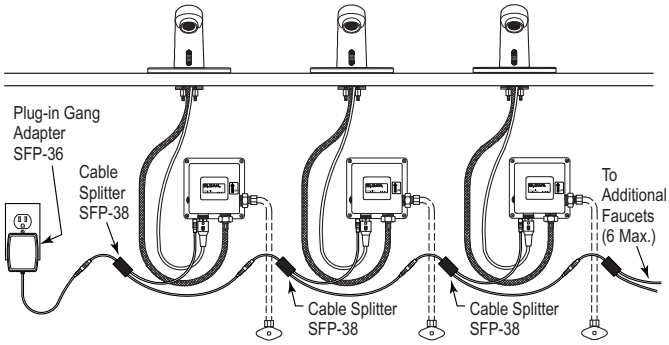

8 - SET RANGE ADJUSTMENT

NOTE: *Sensor Range can be adjusted after power is supplied to the Faucet (battery or hardwire).*

A Hold the red button in until the sensor flashes (approximately 3 - 6 seconds).

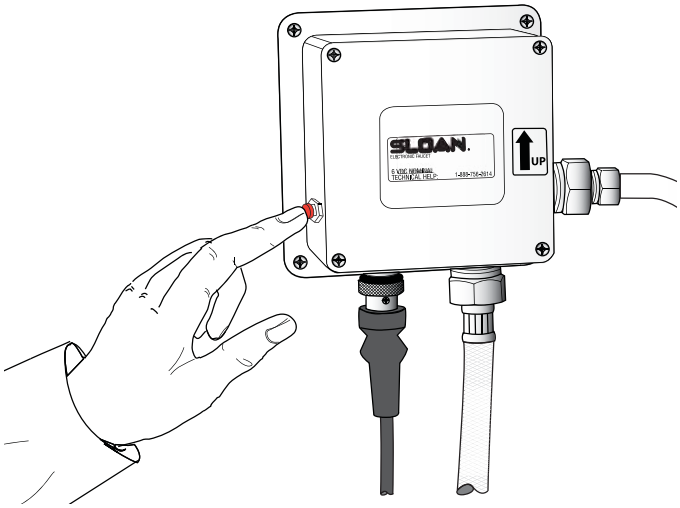

B Place your hand (or card) in front of the sensor at the distance you desire the Faucet to activate. Leave hand or card at this location while the sensor range is setting. Remove hand or card when the sensor light turns off. The sensor range is now set.

NOTE: *The sensor range is dependent on the distance of your hand or card while the sensor is in range setting mode.*

NOTE: *If no target is placed in front of the sensor, the sensor range will set to its longest distance.*

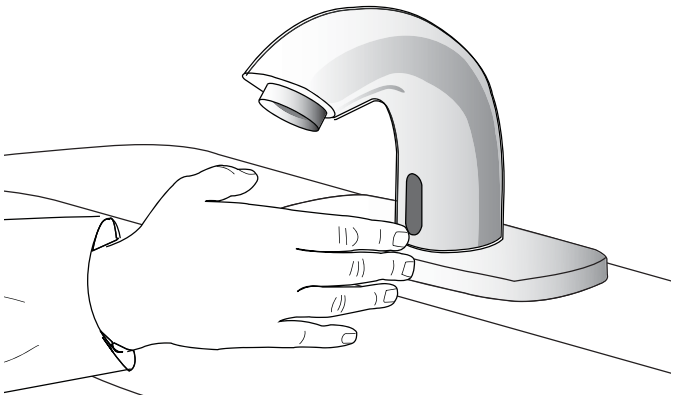

9 - SET WATER FLOW TIME-OUT

NOTE: *There are two available time-out settings; 7 seconds and 70 seconds.*

A Hold the red button in for more than six seconds. The water flow time-out setting will change from 7 seconds to 70 seconds or from 70 seconds to 7 seconds.

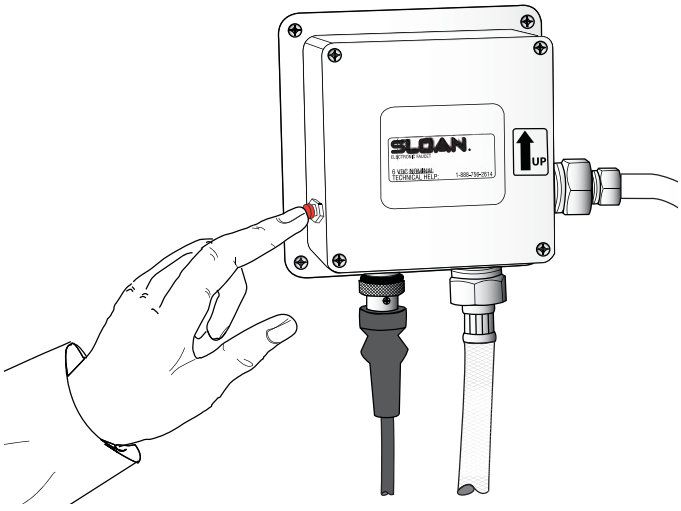

10 - TEST FAUCET OPERATION



1. Place hands under faucet. Solenoid valve should “click,” LED in sensor window should blink once and water should flow from the spout.

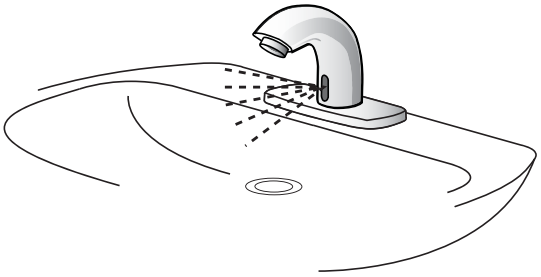

2. When hands are removed, the water flow should stop.

CARE AND CLEANING OF CHROME AND SPECIAL FINISHES

DO NOT USE abrasive or chemical cleaners (including chlorine bleach) to clean Faucets that may dull the luster and attack the chrome or special decorative finishes. Use **ONLY** mild soap and water, then wipe dry with clean cloth or towel.

While cleaning the bathroom tile, protect the Faucet from any splattering of cleaner. Acids and cleaning fluids will discolor or remove chrome plating.



TROUBLESHOOTING GUIDE

1. Faucet delivers water in an uncontrolled manner.

A. Faucet is defective. Contact Sloan Valve Company Installation Engineering Department (see below).

2. Faucet does not deliver any water when Sensor is activated.

INDICATOR: Solenoid valve produces an audible “CLICK.”

A. Water supply stop(s) closed. Open water supply stop(s).

B. Water strainer in control module is clogged. Close supply stops and remove water inlet line at control module. Remove, clean and reinstall strainer and water inlet line. Replace strainer if required.

INDICATOR: Solenoid valve DOES NOT produce an audible “CLICK.”

A. Batteries low (battery powered models). Replace batteries.

B. Power failure (adapter powered models). Check power supply.

3. Faucet delivers only a slow flow or dribble when Sensor is activated.

A. Water supply stop(s) are partially closed. Completely open water supply stop(s).

B. Water strainer in control module is clogged. Close supply stops and remove water inlet line at control module. Remove, clean and reinstall strainer and water inlet line. Replace strainer if required.

C. Aerator is clogged. Remove, clean, and reinstall aerator. Replace aerator if required.

D. Valve is defective. Contact Sloan Valve Company Installation Engineering Department (see below).

4. Faucet does not stop delivering water or continues to drip after user is no longer detected.

A. Valve is defective. Contact Sloan Valve Company Installation Engineering Department (see below).

5. The water temperature is too hot or too cold on a Faucet connected to hot and cold supply lines.

A. Supply Stops are not adjusted properly. Adjust Supply Stops.

When assistance is required, please contact Sloan Valve Company Installation Engineering Department at:
1-888-SLOAN-14: (1-888-756-2614)

PARTS LIST

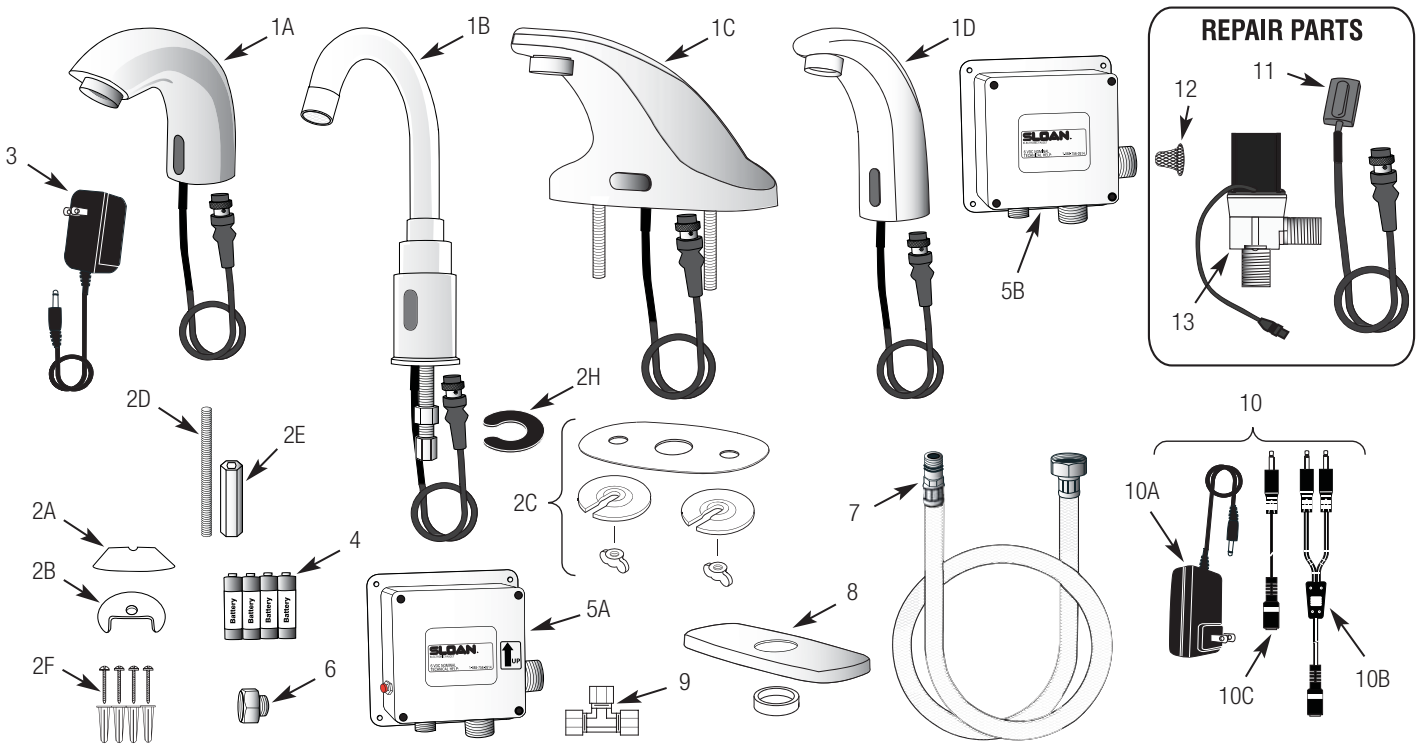

Item No.	Part No.	Description
1A	—	Pedestal Faucet Assembly w/ Outlet (Models SF-2100/SF-2150)
1B	—	Gooseneck Faucet Assembly w/ Outlet (Models SF-2200/SF-2250)
1C	—	Faucet Assembly w/ Outlet (Models SF-2300/SF-2350)
1D	—	Pedestal Faucet Assembly w/ Outlet (Models SF-2400/SF-2450)
2	SFP-4	Mounting Hardware Kit, (Models SF-2100/SF-2150 and SF-2400/SF-2450) includes Items: 2A, 2B, 2D, 2E and 2F
	SFP-5	Mounting Hardware Kit, (Models SF-2200/SF-2250) includes Items: 2F, 2G and 2H
	SFP-16	Mounting Hardware Kit, (Models SF-2300/SF-2350) includes Items: 2C and 2F
2A	—	Beveled Gasket
2B	—	Metal Retainer
2C	ETF-546-A	Gasket, Washers (2), Wing Nuts (2) & Compression Fitting
2D	—	Threaded Stud
2E	—	Retainer Nut
2F	—	Screws and Anchors for Control Module
2G	—	Metal Washer
2H	—	Gasket
3	SFP-6	Plug-in Adapter (110 VAC/6 VDC) – (USA)
	SFP-20	Plug-in Adapter Type G Rectangular (220 VAC/6 VDC) – (UK)
	SFP-25	Plug-in Adapter Type C Round Pin (220 VAC/6 VDC) – (EUR)
	SFP-26	Plug-in Adapter Type A Flat Blade (220 VAC/6 VDC) – (CH)
4	—	Batteries-AA size (4)
5A	SFP-40-A	6-Pin Control Module w/ range adjustment button
6	—	Inlet adapter - 1/2" NPSM to 3/8" Compression Connection (not supplied with most international models)
7	SFP-10	Flex Hose, Control Module to Spout
8	SFP-11	Trim Plate w/ Spacer (not supplied with most international models)
9	ETF-617-A	3/8" Bak-Chek® Tee Compression Fitting

Item No.	Part No.	Description
Accessories		
10	SFP-35-A	Gang Adapter Kit (100-240 VAC/ 6 VDC), includes:
10A	SFP-36	Plug-in Gang Adapter (100-240 VAC/ 6 VDC)
10B	SFP-38	Cable Splitter, 51"/1300 mm (5 included in kit)
10C	SFP-37	Cable Extension, 51"/1300 mm
Repair Parts		
11	SFP-41	Sensor (adjustable range - identified by a 6 pin connector)
12	SFP-15	Strainer (located in water inlet of control module)
13		Solenoid Assembly for SF control module
IMPORTANT:		*Sloan added the range adjustment feature in August 2008 for faucets made prior to August 2008 use the following replacement items:*
11	SFP-34	Sensor (identified by a 4 pin connector)
5B	SFP-8	4-pin Control Module
Replacement Aerators & Spray Heads (not shown)		
Models: SF-2100/2150, SF-2300/2350 & SF-2400/2450		
	SFP-13	0.5 gpm/1.9 Lpm Spray head
	SFP-23	2.2 gpm/8.3 Lpm Aerator
	SFP-15	0.5 gpm/1.9 Lpm Vandal Resistant Spray Head
	SFP- 24	2.2 gpm/8.3 Lpm Vandal Resistant Aerator
Models: SF-2200/2250		
	SFP-12	Gooseneck Spout w/ outlet
	SFP-14	1.5 gpm/5.7 Lpm Laminar Spray Head

Items without part numbers are not sold separately

The information contained in this document is subject to change without notice.

SLOAN VALVE COMPANY • 10500 SEYMOUR AVENUE • FRANKLIN PARK, IL 60131
Phone: 1-800-982-5839 or 1-847-671-4300 • Fax: 1-800-447-8329 or 1-847-671-4380 • www.sloanvalve.com
Copyright © 2010 SLOAN VALVE COMPANY
Code No: 0816496 – Rev. 3 (08/10)