TEMP-GARD III

Pressure Balancing Shower/
Tub & Shower Valve
Z7300 Series

❑Operation ❑ Installation ❑ Maintenance Instructions ❑ Replacement Kits

INSTALLATION OF TEMP-GARD III SHOWER VALVE
(Refer to page 4 for part no.)

1. Install rough piping and valve body as shown. **Do not use PEX or CPVC CTS piping from valve to tub spout, as the reduced ID results in too much back pressure for valve to function properly**. When facing valve, HOT "H" is on left and COLD "C" is on right. Tub port "T" should face down and shower port "S" should face upward. The ears on the valve at the 5 o'clock and 11 o'clock positions may be used to attach the valve to framing of wall if necessary.

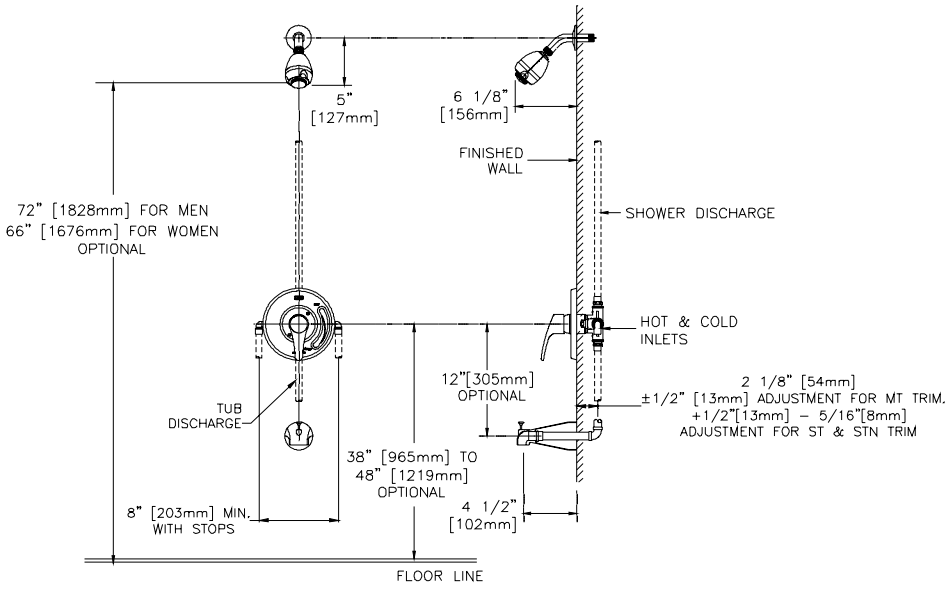

FIGURE 1

WARNING: Caution should be taken when heating valve for sweat connections to avoid damaging internal rubber and plastic components in valve.

✓ Z7300SSMTHW

FOR OPTIMUM VALVE PERFORMANCE, BALANCE SUPPLY PRESSURES TO LESS THAN 5 PSI PRESSURE DIFFERENTIAL BETWEEN HOT AND COLD WATER SUPPLIES.

2. Always install valve with mud guard (23) so that the indicated surface on mud guard is flush with finished wall. The hole in the wall should be 4" in diameter.
3. If valve is to be used for a shower only, wrap threads on tub plug (24) with teflon tape and install plug into tub port on shower valve.
4. When the final outer wall is finished remove mud guard and open both supply stops on valve by turning counter clockwise.
5. Loosen and remove escutcheon (19) from valve. Carefully remove cartridge (10) from valve by holding cartridge as close to the valve body (1) as possible and wiggling back and forth until cartridge comes out of the valve. Place thumb and finger on gray part of cartridge to remove it, as shown in Figure 4.
6. With the cartridges removed from all valves in the system, turn on water supply and flush the system of any debris. If the water coming out of the valve while flushing is going behind finished wall, a hose bib flushing out kit (RK7300-20HB) may be used to allow the water to be directed to a drain by attaching a garden hose to valve.
7. **If hot and cold supply inlets are reversed simply remove cartridge and reinstall with cartridge flipped 180°. The handle adaptor (12) will need to be readjusted. To adjust handle adaptor remove and turn 180°. Handle should always turn through cold, then hot. Reinstall cartridge and tighten escutcheon to 150 in lbs. The system will need to be flushed again before installing shower heads.**
8. **To adjust temperature limit stop (11), turn valve to desired hottest temperature, remove temperature limit stop (11) turn clockwise and reinstall so that the white protrusion on cartridge is touching the red protrusion on the temperature limit stop.**
9. After all flushing is done install shower heads and check system for leaks.

AquaSpec® is a registered trademark of Zurn Industries, LLC
©2010 Zurn Industries, LLC

10. Assemble external trim to valve.
    - •Hand tighten escutcheon nut (20) on valve.
    - •Remove tape from gasket (15) and adhere gasket (centered on the top half of the back of cover plate (16)) so that 1/4 of the width of the gasket is sticking out beyond the back of the cover plate, see Figure 2.
    - •Place cover plate over escutcheon (19) and fasten with screws (18).
    - •Install handle onto cartridge with handle pointed down. Tighten set screw.

The ZURN TEMP-GARD III Pressure Balancing Shower Valve is equipped with an adjustable temperature limit stop. The temperature limit stop device is to be used to limit the valve handle from being turned to undesired hot water discharge temperatures. To adjust the temperature limit stop, see step 8 of the installation and reference figure 3.
IMPORTANT: Failure to adjust the temperature limit stop properly increases the chances for serious injury.

WARNING: This shower system may not protect the user from scalding when there is a failure of other temperature controlling devices elsewhere in the plumbing system.

Notes:

When there is a shutoff valve installed after the control valve, there shall be stop and check valves on the inlets. This is to eliminate hot and cold cross-connection in the event the valve handle is left on. Specify suffix "-SC" for ASSE approved checks.

If valve is going to be installed in “Thin Wall Application” such as a fiberglass or panel wall, it is recommended that an optional wall flange (RK7300-WF) be used. This wall flange is used to sandwich the wall between the valve body and cover plate.

OPERATION:

Cover Gasket:
Position gasket in back side of cover with the adhesive against the cover and the open end at bottom as shown.

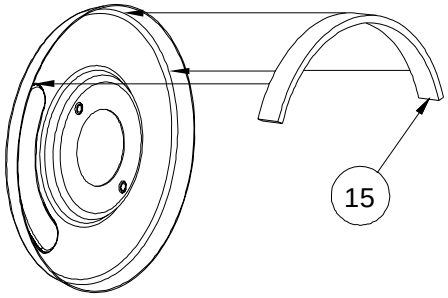

FIGURE 2

Adjusting Temperature Limit Stop:
Lift and turn temperature limit stop clockwise to reduce maximum temperature.

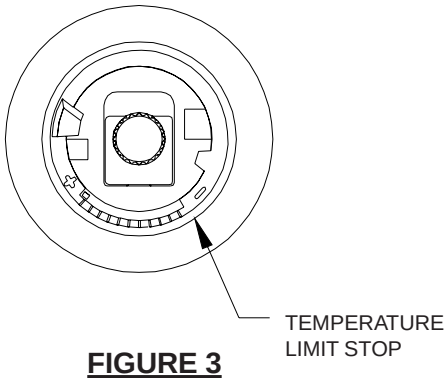

FIGURE 3

The main handle of the Temp-Gard III valve is for temperature control only. To turn valve on, the handle is turned counterclockwise through the cold position, to the warm and then to the hot position. The range of motion on the handle is 140°.

MAINTENANCE and SERVICE:

1. Remove handle (21) and cover plate (16).
2. Using a flathead screwdriver, turn both service stops (7) clockwise until they bottom out. This allows the valve to be serviced without turning off the main water supply. If service stops need to be repaired or replaced, the main water supply must be turned off and the service stop retainer (9) must be removed by turning counterclockwise.
3. Remove escutcheon nut (20) and escutcheon (19).
4. Remove cartridge (10) by placing thumb and forefinger where shown in figure 4 and carefully wiggling cartridge. **Caution: If cartridge is not removed in manner described damage may occur to cartridge.**

5. To determine if the piston in cartridge is functioning properly, shake cartridge side to side. The piston should make a clicking sound.
6. If no sound is heard when shaking, place cartridge in vinegar for at least 8 hours to remove scale and debris. If still no sound is heard replace cartridge with RK7300-CART cartridge replacement kit.

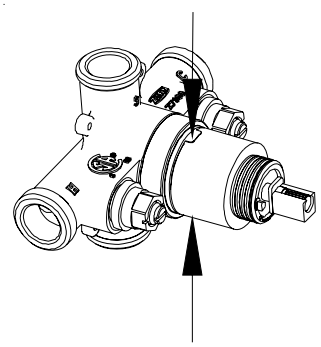

HOLD HERE TO REMOVE CARTRIDGE

FIGURE 4

TROUBLE SHOOTING:

PROBLEM	CAUSE	SOLUTION
Valve will not flow water.	Hot and cold water not turned on. Service Stops not open.	Be sure both suplies are turned on and service stops are open. Valve will not operate unless both HOT and COLD water inlets have pressure.
Water volume from valve is inconsistent during operation.	Pressure balancing piston housed in cartridge (10) assembly is blocked from free movement by foreign matter.	Remove and service cartridge as described in steps 1 through 6 of the MAINTENANCE and SERVICE section.
Valve delivers an insufficient quantity of Hot or Cold water.		
Temperatures fluctuate without moving temperature handle.		
Valve does not deliver desired hot water temperature.	Valve designed to deliver mixed hot and cold water in all handle positions.	Increase system hot water temperature.
Temperature out of valve reduces gradually during use.	Supply system is running out of hot water.	Reduce maximum flow rate out of valve or shower head. This will allow longer period of use before reduction of hot water supply.
Valve makes loud noise.	Piston in cartridge is moving back and forth because of a large pressure differential between the HOT and COLD water lines.	Alter the water system such that the pressure differential at all shower valves is no more than 5 psi.

Proper performance is dependent upon licensed, qualified personnel performing regular, periodic testing according to ZURN specifications and prevailing governmental & industry standards and codes and upon following these installation instructions. Failure to do so releases ZURN of any liability that it might otherwise have with respect to that device. Such failure could also result in an improperly functioning device.

PARTS BREAKDOWN

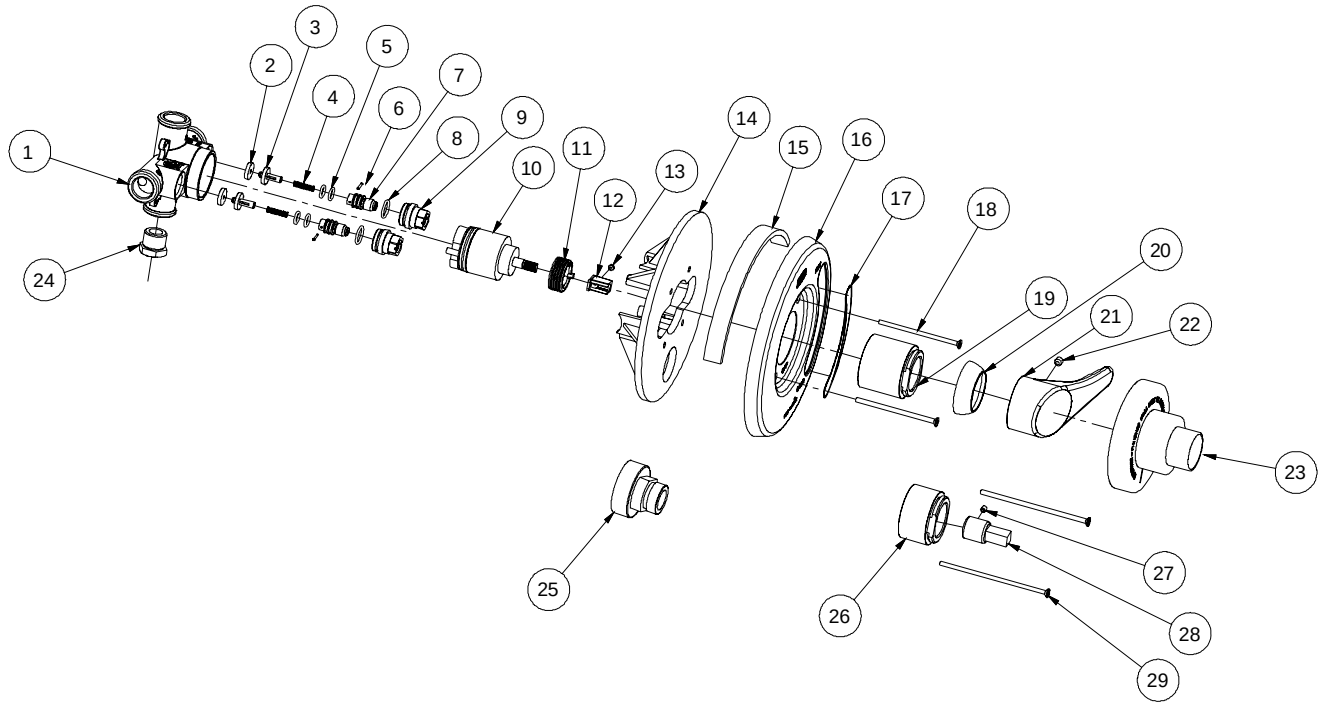

REPLACEMENT KITS:

RK7300-CART
CARTRIDGE KIT
ITEM NO.
10. Pressure Balancing Cartridge
11. Temperature Limit Stop
12. Handle Adaptor
13 Set Screw

RK7300-50A
SERVICE/CHECK STOP KIT
(2) PER.
ITEM NO.
2. Service Stop Washer
3. Service Stop Plunger
4. Spring
5. Stem O-Ring
6. Service Stop Roll Pin
7. Service Stop Stem
8. Retainer O-Ring
9. Service Stop Retainer

RK7300-WF
WALL FLANGE KIT (OPTIONAL)
ITEM NO.
14. Wall Flange

RK7300-LH
LEVER HANDLE KIT
ITEM NO.
21. Handle
22. Set Screw

RK7300-11AE-001
COVER SCREWS KIT
(2) PER
ITEM NO.
18. Cover Plate Screw, 3”

RK7300-EXT
EXTENSION KIT (OPTIONAL)
ITEM NO.
26. Escutcheon Extension
27. Set Screw
28. Stem Extension
29. Cover Plate Screws, 4”

RK7300-20HB
FLUSHING OUT KIT (OPTIONAL)
ITEM NO.
25. Hose Bib

RK7300-8MT-002
COVER PLATE KIT
ITEM NO.
16. Cover Plate w/Etched Lettering
17. Temperature Indicator

PARTS:
1. Valve Body
2. Service Stop Washer
3. Service Stop Plunger
4. Spring
5. Stem O-Ring
6. Service Stop Roll Pin
7. Service Stop Stem
8. Retainer O-Ring
9. Service Stop Retainer
10. Pressure Balancing Cartridge
11. Temperature Limit Stop
12. Handle Adaptor
13. Set Screw
14. Wall Flange
15. Gasket (7000-90).
16. Cover Plate w/Etched Lettering
17. Temperature Indicator
18. Cover Plate Screw, 3”
19. Escutcheon (7300-81MT)
20. Escutcheon Nut (7300-9MT)
21. Handle
22. Set Screw
23. Mud Guard (7300-17)
24. Tub Plug (7300-7B)
25. Hose Bib
26. Escutcheon Extension
27. Set Screw
28. Stem Extension
29. Cover Plate Screw, 4”

AquaSpec® Temp-Gard® Terms and Conditions

Price and Terms of Payment

Terms are net, payable 30 days from date of invoice. All pricing is in U.S. currency. The Buyer shall pay all sales, consumers, or other applicable taxes. A 1-1/2% per month service charge will be added to all past due invoices. Annual rate 18% of the outstanding balance due.

Minimum invoice $100.00. Zurn reserves the right to apply a minimum order charge to equal $100.00. All orders are subject to credit approval by the Zurn Credit Department prior to the acceptance of an order. Orders may be refused, delivery may be withheld, or shipment stopped in transit without any liability on Zurn's part if in its sole opinion, the Buyer's ability to pay for the merchandise or the terms and conditions herein are in doubt. The Credit Department of Zurn must be notified of potential pricing errors within 30 days of invoice date.

Freight

All sales are F.O.B. Zurn's plant. Zurn will allow full freight allowance only on Zurn AquaSpec® Temp-Gard® orders of $3,000 or more. This full freight allowance is when the shipment is within the continental United States and has a destiny of a Buyer's standard address of job location. Routing of shipment shall be determined at the sole discretion of Zurn. Multi product line orders totaling $7,500 can be combined to meet FFA guidelines. Shipping dates are estimates and time of delivery is not the essence of this sale of the contract therefore. Under no circumstances will Zurn have any responsibility on account of any delays in manufacture, transportation, or otherwise.

Limited Warranty

All goods sold hereunder are warranted to be free from defects in material and factory workmanship for a period of three years from the date of purchase. We will replace goods at no cost that prove defective provided Zurn is notified in writing of such defect and the goods are returned to Zurn prepaid at Falconer, New York, with evidence that they have been properly maintained and used in accordance with instructions. ZURN SHALL NOT BE RESPONSIBLE FOR ANY LABOR CHARGES OR ANY LOSS, INJURY, OR DAMAGES WHATSOEVER, INCLUDING, BUT NOT LIMITED TO, INCIDENTAL OR CONSEQUENTIAL DAMAGES. The sole and exclusive remedy shall be limited to the replacement of the defective goods. Before installation and use, the purchaser shall determine the suitability of the product for his intended use and the purchaser assumes all risk and liability whatever in the connection therewith. Where permitted by law, THE IMPLIED WARRANTY OF MERCHANTABILITY IS LIMITED TO A PERIOD OF THREE YEARS AND SHALL BE LIMITED SOLELY TO THE REPLACEMENT OF THE DEFECTIVE GOODS. All weights stated in Zurn catalogs and lists are approximate and are not guaranteed.

Illustrations of Typical Installations

The typical installations for various products found in each product section are intended to illustrate the products and potential options for the use of these products. Under no circumstances are they to be construed as recommended installation procedures. Consult local codes and project specifications for proper installation instructions.

Returned Goods

Standard cataloged material may be returned only with written permission of Zurn. Returned goods are subject to a 25% restocking charge of total saleable material returned, plus cost of reconditioning, if necessary, to make material sellable. Transportation charges are the responsibility of the Buyer. Credit allowance will be in the form of merchandise credit only – not cash credit. The value of a return must total at least $100.00 to qualify for credit allowance. No credit will be allowed for parts unless originally ordered and invoiced as parts. No credit will be allowed for discontinued or made-to-order items. Items that have been specially made are not subject to return or cancellation except by special negotiation. Material must be returned within two years of invoice date for credit to be issued.

Shortage/Damage Claims

Notification of material shortages or incorrect filling of orders must be made to Zurn within 10 days of receipt. No claims over three months old will be honored. Buyer agrees to make all complaints for damage in transit or "short count" directly to the carrier; before the contents are unloaded have the carrier agent's acknowledgement of such damage noted on the bill of lading and to present to the carrier its agent's acknowledgement of such damaged material with formal claim covering said damage.

General

Zurn reserves the right to make changes in design or equipment of any item or product without incurring any obligation on previously sold items, and to discontinue items at any time, without notice. Possession of this Catalog or other sales literature is not to be construed as an offer to sell. All orders are subject to acceptance by the general office of Zurn in Falconer, New York.

Catalog printed in U.S.A.