TruFLOW™ Visual Flow Meter

Submittal Information
Revision C: July 20, 2010

Project Information

Job Name:

Location: | Part No. Ordered:

Engineer: | Date Submitted:

Contractor: | Submitted By:

Manufacturer's Representative: | Approved By:

Technical Data

Material:	UNS C3850 Brass; Pyrex® Glass
Maximum Working Pressure/Temperature:	220°F at 145 psi (104°C at 10 bar)
Precision:	±0.05 gpm
Measuring Range:	0.15 gpm to 0.8 gpm 0.40 gpm to 2.0 gpm
Connection:	R20 QS-style

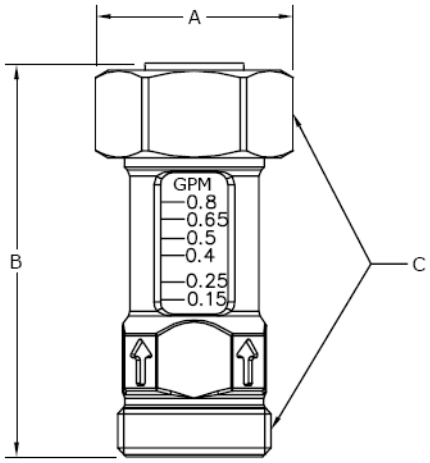

Product Information and Application Use

Use the TruFLOW™ Visual Flow Meter on TruFLOW Jr. and TruFLOW Classic Manifolds to measure the flow of hydronic radiant loops. The meter is available in a low range (A2640015), which measures 0.15 to 0.80 gpm and a high range (A2640027), which measures 0.25 to 2.00 gpm.

✓	Description	Part Number	A	B	C	Weight
☐	TruFLOW Visual Flow Meter, 0.15 to 0.8 gpm	A2640015	1.20"	2.66"	R20	0.28 lbs.
☐	TruFLOW Visual Flow Meter, 0.25 to 2.0 gpm	A2640027	1.20"	2.66"	R20	0.28 lbs.

Installation

Assemble the TruFLOW Visual Flow Meter on the return manifold and observe that the water flows in the same direction as the arrow on the body of the meter. The TruFLOW Visual Flow Meter may be installed in a vertical or horizontal position. Do not install the TruFLOW Visual Flow Meter upside-down (arrow pointing downward) as it will affect the accuracy of the reading. Do not use any solvent-based cleaner to clean the measuring windows.

Accessories

A2620009: Replacement O-ring for TruFLOW Flow/Temperature Meter

Standards

ASTM F877

Codes

N/A

Listings

NSF-rfh; R20: ISO 228-G ¾ B

Related Applications

Radiant Heating and Cooling Systems
Snow and Ice Melting Systems
Permafrost Protection Systems
Turf Conditioning Systems

Contact Information

Uponor, Inc.
5925 148th Street West
Apple Valley, MN 55124 USA
Phone: (800) 321-4739
Fax: (952) 891-2008
www.uponor-usa.com

Uponor Ltd.
2000 Argentia Rd., Plaza 1, Ste. 200
Mississauga, ON L5N 1W1 CANADA
Phone: (888) 994-7726
Fax: (800) 638-9517
www.uponor.ca