GS650YRVITM

Installation and Operating Manual

RESIDENTIAL GAS WATER HEATERS

state WATER HEATERS

www.statewaterheaters.com

POWER VENTED GAS MODELS
WITH HOT SURFACE IGNITION
NOT FOR USE IN MANUFACTURED (MOBILE) HOMES



WARNING: If the information in these instructions is not followed exactly, a fire or explosion may result causing property damage, personal injury or death.

— **Do not store or use gasoline or other flammable vapors and liquids in the vicinity of this or any other appliance.**

— **WHAT TO DO IF YOU SMELL GAS:**

- **Do not try to light any appliance.**
- **Do not touch any electrical switch; do not use any phone in your building.**
- **Immediately call your gas supplier from a neighbor's phone. Follow the gas supplier's instructions.**
- **If you cannot reach your gas supplier, call the fire department.**

— **Installation and service must be performed by a qualified installer, service agency or the gas supplier.**



⚠ WARNING

Read and understand instruction manual and safety messages before installing, operating or servicing this water heater.

Failure to follow instructions and safety messages could result in death or serious injury.

Instruction manual must remain with water heater.

• For Your Safety •

AN ODORANT IS ADDED TO THE GAS USED BY THIS WATER HEATER.

ALL TECHNICAL AND WARRANTY QUESTIONS: SHOULD BE DIRECTED TO THE LOCAL DEALER FROM WHOM THE WATER HEATER WAS PURCHASED. IF YOU ARE UNSUCCESSFUL, PLEASE CONTACT THE COMPANY LISTED ON THE RATING PLATE ON THE WATER HEATER.

KEEP THIS MANUAL IN THE POCKET ON HEATER FOR FUTURE REFERENCE WHENEVER MAINTENANCE ADJUSTMENT OR SERVICE IS REQUIRED.

TABLE OF CONTENTS

TABLE OF CONTENTS 2
SAFE INSTALLATION, USE AND SERVICE 3
GENERAL SAFETY 4
INTRODUCTION 6
- Qualified Installer Or Service Agency 6
- Preparing For The Installation 6

INSTALLATION REQUIREMENTS FOR THE COMMONWEALTH OF MASSACHUSETTS 7
TYPICAL INSTALLATION 9
- Get To Know Your Water Heater - Gas Models (List Referencing Figures 1-7) 9
- Replacement Parts And Deliming Products 10
- Combo Heating Inlet And Outlet Side Taps 10
- Water Piping - Mixing Valve Usage 11
  - Mixing Valves
- Water Heater Operation 12
- Electrical Requirements & Wiring Diagram 13

SAFETY LOCKOUTS 14
- High Limit Controls (Energy Cut Off) 14
  - Thermostat/Water Temperature
  - Blower High Limit Switch
- Blower Air Pressure Switch 14
- Flammable Vapor Sensor 14

LOCATING THE NEW WATER HEATER 15
- Facts To Consider About The Location 15
- Storage Of Flammable Liquids 15
  - Clearances to combustibles
  - Floors with carpeting
  - Clearance for servicing
- Insulation Blankets 17
- Air Requirements 17
- Unconfined Space 17
- Unusually Tight Construction 17
- Confined Space 17
- Direct Vent Appliances 18
- Exhaust Fans 18
- Fresh Air Openings For Confined Spaces 18
- Chemical Vapor Corrosion 19

INSTALLING THE NEW WATER HEATER 20
- Water Piping 20
- Space Heating And Potable Water Systems 20
- Combo Heating 21
  - System Requirements
  - Installation
- Closed Water Systems 22
- Thermal Expansion 22
- Temperature-Pressure Relief Valve 23
  - T&P valve discharge pipe requirements:
  - Temperature-Pressure Relief Valve and Pipe Insulation
- High Altitude Installation 24
- Gas Piping 24
- Sediment Traps/Dirt Leg 25
- Filling The Water Heater 26
- Venting 26
- Termination Clearances Sidewall Power Vent 27
- Blower Assembly Installation 28
- Installation Of Vent System 28
- Planning The Vent System 28
- High Ambient Temperature Installations 28
- Polypropylene Vent Systems 29
- Condensate 29
- Exhaust Venting 30
  - Important Notes and Warnings
  - Venting terminations and sizing
  - Vent screen installation
  - Calculating Equivalent Feet
  - Venting instructions
  - Vent pipe connection to blower
  - Different coupling installations according to vent sizes
- Blower Exhaust Direction 35
- Vent Pipe Preparation 35
- Installation Checklist 38

LIGHTING INSTRUCTIONS 39
OPERATING THE TEMPERATURE CONTROL SYSTEM 40
- Gas Control Valve/Thermostat 41

FOR YOUR INFORMATION 42
- Start Up Conditions 42
  - Condensate
  - Thermal expansion
  - Closed water systems
  - Smoke/odor
  - Strange sounds
- Operational Conditions 42
  - Smelly water
- “Air” In Hot-Water Faucets 43

PERIODIC MAINTENANCE 44
- General Upkeep 44
- Venting System Inspection 44
- Blower Maintenance 44
- Cleaning The Blower. 44
- Burner Operation And Inspection 45
- Combustion Chamber And Burner Cleaning 46
- Housekeeping 46
- Anode Rod Inspection 46
- Anode Rod 46
  - Removing Anode Rod:
  - Installing Anode Rod:
- Temperature-Pressure Relief Valve Test 47
- Draining And Flushing 48
  - To drain the water heater storage tank:
  - To flush the water heater storage tank:

LEAKAGE CHECKPOINTS 49
- Service 49

REFERENCE PARTS LISTING 50
TROUBLESHOOTING GUIDELINES 52
- Resetting The Heater Control 54
- Lockouts 54
  - Soft Lockout
  - Hard Lockout
- Ignition State And Timing 55
- System Status And Error Codes 55

LIMITED WARRANTY 58

SAFE INSTALLATION, USE AND SERVICE

Your safety and the safety of others is extremely important in the installation, use and servicing of this water heater. Many safety-related messages and instructions have been provided in this manual and on your own water heater to warn you and others of a potential injury hazard. Read and obey all safety messages and instructions throughout this manual. It is very important that the meaning of each safety message is understood by you and others who install, use or service this water heater.

	**This is the safety alert symbol. It is used to alert you to potential personal injury hazards. Obey all safety messages that follow this symbol to avoid possible injury or death.**

DANGER	**DANGER indicates an imminently hazardous situation which, if not avoided, will result in death or injury.**
WARNING	**WARNING indicates a potentially hazardous situation which, if not avoided, could result in death or injury.**
CAUTION	**CAUTION indicates a potentially hazardous situation which, if not avoided, could result in minor or moderate injury.**
CAUTION	**CAUTION used without the safety alert symbol indicates a potentially hazardous situation which, if not avoided, could result in property damage**

All safety messages will generally tell you about the type of hazard, what can happen if you do not follow the safety message and how to avoid the risk of injury.

The California Safe Drinking Water and Toxic Enforcement Act requires the Governor of California to publish a list of substances known to the State of California to cause cancer, birth defects or other reproductive harm and requires businesses to warn of potential exposure to such substances.

This product contains a chemical known to the State of California to cause cancer, birth defects or other reproductive harm. This appliance can cause low level exposure to some of the substances listed in the Act.

IMPORTANT DEFINITIONS

Qualified Installer: A qualified installer must have ability equivalent to a licensed tradesman in the fields of plumbing, air supply, venting and gas supply, including a thorough understanding of the requirements of the National Fuel Gas Code as it relates to the installation of gas fired water heaters. The qualified installer must also be familiar with the design features and use of flammable vapor ignition resistant water heaters and have a thorough understanding of this Installation and Operating manual.

Service Agency: A service agency also must have ability equivalent to a licensed tradesman in the fields of plumbing, air supply, venting and gas supply, including a thorough understanding of the requirements of the National Fuel Gas Code as it relates to the installation of gas fired water heaters. The service agency must also have a thorough understanding of this Installation and Operating manual, and be able to perform repairs strictly in accordance with the service guidelines provided by the manufacturer.

Gas Supplier: The Natural Gas or Propane Utility or service who supplies gas for utilization by the gas burning appliances within this application. The gas supplier typically has responsibility for the inspection and code approval of gas piping up to and including the Natural Gas meter or Propane storage tank of a building. Many gas suppliers also offer service and inspection of appliances within the building.

GENERAL SAFETY



⚠ WARNING

Read and understand instruction manual and safety messages before installing, operating or servicing this water heater.

Failure to follow instructions and safety messages could result in death or serious injury.

Instruction manual must remain with water heater.



⚠ WARNING

Fire Hazard

For continued protection against risk of fire:

- Do not install water heater on carpeted floor.
- Do not operate water heater if flood damaged.

⚠ DANGER

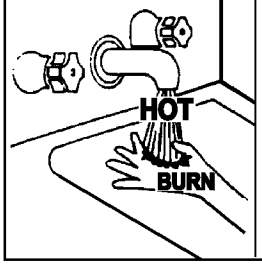

Water temperature over 125°F can cause severe burns instantly resulting in severe injury or death.

Children, the elderly and the physically or mentally disabled are at highest risk for scald injury.

Feel water before bathing or showering.

Temperature limiting valves are available.

Read instruction manual for safe temperature setting.

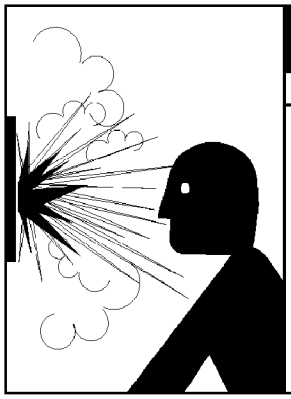

⚠ WARNING

Explosion Hazard

- Overheated water can cause water tank explosion.
- Properly sized temperature and pressure relief valve must be installed in opening provided.

⚠ WARNING

Fire or Explosion Hazard

- Do not store or use gasoline or other flammable vapors and liquids in the vicinity of this or any other appliance.
- Avoid all ignition sources if you smell gas.
- Do not expose water heater control to excessive gas pressure.
- Use only gas shown on rating plate.
- Maintain required clearances to combustibles.
- Keep ignition sources away from faucets after extended period of non-use.



Read instruction manual before installing, using or servicing water heater.



GENERAL SAFETY

CAUTION

Improper Installation, use and service may result in property damage.

- Do not operate water heater if flood damaged.
- Inspect anode rods regularly, replace when significantly depleted.
- Install in location with drainage.
- Fill tank with water before operation.
- Properly sized thermal expansion tanks are required on all closed water systems.

Refer to this manual for installation and service.



⚠ WARNING

- Before servicing the water heater, make sure the blower assembly is unplugged or the electrical supply to the water heater is turned "OFF".
- Label all wires prior to disconnection when servicing controls. Wiring error can cause improper and dangerous operation. Verify proper operation after servicing.
- Failure to do this could result in death, serious bodily injury, or property damage.

⚠ WARNING

Breathing Hazard - Carbon Monoxide Gas

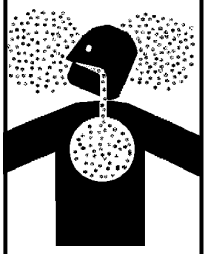

- **Install vent system in accordance with codes.**
- **Do not operate water heater if flood damaged.**
- **For operation above 10,100', a high altitude orifice must be installed.**
- **Do not operate if soot buildup is present.**
- **Do not obstruct water heater air intake with insulating jacket.**
- **Do not obstruct blower air intake.**
- **Do not place chemical vapor emitting products near water heater.**
- **Gas and carbon monoxide detectors are available.**
- **No vent damper installation is compatible with this power vented water heater.**

Breathing carbon monoxide can cause brain damage or death. Always read and understand instruction manual.

⚠ DANGER

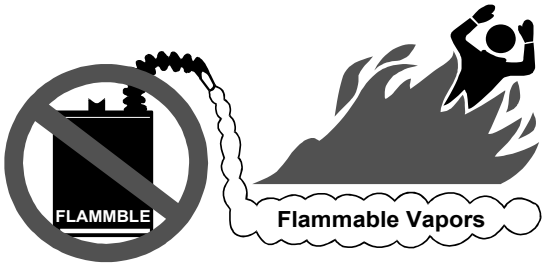

⚠ Vapors from flammable liquids may explode and catch fire causing death or severe burns.

Do not use or store flammable products such as gasoline, solvents or adhesives in the same room or area near the water heater.

Keep flammable products:
1. far away from heater,
2. in approved containers,
3. tightly closed and
4. out of children's reach.

Water heater has a main burner and hot surface igniter. The hot surface igniter:
1. can be triggered at any time and
2. the hot surface will ignite flammable vapors.

Vapors:
1. cannot be seen,
2. are heavier than air,
3. go a long way on the floor and
4. can be carried from other rooms to the the electodes by air currents.

Installation: Do not install the water heater where flammable products will be stored or used.

INTRODUCTION

Thank You for purchasing this water heater. Properly installed and maintained, it should give you years of trouble free service.

Abbreviations found in this Installation and Operating manual:

- CSA - Canadian Standards Association
- ANSI - American National Standards Institute
- NFPA - National Fire Protection Association
- ASME - American Society of Mechanical Engineers
- UL - Underwriters Laboratories Inc.
- AHRI - Air Conditioning, Heating and Refrigeration Institute.

This gas-fired water heater is design certified by CSA International, under **Water Heater Standard ANSI Z21.10.1 • CSA 4.1** (current edition).

QUALIFIED INSTALLER OR SERVICE AGENCY

Installation and service of this water heater requires ability equivalent to that of a Qualified Agency (as defined by ANSI below) in the field involved. Installation skills such as plumbing, air supply, venting, gas supply and electrical supply are required in addition to electrical testing skills when performing service.

ANSI Z223.1 2006 Sec. 3.3.83: "Qualified Agency" - "Any individual, firm, corporation or company that either in person or through a representative is engaged in and is responsible for (a) the installation, testing or replacement of gas piping or (b) the connection, installation, testing, repair or servicing of appliances and equipment; that is experienced in such work; that is familiar with all precautions required and that has complied with all the requirements of the authority having jurisdiction."

If you are not qualified (as defined by ANSI above) and licensed or certified as required by authority having jurisdiction to perform a given task, do not attempt to perform any of the procedures described in this manual. If you do not understand the instructions given in this manual do not attempt to perform any procedures outlined in this manual.

PREPARING FOR THE INSTALLATION

1. Read the "General Safety Information" section of this manual first and then entire manual carefully. If you don't follow safety rules, the water heater will not operate properly. It could cause DEATH, SERIOUS BODILY INJURY AND/OR PROPERTY DAMAGE. This manual contains instructions for installation, operation, and maintenance of the gas-fired water heater. It also contains warnings throughout the manual that you must read and be aware of. All warnings and instructions are essential to proper operation of the water heater and your safety. Since we cannot put everything on the first few pages, READ ENTIRE MANUAL BEFORE ATTEMPTING TO INSTALL OR OPERATE THE WATER HEATER.
2. The installation must conform with these instructions and local code authority having jurisdiction. In absence of local codes, installation must comply with current editions of the National Fuel Gas Code, ANSI Z223.1/ NFPA 54 and National Electrical Code, NFPA 70. All documents are available from:

   CSA International,
   8501 East Pleasant Valley Road,
   Cleveland, Ohio, United States
   44131-5575.

   NFPA documents are also available from:
   National Fire Protection Association,
   1 Batterymarch Park,
   Quincy, MA 02269.

3. The water heater, when installed, must be electrically grounded in accordance with the local codes or in the absence of local codes: the National Electrical Code (NFPA 70).
4. If after reading this manual you have any questions or do not understand any portion of the instructions, call the local gas utility or the manufacturer whose name appears on the rating plate.
5. Carefully plan the place where you are going to put the water heater. Correct combustion, vent action, and vent pipe installation are very important in preventing death from possible carbon monoxide poisoning and fires (see Figure 14 & Figure 15). Examine the location to ensure the water heater complies with the "Locating the New Water Heater" section in this manual.
6. For installation in California, this water heater must be braced, anchored, or strapped to avoid falling or moving during an earthquake. See instructions for correct installation procedures. Instructions may be obtained from:

   California Office of the State Architect,
   400 P Street,
   Sacramento, CA 95814.

7. Massachusetts Code requires this water heater to be installed In accordance with Massachusetts 248-CMR 2.00: State Plumbing Code and 248-CMR 5.00.
8. Complies with California Health and Safety code 116875 (known as AB-1953) and with weighted average maximum of 0.25% lead.

INSTALLATION REQUIREMENTS FOR THE COMMONWEALTH OF MASSACHUSETTS

COMMONWEALTH OF MASSACHUSETTS
For all side wall terminated, horizontally vented power vent, direct vent and power direct vent gas fueled water heaters installed in every dwelling, building or structure used in whole or in part for residential purposes, including those owned or operated by the Commonwealth and where the side wall exhaust vent termination is less than seven (7) feet above finished grade in the area of the venting, including but not limited to decks and porches, the following requirements shall be satisfied:

INSTALLATION OF CARBON MONOXIDE DETECTORS
At the time of installation of the side wall horizontal vented gas fueled equipment, the installing plumber or gasfitter shall observe that a hard wired carbon monoxide detector with an alarm and battery back-up is installed on the floor level where the gas equipment is to be installed. In addition, the installing plumber or gasfitter shall observe that a battery operated or hard wired carbon monoxide detector with an alarm is installed on each additional level of the dwelling, building or structure served by the sidewall horizontal vented gas fueled equipment. It shall be the responsibility of the property owner to secure the services of qualified licensed professionals for the installation of hard wired carbon monoxide detectors.
In the event that the side wall horizontally vented gas fueled equipment is installed in a crawl space or an attic, the hard wired carbon monoxide detector with alarm and battery back-up may be installed on the next adjacent floor level.
In the event that the requirements of this subdivision can not be met at the time of completion of installation, the owner shall have a period of thirty (30) days to comply with the above requirements provided that during said thirty (30) day period, a battery operated carbon monoxide detector with an alarm shall be installed.
APPROVED CARBON MONOXIDE DETECTORS

Each carbon monoxide detector as required in accordance with the above provisions shall comply with NFPA 720 and be ANSI/ UL 2034 listed and CSA certified.

SIGNAGE
A metal or plastic identification plate shall be permanently mounted to the exterior of the building at a minimum height of eight (8) feet above grade directly in line with the exhaust vent terminal for the horizontally vented gas fueled heating appliance or equipment. The sign shall read, in print size no less than one- half (1/2) inch in size, “GAS VENT DIRECTLY BELOW. KEEP CLEAR OF ALL OBSTRUCTIONS.”

INSPECTION
The state or local gas inspector of the side wall horizontally vented gas fueled equipment shall not approve the installation unless, upon inspection, the inspector observes carbon monoxide detectors and signage installed in accordance with the provisions of 248 CMR 5.08(2)(a) 1 through 4.

EXEMPTIONS
The following equipment is exempt from 248 CMR 5.08(2) (a) 1 through 4:
1. The equipment listed in Chapter 10 entitled “Equipment Not Required To Be Vented” in the most current edition of NFPA 54 as adopted by the Board; and
2. Product Approved side wall horizontally vented gas fueled equipment installed in a room or structure separate from the dwelling, building, or structure used in whole or in part for residential purposes.

MANUFACTURER REQUIREMENTS - GAS EQUIPMENT VENTING SYSTEM PROVIDED
When the manufacturer of Product Approved side wall horizontally vented gas equipment provides a venting system design or venting system components with the equipment, the instructions provided by the manufacturer for installation of the equipment and the venting system shall include:
1. Detailed instructions for the installation of the venting system design or the venting system components; and
2. A complete parts list for the venting system design or venting system.

MANUFACTURER REQUIREMENTS - GAS EQUIPMENT VENTING SYSTEM NOT PROVIDED
When the manufacturer of Product Approved side wall horizontally vented gas fueled equipment does not provide the parts for venting the flue gases, but identifies “special venting systems,” the following requirements shall be satisfied by the manufacturer:
1. The referenced “special venting system” instructions shall be included with the appliance or equipment installation instructions; and
2. The “special venting systems” shall be Product Approved by the Board, and the instructions for that system shall include a parts list and detailed installation instructions.

A copy of all installation instructions for all Product Approved side wall horizontally vented gas fueled equipment, all venting instructions, all parts lists for venting instructions, and/or all venting design instructions shall remain with the appliance or equipment at the completion of the installation.

INSTALLATION GRAPHIC: GAS-FIRED POTABLE WATER HEATING/SPACE HEATING SYSTEM

- **If your water heater will be installed in the Commonwealth of Massachusetts, refer to the following graphic during installation and during modifications to the water supply system.**

TYPICAL MIXING VALVE INSTALLATION
COMBINATION SPACE HEATING / POTABLE WATER HEATING SYSTEM

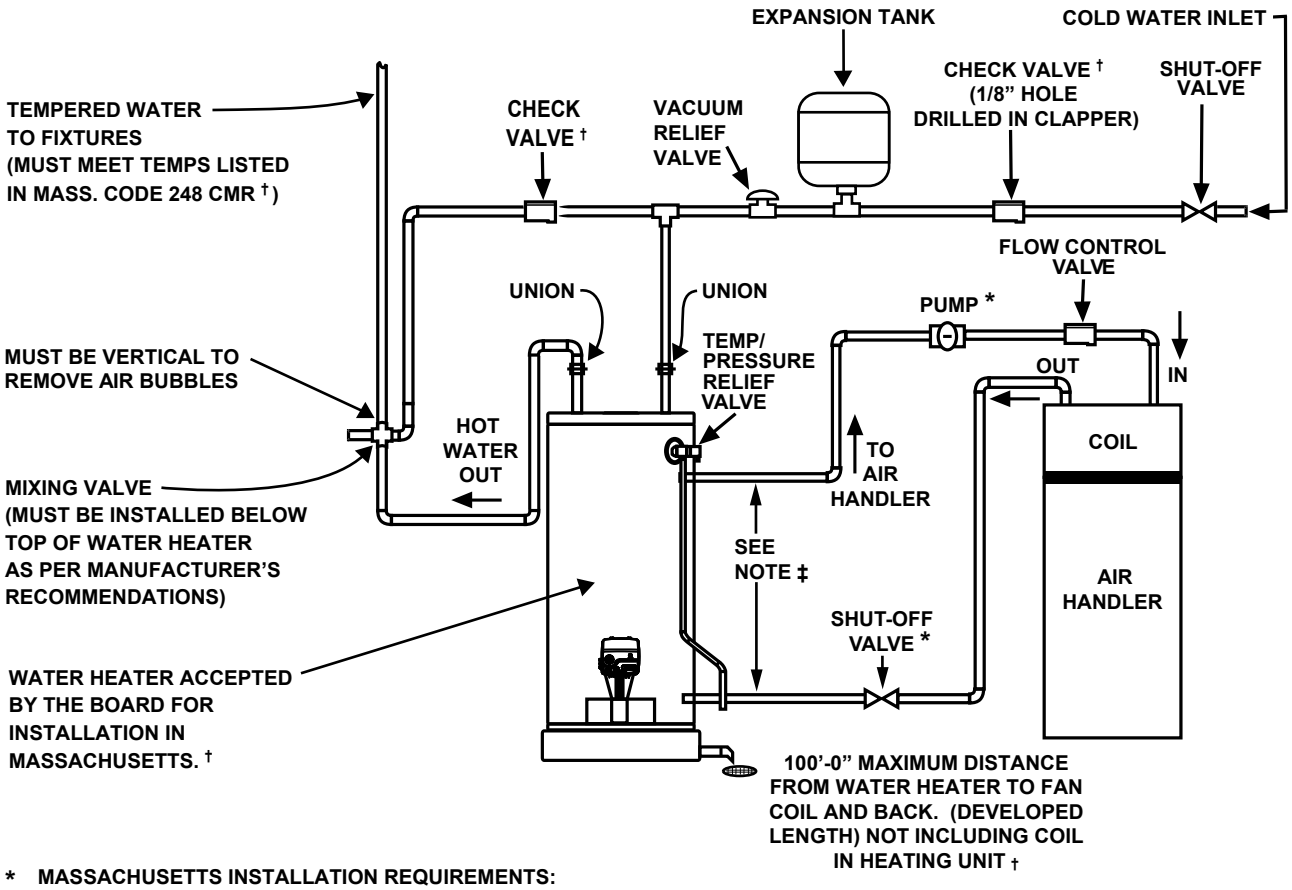

*** MASSACHUSETTS INSTALLATION REQUIREMENTS:**

1.) CONNECT ELECTRONICALLY-CONTROLLED TIMER TO AN ALL-BRONZE PUMP. PUMP MUST ACTIVATE EVERY 6 HOURS FOR 60 SECONDS. TURN PUMP TIMER OFF BEFORE CLOSING PIPING LOOP SHUT-OFF VALVE.

2.) ALL WATER PIPING MUST BE INSTALLED AND INSULATED IN ACCORDANCE WITH MASSACHUSETTS CODE (248 CMR & 780 CMR).

3.) PIPING LOOP BETWEEN WATER HEATER AND AIR HANDLER MUST BE INSTALLED IN COMPLIANCE WITH 248 CMR.

† REQUIRED FOR MASSACHUSETTS.

‡ PIPING FROM THE TOP OF THE WATER HEATER WITH TEES IS ACCEPTABLE.

TYPICAL INSTALLATION

GET TO KNOW YOUR WATER HEATER - GAS MODELS (list referencing Figures 1-7)

1. Vent Termination Elbow with Rodent Screen
2. *Vent Pipe
3. *Vent Pipe Coupling (if required)
4. *Vent Pipe Elbow (long radius)
5. Blower High Limit Switch (see Figure 6)
6. T&P Valve
7. Cold-Water Inlet Nipple/Diptube
8. Baffle Assembly
9. * Discharge Pipe
10. Gas Control Valve/Thermostat (Honeywell)
11. Gas Valve Electronic Control Module And Cover (Honeywell)
12. Drain Valve
13. Outer Gas Door
14. Manifold Door Assembly (behind outer door) (see Figure 3 & Figure 4)
15. *Floor Drain
16. *Metal Drain Pan
17. Flammable Vapor Sensor (under cover) (see Figure 5)
18. **Combo Heating System Return Inlet (Optional)
19. Air Inlet Snorkel
20. **Combo Heating System Supply Outlet (Optional)
21. Blower with Power Cord (see also Figure 6)
22. Air Switch (inside box) (see Figure 6)
23. Junction Box (see Figure 6)
24. Junction Box Cover (see Figure 6)
25. Air Tubing (see Figure 6)
26. Rubber Coupling (see also Figure 6)
27. Gear Clamp (see also Figure 6)
28. Flue Collector
29. Hot-Water Outlet Nipple
30. Anode (under cap)
31. ***Control Harness
32. Flexible Manifold Tube (see Figure 3 & Figure 4)
33. Viewport (see Figure 3 & Figure 4)
34. Flame Sensor Rod (see Figure 3 & Figure 4)
35. Gas Orifice (see Figure 3 & Figure 4)
36. Sheet Metal Burner (see Figure 3 & Figure 4)
37. Gas Manifold (see Figure 3 & Figure 4)
38. Hot-Surface Igniter (see Figure 3 & Figure 4)
39. Manifold Door Gasket (see Figure 3 & Figure 4)
40. Manifold Door (see Figure 3 & Figure 4)
41. Two Piece Grommet With Clip (see Figure 3 & Figure 4)
42. *Inlet Water Shut-off Valve
43. *Gas Supply*
44. *Main Manual Gas Shut-off Valve
45. *Ground Joint Union (gas connection)
46. *Sediment Trap/Dirt Leg
47. *Union (water connection)
48. Rating Plate
49. *Thermal Expansion Tank (required for all closed systems)

*, **, ***, **** see notes on following page

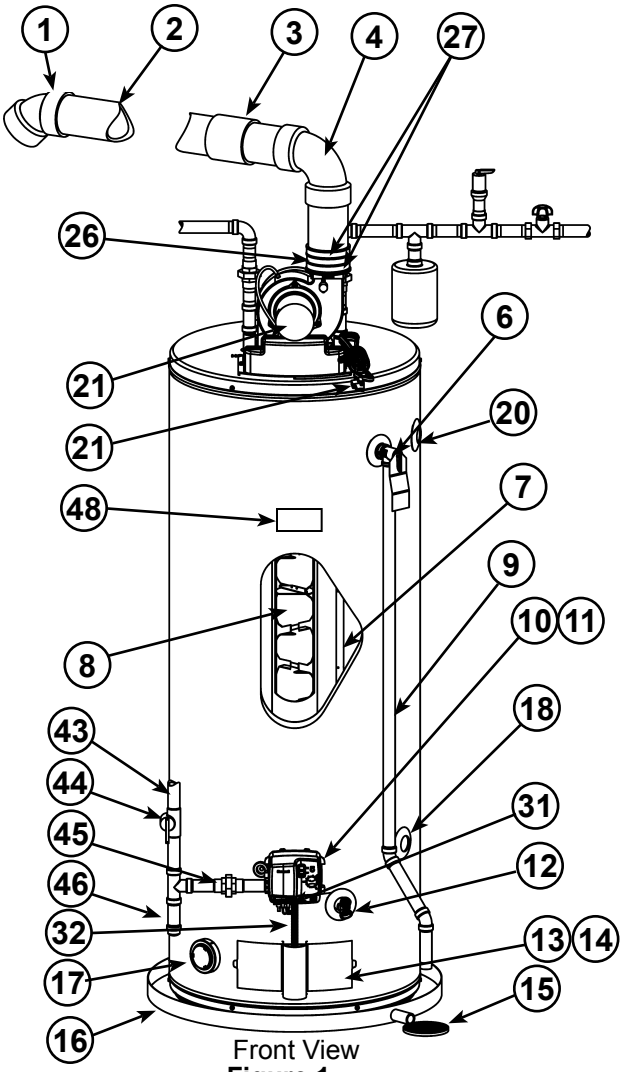

Front View
Figure 1.

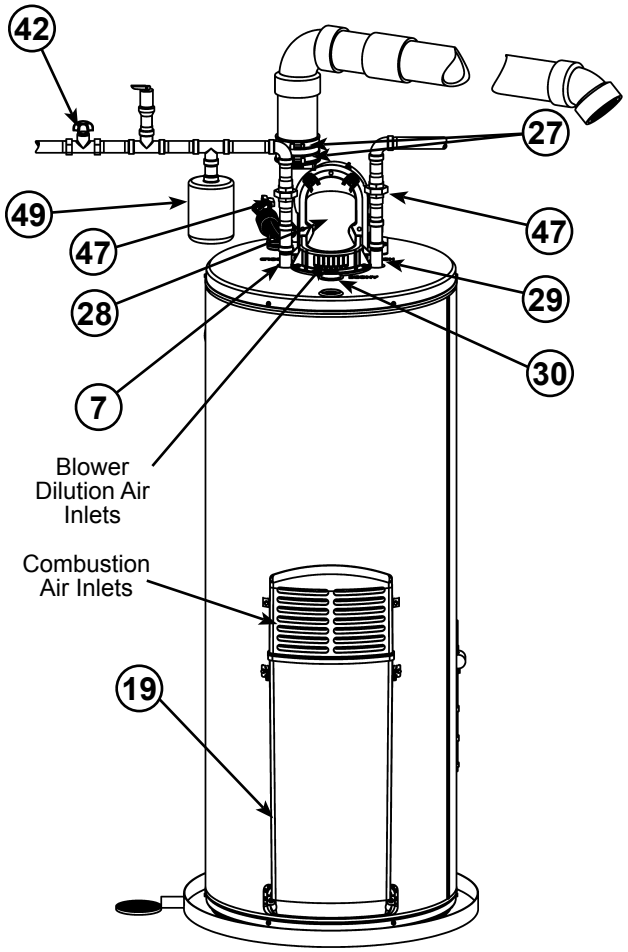

Rear View
Figure 2.

Natural gas and Propane main burner with igniter assembly for 40k to 50k Btu/hr models

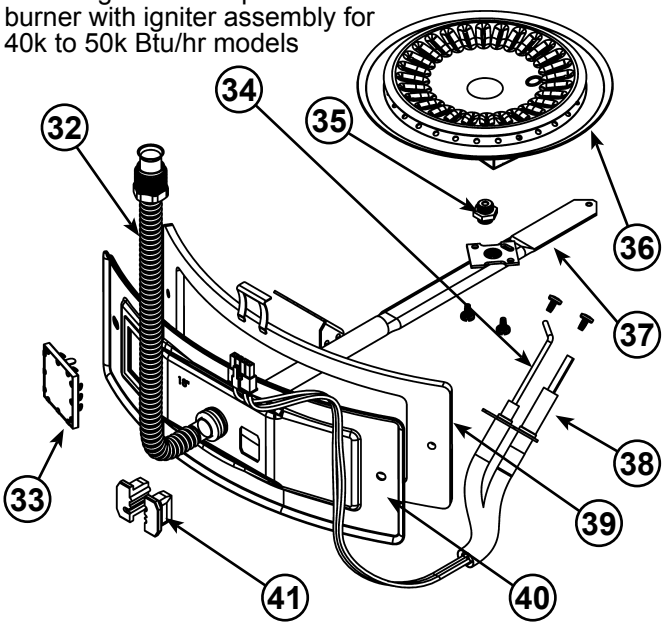

Figure 3.

Natural gas and Propane main burner with igniter assembly for 60k to 75k Btu/hr models

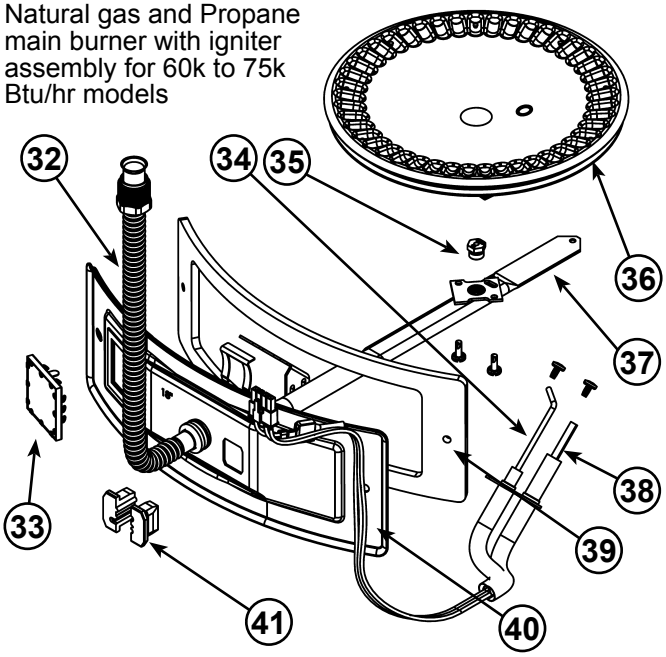

Figure 4.

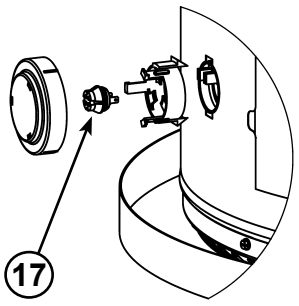

Figure 5.

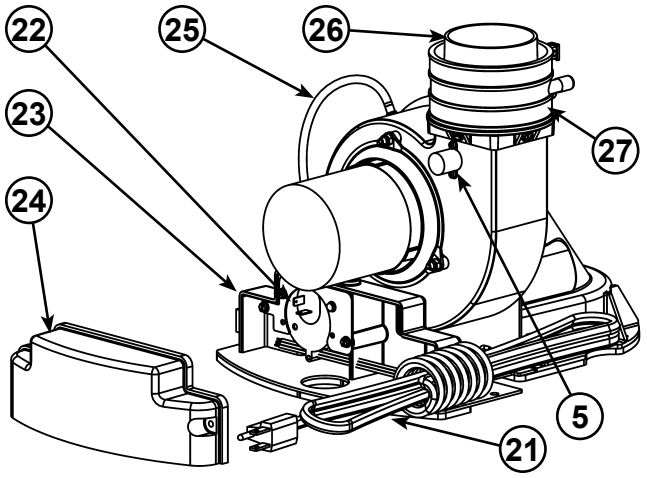

Figure 6.

Vacuum relief valve install per local codes (not supplied with heater).

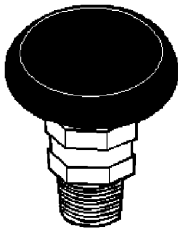

Figure 7.

Notes:

* Items not supplied with the water heater.

** The side recirculation loop connections may not be used as the primary water inlet and outlet connections. See “Combo Heating Inlet And Outlet Side Taps” below.

*** Caution harness has 120 VAC In operation.

**** See “Planning The Vent System”, “Condensate” and “Blower Assembly Installation” for more information.

REPLACEMENT PARTS AND DELIMING PRODUCTS

Replacement parts and recommended delimer may be ordered through authorized servicers or distributors. When ordering parts, provide complete model and serial numbers (see rating plate), quantity and name of part desired. Standard hardware items may be purchased locally.

COMBO HEATING INLET AND OUTLET SIDE TAPS

Models equipped with Combo Heating capabilities are shipped with the two side plumbing taps **OPEN** (items 18 and 20 in Figure 1 and see also Figure 8 & Figure 25). If the heater is to be operated without using the side taps, these openings **must be closed** with the two pipe plugs supplied with the heaters.

WATER PIPING - MIXING VALVE USAGE

Mixing Valves

⚠ DANGER

Water temperature over 125°F can cause severe burns instantly resulting in severe injury or death.

Children, the elderly and the disabled and are at highest risk of scald injury.

Feel water before bathing or showering.

Temperature limiting devices such as mixing must be installed when required by codes and to ensure safe temperatures at fixtures.

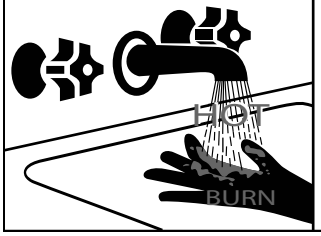

Water heated to a temperature which satisfies space heating, clothes washing, dish washing, and other sanitizing needs can scald and cause permanent injury upon contact. Short repeated heating cycles caused by small hot-water uses can cause a temperature increase of the hot water by 20F° higher than the heater's temperature settings.

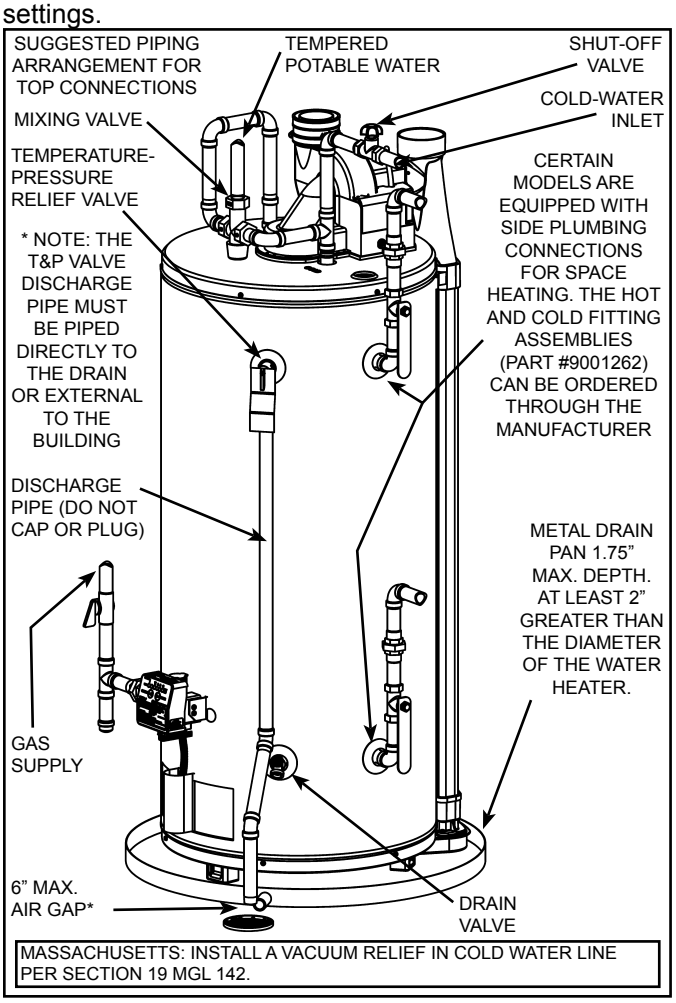

Figure 8.

his appliance has been design certified as complying with American National Standard/CSA Standard for water heaters and certain models with side plumbing connections are considered suitable for Water (Potable) Heating and Space Heating. **Note:** Do not use in space heating only applications.

The water supply pressure should not exceed 80 psi. If this occurs, a pressure reducing valve with a bypass should be installed in the cold water inlet line. This should be placed on the supply to the entire house in order to maintain equal hot and cold water pressures.

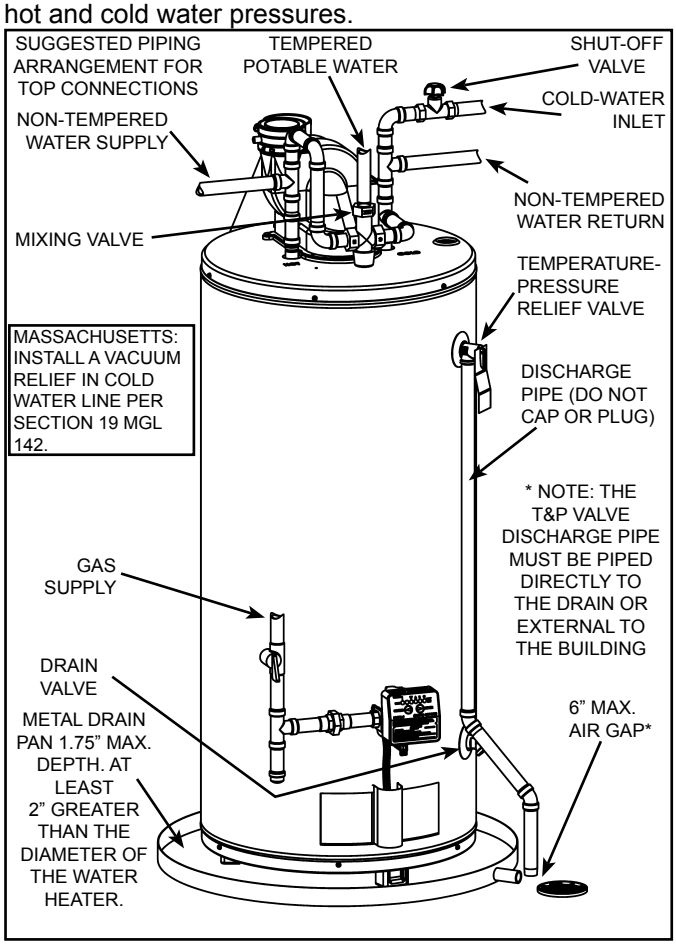

Figure 9.

Some people are more likely to be permanently injured by hot water than others. These include the elderly, children, the infirm and the physically/mentally disabled. Table 1 (published by U.S. Government Memorandum, 1978) shows the approximate time-to-burn relationship for normal adult skin. If anyone using hot water provided by the water heater being installed fits into one of these groups or if there is a local code or state law requiring a certain water temperature at the point of use, then special precautions must be taken.

Water Temperature °F	Time for 1st Degree Burns (Less Severe Burns)	Time for Permanent Burns 2nd & 3rd Degree (Most Severe Burns)
110	(normal shower temp.)	
116	(pain threshold)	
116	35 minutes	45 minutes
122	1 minute	5 minutes
131	5 seconds	25 seconds
140	2 seconds	5 seconds
149	1 second	2 seconds
154	instantaneous	1 seconds
(U.S. Government Memorandum, C.P.S.C., Peter L. Armstrong, Sept. 15,1978)		

Table 1.

In addition to using lowest possible temperature setting that satisfies demand of application, a mixing valve should be installed at water heater (see Figure 8 & Figure 9) or at hot-water taps to further reduce system water temperature. Mixing valves are available at plumbing supply stores. Consult a Qualified Installer or Service Agency. Follow mixing valve manufacturer's instructions for installation of the valves. Before changing the factory setting on the thermostat, read the "Operating The Temperature Control System" section in this manual.

WATER HEATER OPERATION

Figure 10 shows the water heater's sequence of operation when a call for heat is initiated. The ignition control module will attempt to light the burner three times. If the ignition control does not detect ignition it will enter lockout mode and flash the corresponding error code.

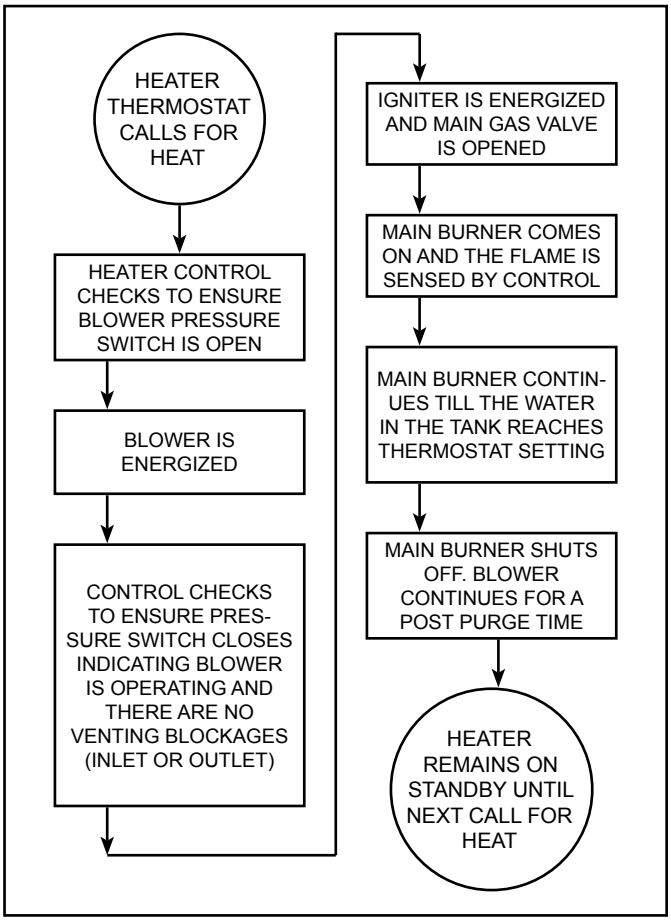

Figure 10.

ELECTRICAL REQUIREMENTS & WIRING DIAGRAM

⚠WARNING

Electric Shock Hazard

Disconnect power before servicing.

Replace all parts and panels before operating.

Failure to do so can result in death or electrical shock.

Before plugging in the water heater, always make sure:

- The voltage and frequency correspond to that specified on the water heater wiring diagram.
- The electrical outlet has the proper overload fuse or breaker protection.

1. The unit must be connected to a dedicated power supply.
2. The unit must be connected to a 120VAC power supply.
3. The water heater must be properly grounded.
4. This water heater is a polarity sensitive appliance and will not operate if the power supply polarity is reversed.

Note: Always reference the wiring diagram for the correct electrical connections.

After making all electrical connections, completely fill the tank with water and check all connections for leaks. Open the nearest hot-water faucet and let it run for 3 minutes to purge the water lines of air and sediment and to ensure complete filling of the tank. The electrical power may then be turned on. Verify proper operation after servicing. See also “Installation Checklist”.

CAUTION

LABEL ALL WIRES PRIOR TO DISCONNECTION WHEN SERVICING CONTROLS. WIRING ERRORS CAN CAUSE IMPROPER AND DANGEROUS OPERATION. VERIFY PROPER OPERATION AFTER SERVICING. POWER VENT WIRING SCHEMATIC.

NOTE: REFER TO THE “INSTALLATION CHECKLIST” BEFORE OPERATING THIS HEATER.

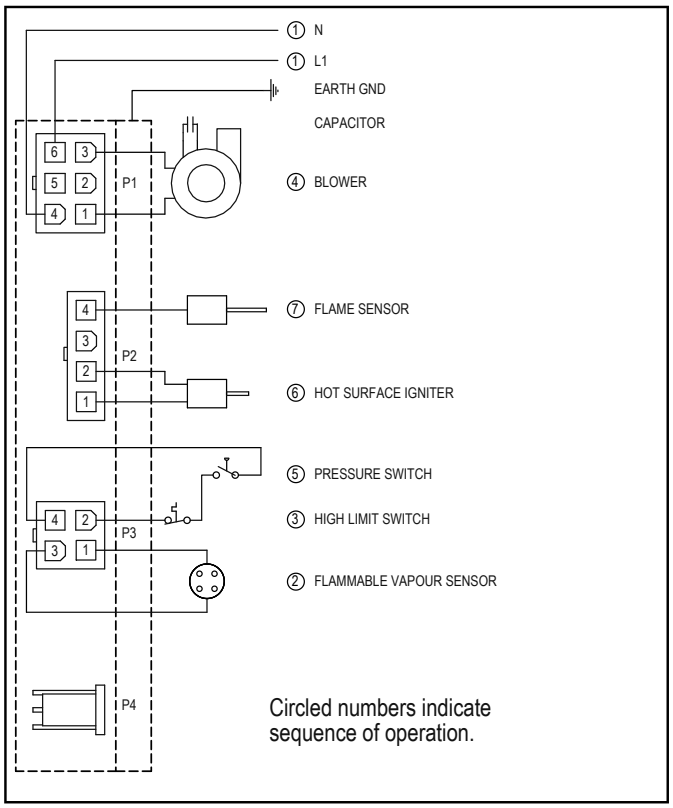

Figure 11.

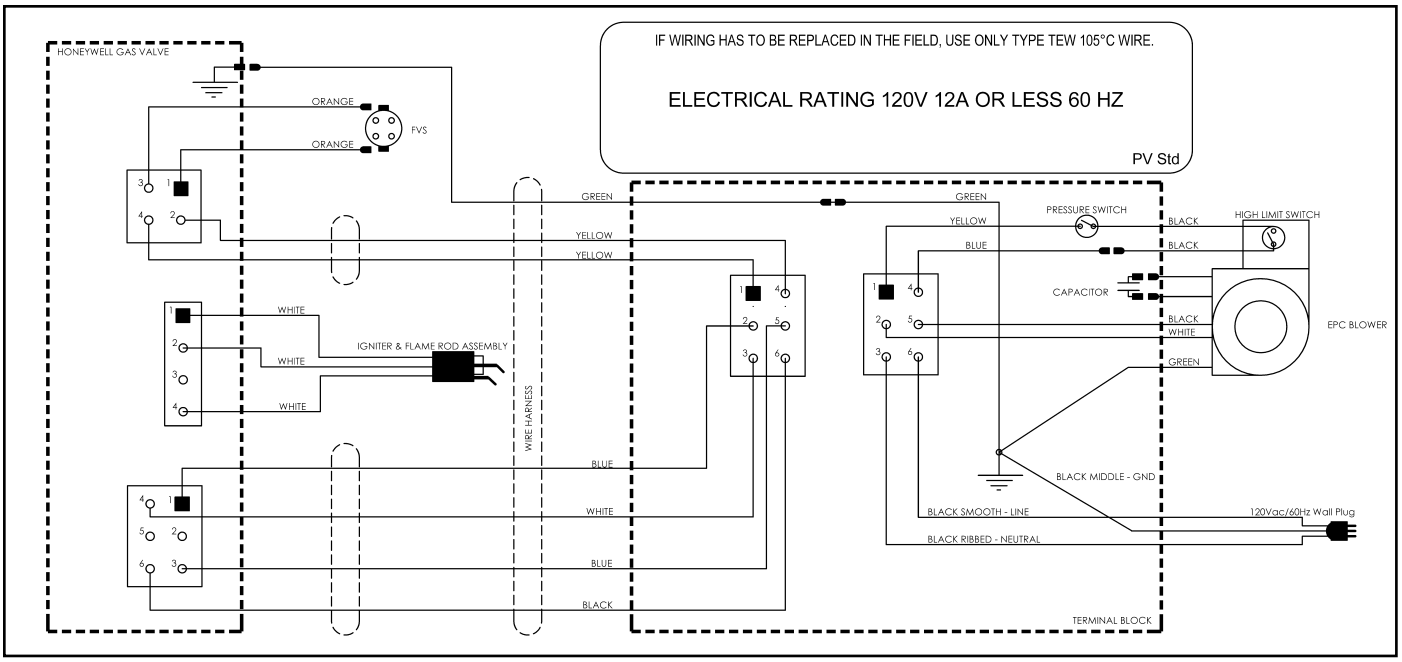

Figure 12.

SAFETY LOCKOUTS

This water heater has several lockout features designed to prevent the heater from operating in unsafe conditions.

HIGH LIMIT CONTROLS (Energy Cut Off)

Thermostat/Water Temperature

This feature is a part of the gas control valve/thermostat (see Figure 1, item 10) and limits the maximum water temperature. In the event of the water overheating, this safety feature shuts off the fuel supply to the burner.

Blower High Limit Switch

This device is located on the blower (see Figure 6, item 5) and limits the maximum temperature of the blower. If the blower temperature rises above the temperature setting, the switch opens causing the heater to shut down. The switch will auto reset once the temperature drops sufficiently.

BLOWER AIR PRESSURE SWITCH

This device, located in the junction box, monitors the air pressure produced by the blower. In the event that the exhaust venting becomes blocked or sufficiently restricted, the switch will shut the heater down (see Figure 6, item 22).

FLAMMABLE VAPOR SENSOR

When using a gas fired water heater there is a risk of flammable vapors entering the combustion chamber, being ignited by the burner flame and causing a flashback. In order to detect such flammable vapors before they enter the combustion chamber, this water heater is equipped with a flammable vapor sensor (FVS). It is a chemical-absorption based sensor that is connected to the gas control/thermostat (see Figure 13). When exposed to flammable vapors it will trigger the control to stop the flow of gas and enter the FVS lockout state. While in the FVS lockout state the LED on the control will flash the gas lockout code. (Refer to the “System Status And Error Codes” section of this manual for an explanation of the codes applicable to the control installed on your water heater.) If this error occurs, check around the water heater for sources of chemical contamination such as: flammable vapors including gas vapors, solvents, paint and thinners as well as sources of water and detergents.

Note: Resetting the heater will reset the FVIR circuit if all sources of contamination have been removed and the sensor clears. If all sources of contamination have been removed and the system will not reset, the sensor will need to be replaced (see “Resetting the Heater Control”).

If there is a problem with the wiring of the flammable vapor sensor or the flammable vapor interface, the LED will flash the failure status code (see “System Status And Error Codes”).

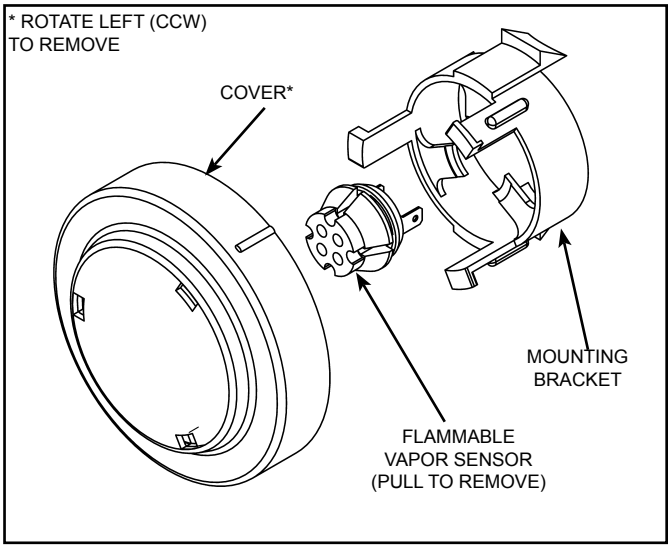

Figure 13.

LOCATING THE NEW WATER HEATER

FACTS TO CONSIDER ABOUT THE LOCATION

Carefully choose an indoor location for the new water heater because the placement is a very important consideration for the safety of the occupants in the building and for the most economical use of the appliance. This water heater is not for use in manufactured (mobile) homes or outdoor installation.

Whether replacing an old water heater or putting the water heater in a new location, the following critical points must be observed:

1. Select a location indoors as close as practical to the vent termination or location to which the water heater vent piping is going to be connected, and as centralized with the water piping system as possible.
2. Selected location must provide adequate clearances for servicing and proper operation of the water heater.
3. Ensure the area has a continuous supply of air for combustion, dilution and ventilation.
4. Avoid locations that could cause the water heater to freeze from outside air.
5. Selected location must provide access to a properly grounded electrical branch circuit. A dedicated circuit is preferred. Do not use a GFI outlet.
6. Avoid locations that expose the water heater to direct sunlight.
7. Keep combustibles such as boxes, magazines, clothes, etc., away from the water heater area.

Important: Do not use an extension cord to connect the water heater to an electrical outlet.

Important: this heater has special venting requirements when installed in areas where the ambient temperatures exceed 110°F (see "High Ambient Temperature Installations").

CAUTION

Property Damage Hazard

- All water heaters eventually leak.
- Do not install without adequate drainage.

Installation of the water heater must be accomplished in such a manner that if the tank or any connections should leak, the flow of water will not cause damage to the structure. For this reason it is not advisable to install the water heater in an attic or upper floor. In all cases, a metal drain pan should be installed under the water heater. Metal drain pans are available at your local hardware store. Such a metal drain pan must have a clearance of at least 1" greater than any point on the water heater's outer jacket and must be piped to an adequate drain. The pan must have a maximum depth of 1.75".

Water heater life depends upon water quality, water pressure and the environment in which the water heater is installed. Water heaters are sometimes installed in locations where leakage may result in property damage, even with the use of a metal drain pan piped to a drain. However, unanticipated damage can be reduced or prevented by a leak detector or water shut-off device used in conjunction with a piped metal drain pan. These devices are available from some plumbing supply wholesalers and retailers, and detect and react to leakage in various ways:

- Sensors mounted in the metal drain pan that trigger an alarm or turn off the incoming water to the water heater when leakage is detected.
- Sensors mounted in the metal drain pan that turn off the water supply to the entire building when water is detected in the metal drain pan.
- Water supply shut-off devices that activate based on the water pressure differential between the cold-water and hot-water pipes connected to the water heater.
- Devices that will turn off the gas supply to a gas water heater while at the same time shutting off its water supply.

STORAGE OF FLAMMABLE LIQUIDS

Flammable liquids (such as gasoline, solvents, propane (LP or butane, etc.) and other substances (such as adhesives, paints, etc.) emit flammable vapors which can be ignited by a gas water heater's hot surface igniter (HSI) or main burner. The resulting flashback and fire can cause death or serious burns to anyone in the area.

This water heater is equipped with a FV (Flammable Vapor) sensor for detecting the presence of flammable vapors. When the sensor detects those vapors, the unit will shut down and not operate. Should this happen, please refer to the "Troubleshooting Guidelines" section of this manual. Even though this water heater is a flammable vapors ignition resistant (FVIR) water heater and is designed to reduce the chances of flammable vapors being ignited, gasoline and other flammable substances should never be stored or used in the same vicinity or area containing a gas water heater or other open flame or spark producing appliance. Examples of such locations are garages, storage and utility areas.

The water heater must be located and/or protected so it is not subject to physical damage by a moving vehicle.

⚠ WARNING

Fire or Explosion Hazard

- Do not store or use gasoline or other flammable vapors and liquids in the vicinity of this or any other appliance.
- Avoid all ignition sources if you smell gas.
- Do not expose water heater control to excessive gas pressure.
- Use only gas shown on rating plate.
- Maintain required clearances to combustibles.
- Keep ignition sources away from faucets after extended period of non-use.

Read instruction manual before installing, using or servicing water heater.

⚠ WARNING

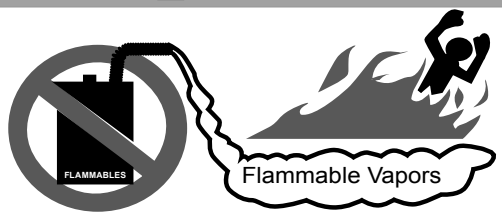

FIRE AND EXPLOSION HAZARD
Can result in serious injury or death

Do not store or use gasoline or other flammable vapors and liquids in the vicinity of this or any other appliance. Storage or use of gasoline or other flammable vapors or liquids in the vicinity of this or any other appliance can result in serious injury or death.



⚠ WARNING

Fire Hazard

For continued protection against risk of fire:

- Do not install water heater on carpeted floor.
- Do not operate water heater if flood damaged.

Clearances to combustibles

Minimum clearances between water heater and combustibles are 0” at the sides and rear, 5.5” from the front and 12” from top (standard clearance.) If clearances stated on the heater differ from standard clearances, install water heater according to clearances stated on the heater (see Figure 14).

Floors with carpeting

This water heater must not be installed directly on carpeting. Carpeting must be protected by a metal or wood panel beneath the appliance extending beyond the full width and depth of the appliance by at least 3” in every direction, or if the appliance is installed in an alcove or closet, the entire floor must be covered by the panel. Failure to heed this warning may result in a fire hazard.

Clearance for servicing

Adequate clearance of 24” for servicing this appliance should be considered before installation, such as changing the anodes, etc.

A minimum clearance of 5.5” must be allowed for access to replaceable parts such as thermostats, drain valve and relief valve.

When installing the heater, consideration must be given to proper location. Location selected should be as close to the wall as practicable and as centralized with the water piping system as possible.

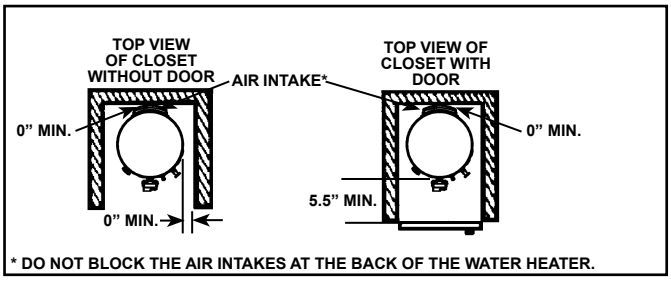

Figure 14.

A gas water heater cannot operate properly without the correct amount of air for combustion and ventilation. Do not install in a confined area such as a closet unless you provide air as shown below and described in the “Air Requirements” section (see Figure 15). Never obstruct the flow of ventilation air for dilution and combustion. If you have any doubts or questions at all, call your gas supplier. Failure to provide the proper amount of combustion air can result in a fire or explosion and cause death, serious bodily injury, or property damage.

⚠ WARNING

Breathing Hazard - Carbon Monoxide Gas

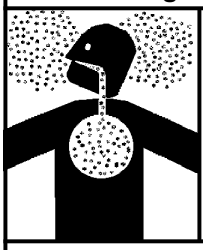

- **Install water heater in accordance with the instruction manual and NFPA54.**
- **To avoid injury, combustion and ventilation air must be taken from outdoors.**
- **Do not place chemical vapor emitting products near water heater.**

Breathing carbon monoxide can cause brain damage or death. Always read and understand instruction manual.

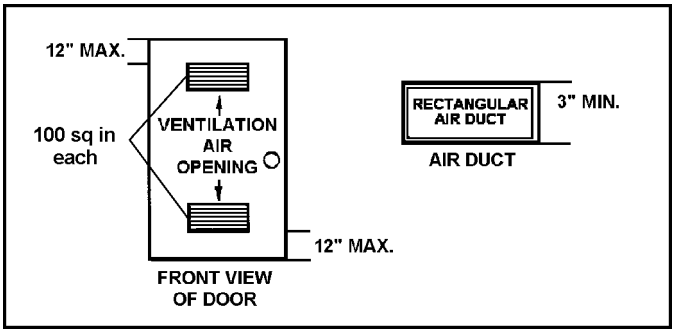

Figure 15.

If this water heater will be used in beauty shops, barber shops, cleaning establishments, or self-service laundries with dry cleaning equipment, it is imperative that the water heater or water heaters be installed so that combustion and ventilation air be taken from outside these areas.
Propellants of aerosol sprays and volatile compounds, (cleaners, chlorine based chemicals, refrigerants, etc.) in addition to being highly flammable in many cases, will also react to form corrosive hydrochloric acid when exposed to the combustion products of the water heater. The results can be hazardous, and also cause product failure.

INSULATION BLANKETS

Insulation blankets are available to the general public for external use on gas water heaters but are not necessary with these products. The purpose of an insulation blanket is to reduce standby heat loss encountered with storage tank heaters. Your water heater meets or exceeds the current standards with respect to insulation and standby loss requirements, making an insulation blanket unnecessary. Should you choose to apply an insulation blanket to this heater, you should follow these instructions (For identification of components mentioned below, see Figure 1 thru Figure 7). Failure to follow these instructions will restrict the air flow required for proper combustion and dilution, potentially resulting in fire, asphyxiation, serious personal injury or death.

- Do not apply insulation to the top of the water heater, as this will interfere with safe operation of the blower assembly.
- Do not cover the outer door, thermostat or T&P relief valve, FV sensor, or Air Intake Snorkel.
- Do not cover the “Installation And Operating manual”. Keep it on the side of the water heater or nearby for future reference.
- Do obtain new warning and instruction labels from the manufacturer for placement on the blanket directly over the existing labels.
- Do inspect the insulation blanket frequently to make certain it does not sag, thereby obstructing combustion air flow.

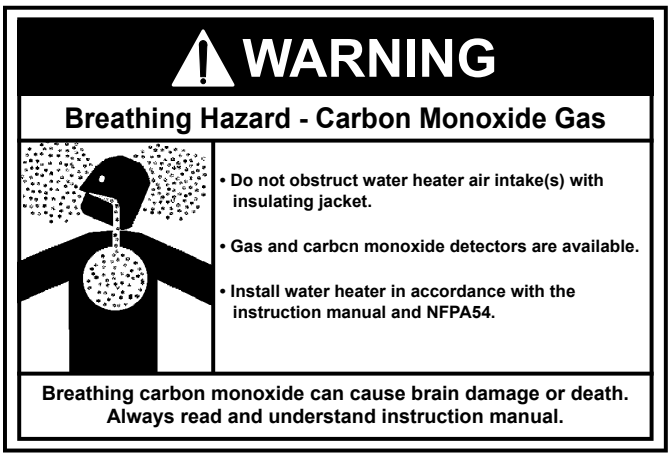

AIR REQUIREMENTS

For safe operation an adequate supply of fresh, uncontaminated air for combustion, dilution and ventilation must be provided.
Note: Contaminated or dusty air may cause build-up on the blower wheel resulting in nuisance shut downs.

An insufficient supply of air can cause recirculation of combustion products resulting in contamination that may be hazardous to life. Such a condition often will result in a yellow, luminous burner flame, causing sooting of the combustion chamber, burners and flue tubes and creates a risk of asphyxiation.

Do not install the water heater in a confined space unless an adequate supply of air for combustion, dilution and ventilation is brought into that space using the methods described in the “Confined Space” section that follows.

Never obstruct the flow of dilution/ventilation air. If you have any doubts or questions at all, call your gas supplier. Failure to provide the proper amounts of air can result in a fire or explosion and cause property damage, serious bodily injury or death. The combustion and dilution air inlets are shown in Figure 2.
Important: Power Vented water heaters require air for combustion and dilution air for the blower.

UNCONFINED SPACE

An Unconfined Space is one whose volume is not less than 50 cubic feet per 1,000 Btu/hr of the total input rating of all appliances installed in the space. Rooms communicating directly with the space in which the appliances are installed, through openings not furnished with doors, are considered a part of the unconfined space.

Makeup air requirements for the operation of exhaust fans, kitchen ventilation systems, clothes dryers and fireplaces should also be considered in determining the adequacy of a space to provide combustion, ventilation and dilution air.

UNUSUALLY TIGHT CONSTRUCTION

In unconfined spaces in buildings, infiltration may be adequate to provide air for combustion, ventilation and dilution of flue gases. However, in buildings of unusually tight construction (e.g., weather stripping, heavily insulated, caulked, vapor barrier, etc.) additional air must be provided using the methods described in the “Confined Space” section that follows.

CONFINED SPACE

A Confined Space is one whose volume is less than 50 cubic feet per 1,000 Btu/hr of the total input rating of all appliances installed in the space.
Openings must be installed to provide fresh air for combustion, ventilation and dilution in confined spaces. The required size for the openings is dependent on the method used to provide fresh air to the confined space

and the total Btu/hr input rating of all appliances installed in the space.

DIRECT VENT APPLIANCES

Other appliances installed in a Direct Vent configuration that derive all air for combustion from the outdoor atmosphere through sealed intake air piping are not factored in the total appliance input Btu/hr calculations used to determine the size of openings providing fresh air into confined spaces.

EXHAUST FANS

Where exhaust fans are installed, additional air should be provided to replace the exhausted air. When an exhaust fan is installed in the same space with a water heater, sufficient openings to provide fresh air must be provided that accommodate the requirements for all appliances in the room and the exhaust fan. Undersized openings will cause air to be drawn into the room through the water heater's vent system causing poor combustion. Sooting, serious damage to the water heater and the risk of fire or explosion may result. It can also create a risk of asphyxiation.

FRESH AIR OPENINGS FOR CONFINED SPACES

The following instructions should be used to calculate the size, number and placement of openings providing fresh air for combustion, ventilation and dilution in confined spaces. The illustrations shown in this section of the manual are a reference for the openings that provide fresh air into confined spaces only. Do not refer to these illustrations for the purpose of vent installation. See "Installation of Vent System" section for complete venting installation instructions.

Chemical vapor corrosion of the flue, blower assembly and vent system may occur if the air supply contains certain chemical vapors. Spray can propellants, cleaning solvents, refrigerator and air conditioner refrigerants, swimming pool chemicals, calcium and sodium chloride (water softener salt), waxes, bleach and process chemicals are typical compounds which are potentially corrosive.

A. ALL AIR FROM INSIDE BUILDINGS: (See Figure 16)
The confined space shall be provided with two permanent openings communicating directly with an additional room(s) of sufficient volume so that the combined volume of all spaces meets the criteria for an unconfined space. The total input of all gas utilization equipment installed in the combined space shall be considered in making this determination. Each opening shall have a minimum free area of one square inch per 1,000 Btu/hr of the total input rating of all gas utilization equipment in the confined space, but not less than 100 square inches. One opening shall commence within 12" of the top and one commencing within 12" of the bottom of the enclosures.

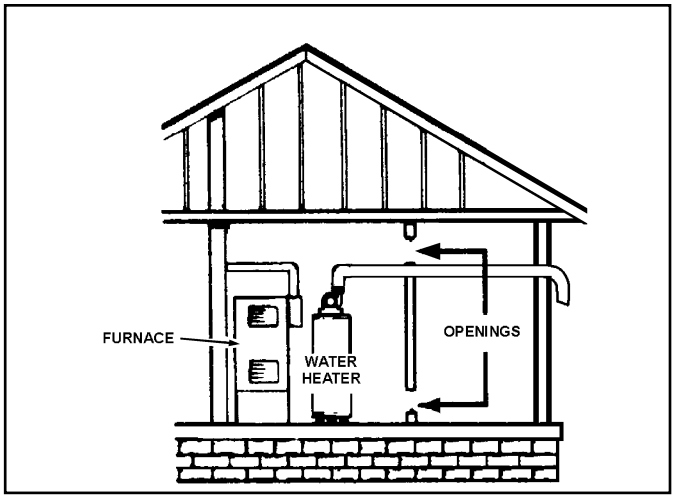

Figure 16.

B. ALL AIR FROM OUTDOORS: (See Figure 17 thru Figure 19)
The confined space shall be provided with two permanent openings, one commencing within 12" of the top and one commencing within 12" from the bottom of the enclosure. The openings shall communicate directly, or by ducts, with the outdoors or spaces (crawl or attic) that freely communicate with the outdoors.

1. When directly communicating with the outdoors, each opening shall have a minimum free area of 1 square inch per 4,000 Btu/hr of total input rating of all equipment in the enclosure (see Figure 17).

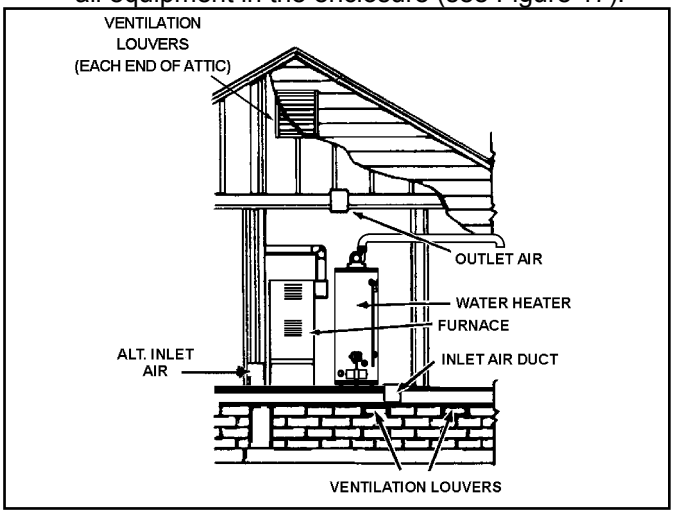

Figure 17.

2. When communicating with the outdoors through vertical ducts, each opening shall have a minimum free area of 1 square inch per 4,000 Btu/hr of total input rating of all equipment in the enclosure (see Figure 18).
3. When communicating with the outdoors through horizontal ducts, each opening shall have a minimum free area of 1 square inch per 2,000 Btu/hr of total input rating of all equipment in the enclosure (see Figure 19).

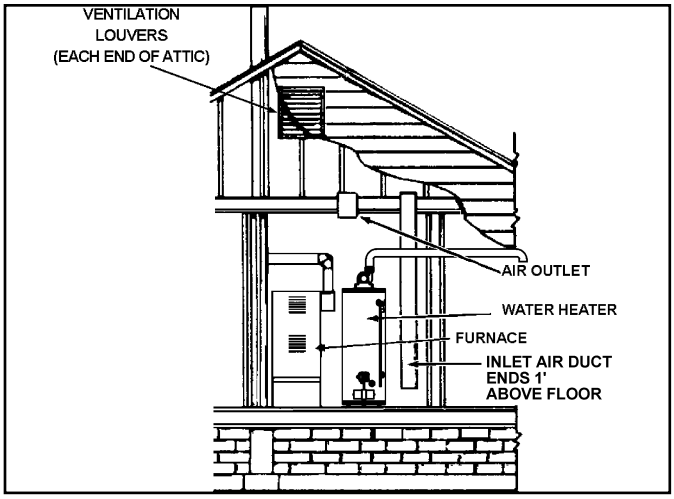

Figure 18.

4. When ducts are used, they shall be of the same cross-sectional area as the free area of the openings to which they connect. The minimum short side dimension of rectangular air ducts shall not be less than 3" (see Figure 19).

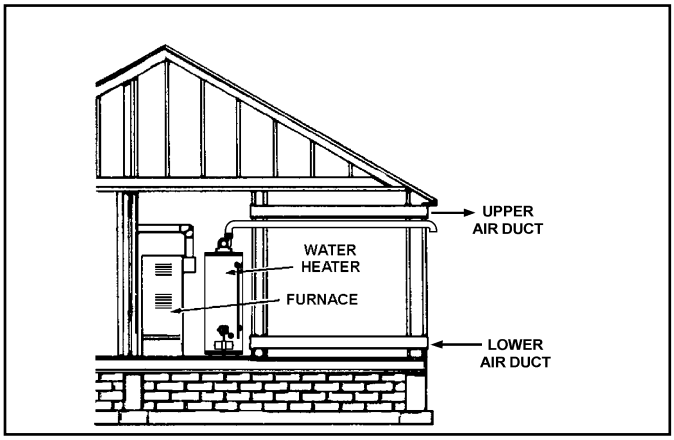

Figure 19.

5. Alternatively a single permanent opening may be used when communicating directly with the outdoors, or with spaces that freely communicate with the outdoors. The opening shall have a minimum free area of 1 square inch per 3,000 Btu/hr of total input rating of all equipment in enclosure (see Figure 20).

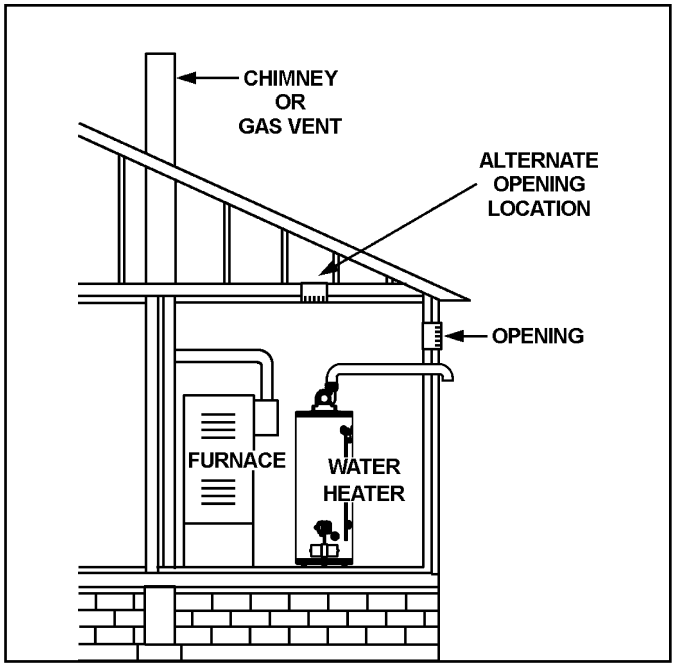

Figure 20.

6. Louvers and Grilles: In calculating free area, consideration shall be given to the blocking effect of louvers, grilles or screens protecting openings. Screens used shall not be smaller than 1/4" mesh. If the free area through a design of louver or grille is known, it should be used in calculating the size opening required to provide the free area specified. If the design and free area is not known, it may be assumed that wood louvers will be 20-25 percent free area and metal louvers and grilles will have 60-75 percent free area. Louvers and grilles shall be fixed in the open position or interlocked with the equipment so that they are opened automatically during equipment operation.
7. Special Conditions Created by Mechanical Exhausting or Fireplaces: operation of exhaust fans, ventilation systems, clothes dryers or fireplaces may create conditions requiring special attention to avoid unsatisfactory operation of installed gas utilization equipment.

CHEMICAL VAPOR CORROSION

CORROSION OF THE FLUEWAYS AND VENT SYSTEM MAY OCCUR IF AIR FOR COMBUSTION CONTAINS CERTAIN CHEMICAL VAPORS. SUCH CORROSION MAY RESULT IN FAILURE AND RISK OF ASPHYXIATION. Spray can propellants, cleaning solvents, refrigerator and air conditioning refrigerants, swimming pool chemicals, calcium and sodium chloride (water softener salt), waxes, and process chemicals are typical compounds which are potentially corrosive. Do not store products of this sort near the heater. Also air which is brought in contact with the heater should not contain any of the chemicals. If necessary, uncontaminated air should be obtained from remote or outside sources. The Limited Warranty is voided when failure of water heater is due to a corrosive atmosphere. See "Limited Warranty" for complete terms and conditions.

INSTALLING THE NEW WATER HEATER

WATER PIPING

⚠ DANGER

Water temperature over 125°F can cause severe burns instantly resulting in severe injury or death.

Children, the elderly and the disabled and are at highest risk of scald injury.

Feel water before bathing or showering.

Temperature limiting devices such as mixing must be installed when required by codes and to ensure safe temperatures at fixtures.

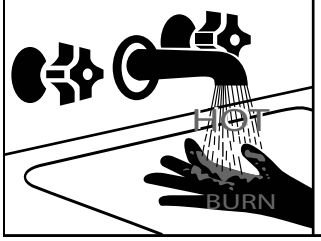

The water supply pressure should not exceed 80 psi. If this occurs, a pressure reducing valve with a bypass should be installed in the cold water inlet line. This should be placed on the supply to the entire house in order to maintain equal hot and cold water pressures.

HOT WATER CAN SCALD:
Water heaters are intended to produce hot water. Water heated to a temperature which will satisfy space heating, clothes washing, dish washing, cleaning and other sanitizing needs can scald and permanently injure you upon contact. Some people are more likely to be permanently injured by hot water than others. These include the elderly, children, the infirm, or physically/ mentally handicapped. If anyone using hot water fits into one of these groups or if there is a local code or state law requiring certain temperature water at the hot-water tap, then you must take special precautions. In addition to using lowest possible temperature setting that satisfies your hot water needs, a means such as a mixing valve, should be used at hot-water taps used by these people or at the water heater (see Figure 8 & Figure 9). Valves for reducing point of use temperature by mixing cold and hot water are also available.

SPACE HEATING AND POTABLE WATER SYSTEMS

This appliance has been design certified as complying with American National Standard/CSA Standard for water heaters and are considered suitable for Water (Potable) Heating and Space Heating. **Note:** Water heaters used in combination water/space heating shall not be used in space heating only applications.

⚠ WARNING

Toxic Chemical Hazard

- Do not connect to non-potable water system.

Consult a Qualified Installer or Service Agency. Follow manufacturer's instructions for installation of valves. Before changing the factory setting on thermostat, read "Operating The Temperature Control System" section in this manual.

- This water heater should not be connected to any heating systems or components previously used with a non-potable water heating appliance.
- All piping components connected to this unit for space heating applications should be suitable for use with potable water.
- Toxic chemicals, such as those used for boiler treatment shall not be introduced into the potable water used for space heating.
- When the system requires water for space heating at temperatures higher than required for domestic water purposes, a mixing valve must be installed. Please refer to Figure 8 & Figure 9 for suggested piping arrangement.

Note: Water piping and vent piping occupy the space above the water heater. Plan the water piping to ensure it does not cause interference with the vent piping (see "Planning the Vent System").

If this water heater is to be used to supply both space heating and potable water, the instructions listed below must be followed:

- Be sure to follow the manual(s) shipped with the air handler or other type heating system.
- This water heater is not to be used as a replacement for an existing boiler installation.
- Do not use with piping that has been treated with chromates, boiler seal or other chemicals and do not add any chemicals to the water heater piping.
- If the space heating system requires water temperatures in excess of 120°F, a mixing valve must be installed, per the manufacturer's instructions, in the potable hot-water supply to limit the risk of scald injury.
- Pumps, valves, piping and fittings must be compatible with potable water.
- A properly installed flow control valve is required to prevent thermosiphoning. Thermosiphoning is the result of a continuous flow of water through the air handler circuit during the off cycle. Weeping (blow off) of the temperature-pressure relief valve (T&P) or higher than normal water temperatures are the first signs of thermosiphoning.
- The hot-water line from the water heater should be vertical past any mixing valve or supply line to the heating system to remove air bubbles from the system.
- Do not connect the water heater to any system or components previously used with non-potable water heating appliances when used to supply potable water.

COMBO HEATING

This section serves as a guide for the installation and use of "Combo" heating systems utilizing a domestic water heater that has been specifically approved for such use. It is written for those knowledgeable in the required trades and professionals involved in the design and installation of Combo Heating Systems.

It is the responsibility of the installer/designer to follow all applicable codes to ensure the effectiveness and safety of the installation.

System Requirements

The following requirements must be met for the installation of Combo Heating Systems:

1. All components used for the distribution of water in the heating loop must be suitable for potable water. These include all piping, fittings, solder and fluxes, pumps for circulation of water, valves, etc.
2. The water heater must not be connected to a hydronic heating system that has been used previously.
3. No boiler treatment chemicals of any kind shall be introduced into the system.
4. The Combo System components must be selected and sized to meet and maintain the total calculated demands for both domestic service hot water and space heating requirement. The sizing and installation must be performed in accordance with good engineering practice such as **"ASHRAE Handbooks", HRAI's Unified Combo Guidelines, "Hydronics Institute Manuals", ANSI Z223.1, CSA F280, National/Provincial Building Codes**, ANSI and/or codes having jurisdiction.
5. The air handler (fan coil) and/or the circulating pump in a baseboard hydronic loop will require a dedicated 120V circuit. This must be provided and identified for this purpose.
6. All piping between the water heater and the air handler or hydronic baseboard loop must be adequately insulated to reduce heat loss.
7. If the local jurisdiction requires a back-flow preventer in the cold water line, an expansion tank of adequate size must be installed.
8. "Combo" Heating Systems require higher water temperatures than other applications. When the system is used to supply water for Combo Heating applications, a means, such as mixing valve, must be installed to temper the water in order to reduce scald hazard potential (see Figure 21 & Figure 22).

Installation

The heating mode may be one of the following options:

A. A fan coil/air handler (Figure 21).
B. A hydronic baseboard (finned tube) loop/In floor heating (Figure 22).

The following is a list of requirements for the installation of option A or B.

1. Install shut-off valves and unions so that the water heater can be isolated from the heating module should servicing of the water heater become necessary.
2. Install a drain valve at the lowest point of the heating loop so that water can be drained from the heating module without affecting the water heater.
3. If the air handler does not have a venting means at the highest point of the piping arrangement, install an air bleed at the highest point of the plumbing arrangement.

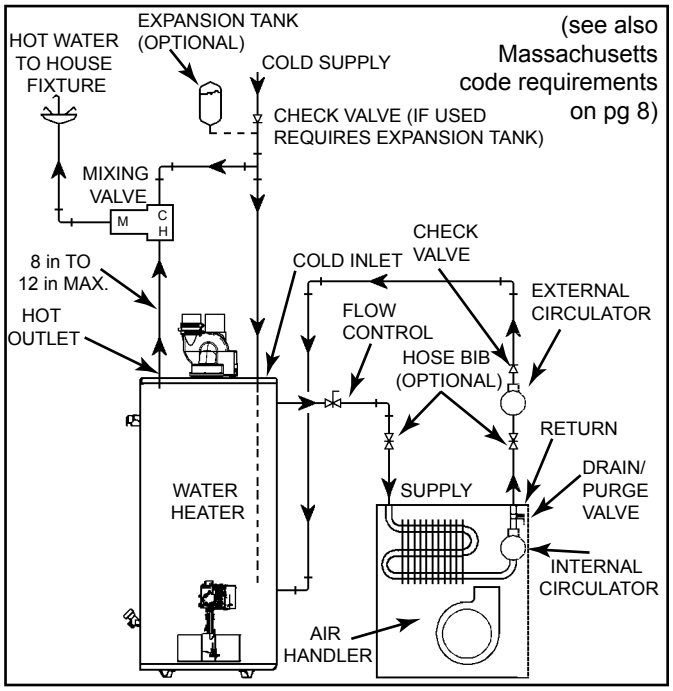

Figure 21.

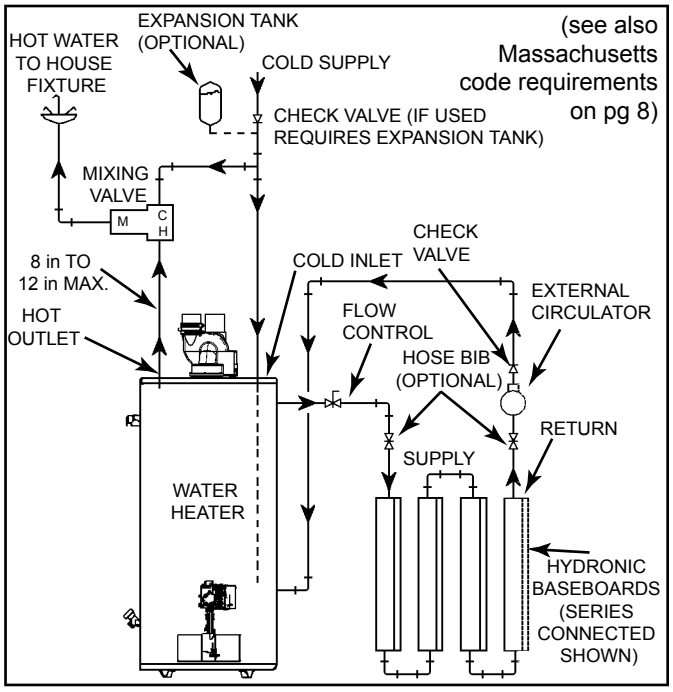

Figure 22.

CLOSED WATER SYSTEMS

Water supply systems may, because of code requirements or such conditions as high line pressure, among others, have installed devices such as pressure-reducing valves, check valves, and back flow preventers. Devices such as these cause the water system to be a closed system.

THERMAL EXPANSION

As water is heated, it expands (thermal expansion). In a closed system, the volume of water will increase. As the volume of water increases, there will be a corresponding increase in water pressure due to thermal expansion. Thermal expansion can cause premature tank failure (leakage). This type of failure is not covered under the limited warranty. Thermal expansion can also cause intermittent temperature-pressure relief valve operation: water discharged from the valve due to excessive pressure build up. The temperature-pressure relief valve is not intended for the constant relief of thermal expansion. This condition is not covered under the limited warranty.

A properly-sized thermal expansion tank should be installed on all closed systems to control the harmful effects of thermal expansion. Contact a plumbing service agency or your retail supplier regarding the installation of a thermal expansion tank.

Note: To protect against untimely corrosion of hot and cold water fittings, it is recommended that di-electric unions or couplings be installed on this water heater when connected to copper pipe.

CAUTION

Property Damage Hazard

- Avoid water heater damage.
- Install thermal expansion tank if necessary.
- Do not apply heat to cold water inlet.
- Contact qualified installer or service agency.

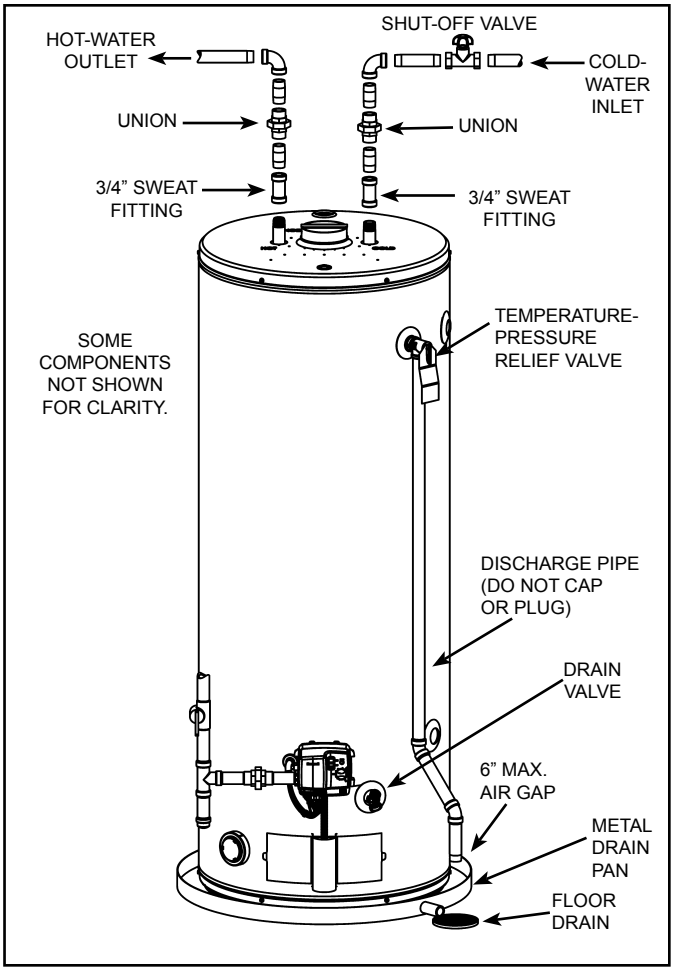

Figure 23.

Figure 21 shows typical attachment of water piping to the water heater. The water heater is equipped with 3/4" NPT water connections.

Note: If using copper tubing, solder tubing to an adapter before attaching the adapter to the water heater connections. Do not solder the water lines directly to the water heater connections - it will harm the dip tube and heat traps and damage the tank.

TEMPERATURE-PRESSURE RELIEF VALVE

⚠ WARNING

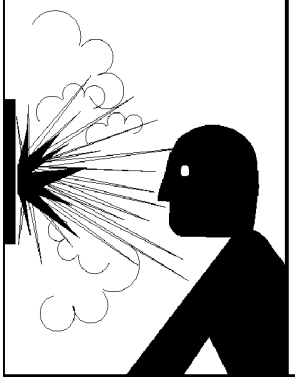

Explosion Hazard

- Temperature-pressure relief valve must comply with ANSI Z21.22-CSA4.4 and ASME code.
- Properly sized temperature-pressure relief valve must be installed in opening provided.
- Do not plug, block, or cap the discharge line.
- Failure to follow this warning can result in excessive tank pressure, serious injury or death.

This water heater is provided with a properly rated/sized and certified combination Temperature-Pressure Relief Valve (T&P valve) by the manufacturer. The valve is certified by a nationally recognized testing laboratory that maintains periodic inspection of production of listed equipment of materials as meeting the requirements for **Relief Valves for Hot Water Supply Systems, ANSI Z21.22-CSA 4.4**, and the code requirements of ASME.

If replaced, the new T&P valve must meet the requirements of local codes, but not less than a combination temperature-pressure relief valve rated/sized and certified as indicated in the above paragraph. The new valve must be marked with a maximum set pressure not to exceed the marked hydrostatic working pressure of the water heater (150 psi) and a discharge capacity not less than the water heater Btu/hr input rate as shown on the water heater's model rating plate.

For safe operation of the water heater, the temperature-pressure relief valve must not be removed from its designated opening nor plugged. The T&P valve must be installed directly into the fitting of the water heater designed for the relief valve. Install discharge piping so that any discharge will exit the pipe within 6" above an adequate floor drain, or external to the building. In cold climates it is recommended that it be terminated at an adequate drain inside the building. Be certain that no contact is made with any live electrical part.

The discharge opening must not be blocked or reduced in size under any circumstances. Excessive length (over 30 feet), or use of more than four elbows can cause restriction and reduce the discharge capacity of the valve.

No valve or other obstruction is to be placed between the T&P valve and the tank. Do not connect discharge piping directly to the drain unless a maximum of 6" air gap is provided. To prevent bodily injury, hazard to life, or property damage, the relief valve must be allowed to discharge water in adequate quantities should circumstances demand. If the discharge pipe is not connected to a drain or other suitable means, the water flow may cause property damage.

CAUTION

Water Damage Hazard

- Temperature-pressure relief valve discharge pipe must terminate at an adequate drain.

T&P valve discharge pipe requirements:

- Shall not be smaller in size than the outlet pipe size of the valve, or have any reducing couplings or other restrictions.
- Shall not be plugged or blocked.
- Shall not be exposed to freezing temperatures.
- Shall be of material listed for hot water distribution.
- Shall be installed so as to allow complete drainage of both the temperature-pressure relief valve and the discharge pipe.
- Must terminate a maximum of six inches above a floor drain or external to the building. In cold climates, it is recommended that the discharge pipe be terminated at an adequate drain inside the building
- Shall not have any valve or other obstruction between the relief valve and the drain.

⚠ DANGER

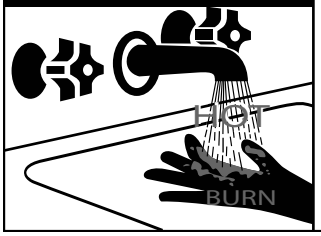

- Burn hazard.
- Hot water discharge.
- Keep clear of temperature-pressure relief valve discharge.

The T&P valve must be manually operated at least once a year. Caution should be taken to ensure (1) no one is in front of or around the outlet of the discharge line, and (2) the water manually discharged will not cause any bodily injury or property damage because the water may be extremely hot. If after manually operating the valve, it fails to completely reset and continues to release water, immediately close the cold-water inlet to the water heater, follow the draining instructions in this manual, and replace the temperature-pressure relief valve with a properly rated/sized new one.

Note: The purpose of a temperature-pressure relief valve is to prevent excessive temperatures and pressures in the storage tank. The T&P valve is not intended for the constant relief of thermal expansion. A properly sized thermal expansion tank must be installed on all closed systems to control thermal expansion, see “Closed Water Systems” and “Thermal Expansion” section.

Temperature-Pressure Relief Valve and Pipe Insulation

The T&P valve installed on this water heater is covered by insulation to minimize heat loss. The insulation has a hole on the bottom side to accommodate the valve outlet and allow for the piping connection. Do not restrict the outlet opening of the T&P valve.

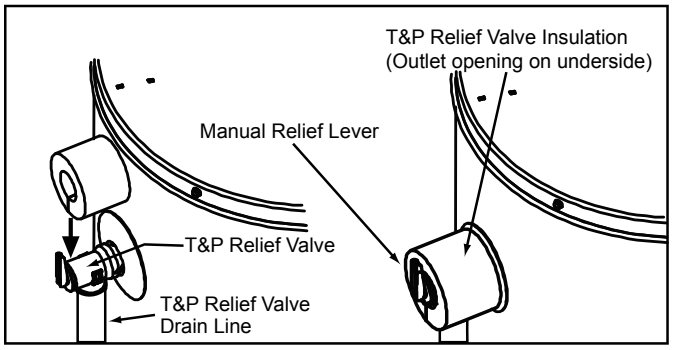

Figure 24.

Locate the temperature and pressure relief valve on the water heater (also known as a T&P relief valve). See Figure 24.

1. Locate the slit running the length of the T&P relief valve insulation.
2. Spread the slit open and fit the insulation over the T&P relief valve. See Figure 24. Apply gentle pressure to the insulation to ensure that it is fully seated on the T&P Relief Valve. Once seated, secure the insulation with duct tape, electrical tape, or equivalent. IMPORTANT: The insulation and tape must not block the discharge opening or hinder access to the manual relief lever (Figure 24). Ensure a discharge pipe is installed into the T&P valve discharge opening per the instructions in this manual.
3. Locate the hot water (outlet) & cold water (inlet) pipes to the water heater.
4. Locate the slit running the length of a section of pipe insulation.
5. Spread the slit open and slip the insulation over the cold water (inlet) pipe. Apply gentle pressure along the length of the insulation to ensure that it is fully seated around the pipe. Also, ensure that the base of the insulation is flush with the water heater. Once seated, secure the insulation with duct tape, electrical tape, or equivalent.
6. Repeat steps 5 and 6 for the hot water (outlet) pipe.
7. Add additional sections of pipe insulation as needed.

HIGH ALTITUDE INSTALLATION

⚠ WARNING

Breathing Hazard - Carbon Monoxide Gas

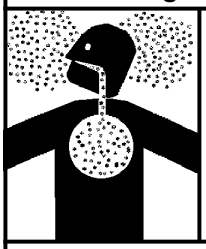

- For operation above 10,100 ft. (3,079 metres) a high altitude orifice must be installed.
- Contact a qualified installer or service agency.

Breathing carbon monoxide can cause brain damage or death. Always read and understand instruction manual.

This heater is approved for operation up to 10,100 feet without alteration.

Failure to replace standard orifice with a high altitude orifice when installed above 10,100 feet could result in improper and inefficient operation of the appliance, producing carbon monoxide gas in excess of safe limits, which could result in serious injury or death. Contact your gas supplier for any specific changes which may be required in your area.

GAS PIPING

⚠ WARNING



Fire and Explosion Hazard

- Do not use water heater with any gas other than the gas shown on the rating plate.
- Excessive pressure to gas control valve can cause serious injury or death.
- Turn off gas lines during installation.
- Contact qualified installer or service agency.

⚠ WARNING



Explosion Hazard

Have a qualified technician make sure that the L.P. gas operating pressure does not exceed 13" water column.

Failure to do so can result in death, explosion, or fire.

Make sure the gas supplied is the same type listed on the model rating plate. The inlet gas pressure must not exceed 14 inch w.c. for natural gas and propane gas. The minimum inlet gas pressure shown on the rating plate is that which will permit firing at rated input.
All gas piping must comply with local codes and ordinances or with the **National Fuel Gas Code (ANSI Z223.1/ NFPA-54)**. Copper or brass tubing and fittings (except tin lined copper tubing) should not be used.
If the gas control valve/thermostat is subjected to pressures exceeding 1/2 psi, the damage to the gas control valve/thermostat could result in a fire or explosion from leaking gas.

If the main gas line shut-off serving all gas appliances is used, also turn “OFF” the gas at each appliance. Leave all gas appliances shut “OFF” until the water heater installation is complete.

A gas line of sufficient size must be run to the water heater. Consult the current edition of **National Fuel Gas Code (ANSI Z223.1/NFPA 54)** and your gas supplier concerning pipe size.

There must be:
- A readily accessible manual shut-off valve in the gas supply line serving the water heater, and
- A sediment trap (dirt leg) ahead of gas control valve/ thermostat to help prevent dirt and foreign materials from entering the gas control valve/thermostat.
- A flexible gas connector or a ground joint union between the shut-off valve and gas control valve/thermostat to permit servicing of the unit.

Be sure to check all the gas piping for leaks before lighting the water heater. Use a soapy water solution, not a match or open flame. Repair and retest as required. When finished, rinse off soapy solution and wipe dry.

⚠ WARNING

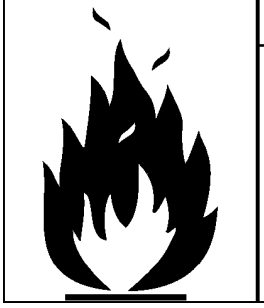

Fire and Explosion Hazard

- Use joint compound or tape compatible with propane.
- Leak test before operating heater.
- Disconnect gas piping and shut-off valve before pressure testing system.

Use pipe joint compound or Teflon tape marked as being resistant to the action of gases.

The appliance and its gas connection must be leak tested before placing the appliance in operation.

The appliance and its individual shut-off valve should be disconnected from the gas supply piping system during any pressure testing of that system at test pressures in excess of 1/2 psi. It should be isolated from the gas supply piping system by closing its individual manual shut-off valve during any pressure testing of the gas supply piping system at test pressures equal to or less than 1/2 psi.

Connecting gas piping to the gas control valve/thermostat of water heater can be accomplished by either of two methods shown in Figure 25 & Figure 26.

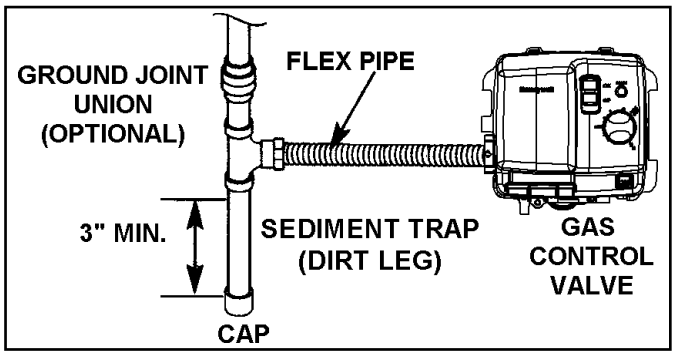

Figure 25.

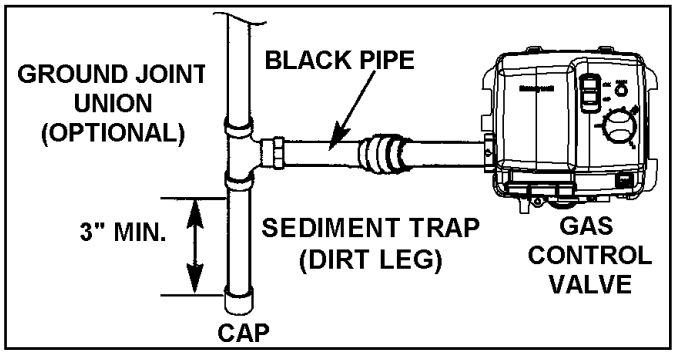

Figure 26.

SEDIMENT TRAPS/DIRT LEG

⚠ WARNING

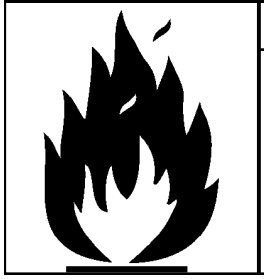

Fire and Explosion Hazard

- Contaminants in gas lines can cause fire or explosion.
- Clean all gas piping before installation.
- Install sediment trap in accordance with NFPA54.

A sediment trap should be installed as close to the inlet of the water heater as practical at the time of water heater installation. The sediment trap should be either a tee fitting with a capped nipple in the bottom outlet or other device recognized as an effective sediment trap. If a tee fitting is used, it should be installed in conformance with one of the methods of installation shown in Figure 25 & Figure 26.
Contaminants in the gas lines may cause improper operation of the gas control valve/thermostat that may result in fire or explosion. Before attaching the gas line be sure that all gas pipe is clean on the inside. To trap any dirt or foreign material in the gas supply line, a sediment

trap (sometimes called a dirt leg) must be incorporated in the piping. The sediment trap must be readily accessible. Install in accordance with the “Gas Piping” section. Refer to the current edition of the **National Fuel Gas Code (ANSI Z223.1/NFPA 5 4)**.

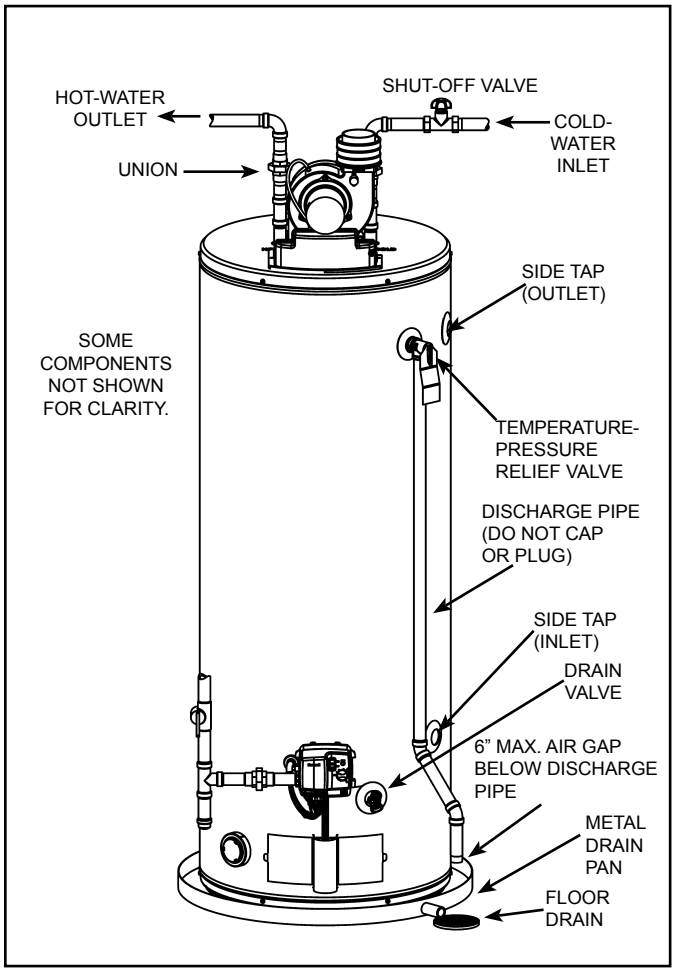

Figure 27.

FILLING THE WATER HEATER

CAUTION

Property Damage Hazard

- Avoid water heater damage.
- Fill tank with water before operating.

- Do not insert the power cord into the electrical receptacle until the heater has been fully installed.
- Never use this water heater unless it is completely full of water. To prevent damage to the tank, the tank must be filled with water. Water must flow from the hot-water faucet before turning “ON” gas to the water heater.

To fill the water heater with water:

1. Close the water heater drain valve by turning handle to the right (clockwise). The drain valve is on the lower front of water heater (see Figure 27).
2. If the heater is equipped with plumbing side taps and they are not connected to piping, ensure that the side taps have been closed with pipe plugs.
3. Open all hot-water faucets served by the water heater to allow air to escape from the tank and the water piping. Ensure any shut-off valves between the heater and the faucets are the open position.
4. Open the cold-water supply valve to the water heater. Notes:
   - The cold-water supply valve must be left open when the water heater is in use.
   - Avoid water leakage when filling the tank. Do not allow the insulation of the water heater to get wet as water can reduce the effectiveness of the insulation.
5. To ensure complete filling of the tank, allow air to exit by opening nearest hot-water faucet. Allow water to run until a constant flow is obtained. This will let air out of the water heater and the piping.
6. Check all water piping and connections for leaks. Repair as needed.

VENTING

WARNING

Breathing Hazard - Carbon Monoxide Gas

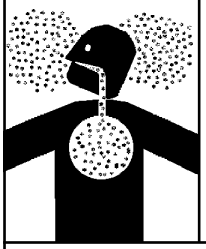

- Install vent system In accordance with codes.
- Do not operate water heater if flood damaged.
- Install water heater in accordance with the instruction manual.
- Do not operate if soot buildup is present.
- Do not obstruct water heater air intake(s) with insulating blanket.
- Do not place chemical vapor emitting products near water heater.
- Gas and carbon monoxide detectors are available.
- Never operate the heater unless it is vented to the outdoors and has adequate air supply to avoid risks of improper operation, fire, explosion or asphyxiation.
- Analyze the entire vent system to make sure that condensate will not become trapped in a section of vent pipe and therefore reduce the open cross sectional area of the vent.

Breathing carbon monoxide can cause brain damage or death. Always read and understand instruction manual.

Important: DO NOT common vent this water heater with any power vented appliance. DO NOT vent into a common chimney.

TERMINATION CLEARANCES SIDEWALL POWER VENT

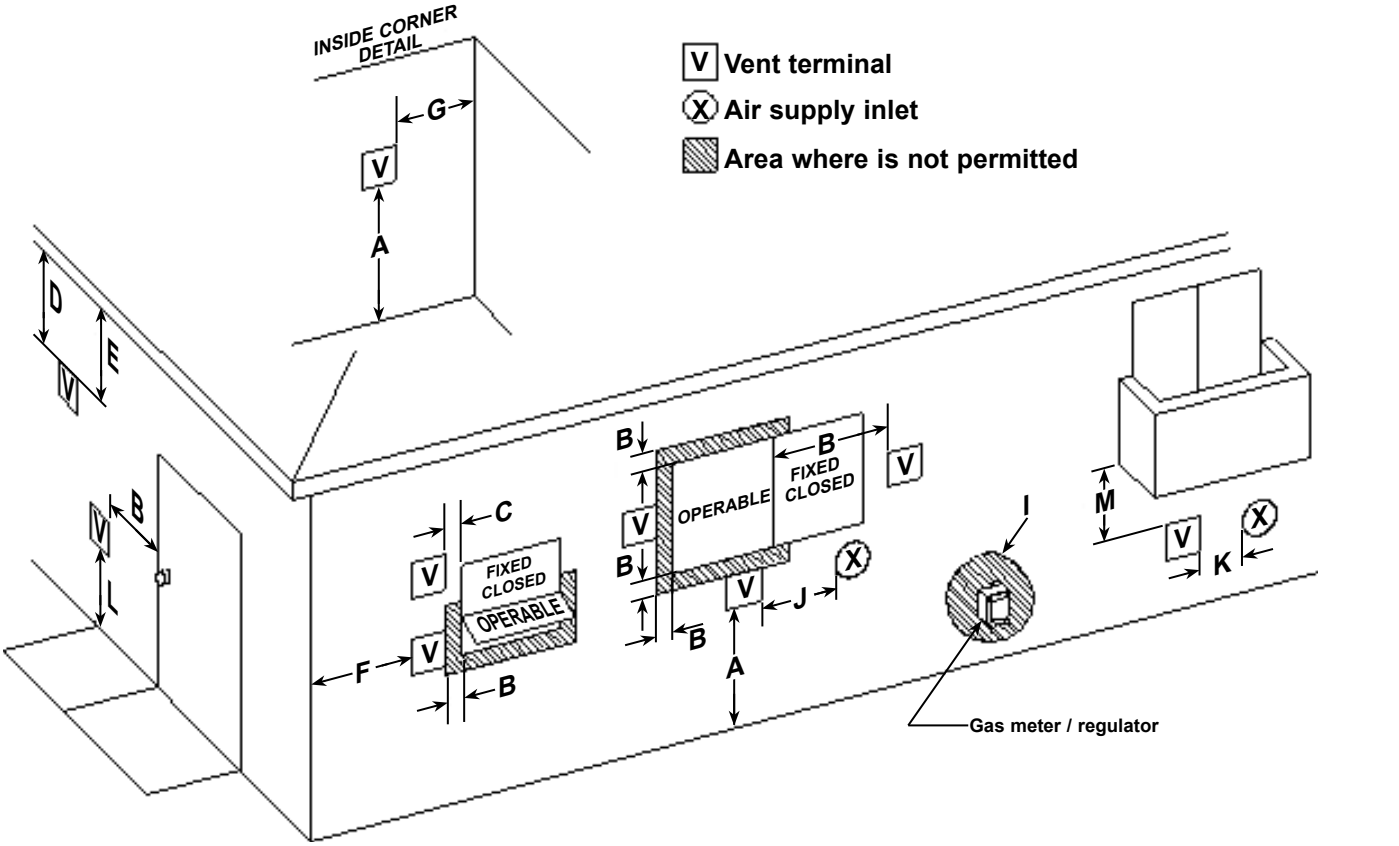

Figure 28.

Vent terminal clearances for “Power Vent” installations. Power Vent configurations use room air for combustion.

A	Clearance above grade, veranda, porch, deck or balcony	12 in.	H	Clearance to each side of center line extended above meter/regulator assembly	N/A
B	Clearance to window or door that may be opened	4 ft. below or to side of opening; 1 ft. above opening	I	Clearance to service regulator vent outlet	3 ft.*
C	Clearance to permanently closed window	12 in.*	J	Clearance to a non mechanical air supply inlet into building or combustion air inlet to any other appliance	4 ft. below or to side of opening; 1 foot above opening.
D	Vertical clearance to ventilated soffit located above the terminal within a horizontal distance of 2 ft. from the center line of the terminal	12 in.*	K	Clearance to a mechanical air supply inlet	3 ft. above if within 10 ft. horizontally
E	Clearance to unventilated soffit	12 in.*	L	Clearance above paved sidewalk or paved driveway located on public property	7 ft.†
F	Clearance to outside corner	2 ft.*	M	Clearance under veranda, porch, deck, or balcony	12 in.‡
G	Clearance to inside corner	18 in.*			

In accordance with the current ANSI Z223.1/NFPA 54, National Fuel Gas Code.
† A vent shall not terminate directly above a sidewalk or paved driveway that is located between two single family dwellings and serves both dwellings.
‡ Permitted only if veranda, porch, deck, or balcony is fully open on a minimum of two sides beneath the floor.
* Clearance in accordance with local installation codes and the requirements of the gas supplier and the manufacturer’s installation instructions.

BLOWER ASSEMBLY INSTALLATION

1. This power vented water heater comes with blower assembly installed (see Figure 29).
2. After unit is set in place, make sure blower assembly is still mounted securely. Make sure there is no damage to blower.

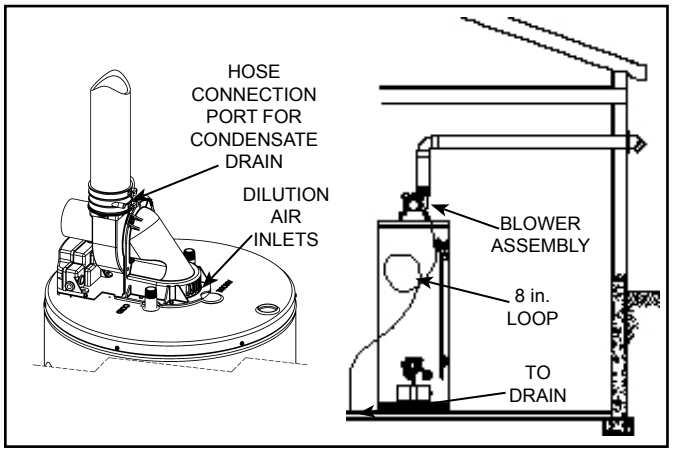

Figure 29.

3. Make sure there is no packing material in the inlet or discharge of the blower.
4. Make sure that the plastic tubing is still attached from the air pressure switch to the port on the blower housing. Make sure the plastic tubing is not folded anywhere between the pressure switch and the blower housing (see Figure 37 thru Figure 41).
5. This water heater is a polarity sensitive appliance and will not operate if the power supply polarity is reversed. Power to this water heater must be wired properly (correct polarity).
6. Do not plug in power cord until vent system is completely installed. The Power Vent operates on 110 -120 VAC. therefore a grounded outlet must be within reach of the 6 foot flexible power cord supplied with the heater. The power cord supplied may be used on a unit only where local codes permit. If local codes do not permit use of flexible power supply cord:
   a. Make sure the unit is unplugged from the wall outlet. Remove the screw and open panel on the front of the junction box on the blower.
   b. Cut the flexible power cord, leaving enough to be able to make connections. Remove the strain relief fitting from the box.
   c. Install a suitable conduit fitting inside the enclosure.
   d. Splice field wiring into existing wiring using code authorized method (wire nuts, etc).
   e. Be certain that the neutral and line connections are not reversed when making these connections.
   f. Ground heater properly. This water heater must be grounded in accordance with the National Electrical Code NFPA 70 and/or local codes. These must be followed in all cases. The water heater must be connected to a grounded metal, permanent wiring system or an equipment grounding conductor must be run with the circuit conductors and connected to the equipment grounding terminal or lead on the water heater (see Figure 12; the wiring diagram).
   g. Close the panel on the junction box. Make sure that the access panel is secured shut.
7. The blower discharge boot is made to accept only straight sections of 2” or 3” pipe. To start off with an elbow, a short section of the straight pipe must be cut and glued into the end of the elbow that will mount on the discharge boot.

INSTALLATION OF VENT SYSTEM

Before beginning installation of piping system, thoroughly read the “Vent Pipe Preparation” section of this manual.

PLANNING THE VENT SYSTEM

Plan the layout of the vent system from the vent termination to the water heater considering all of the 90 degree and 45 degree elbows plus the number of feet of pipe that would be needed to install the total vent system. The water heater must be vented to the outdoors as described in these instructions. This water heater must be vented separately from all other appliances.

The unit may be vented horizontally through a wall or vertically through the roof. Pipe runs must be adequately supported along both vertical and horizontal runs.

Note: Do not use an elbow as a support point. Elbows are not designed to carry the load or stresses of the venting system if they are rigidly held.

It is imperative that the first hanger (or support) be located on the horizontal run immediately adjacent to the first 90-degree elbow from the vertical rise. Support method used should isolate the vent pipe from the floor joists or other structural members to prevent the transmission of noise and vibration. Do not support, pin, or otherwise secure the venting system in a way that restricts the normal thermal expansion and contraction of the chosen venting material.

If the water heater is being installed as a replacement for an existing power vented heater in pre-existing venting, a thorough inspection of existing venting system must be performed prior to any installation work. Verify that correct material, as detailed in below, has been used, and that the minimum or maximum vent lengths and terminal location as detailed in this manual have been met.

HIGH AMBIENT TEMPERATURE INSTALLATIONS

This heater requires room air to lower the flue gas temperatures before the gases pass through the vent system. The dilution air inlets are located on the rear of the blower assembly (see Figure 2 & Figure 29).
As the room temperature rises, the ability to lower the flue gases lessens so special attention to the choice of venting material is required. Establishing the ambient temperatures where the heater and the venting is installed is very important, especially in regions with warmer climates or any region that experiences hot summers. Ambient conditions hotter than 110°F require that the venting

material be either CPVC or polypropylene. Areas that can experience high ambient environments include closets, alcoves, areas under staircases, attics-especially in metal roofed buildings, areas with restricted air movement, rooms with large solar gains, metal sheds, industrial or commercial enterprises and venting systems exposed to direct sunlight. For high temperature environments, obtain high limit switch upgrade Kit # 9008306015 and use the higher rated vent piping.

Note: This unit can be vented with the following piping:

PVC pipe materials (solid pipe)	DWV ASTM-D2665 Schedule 40, 80* & 120* ASTM-D1785, SDR Series ASTM-D2241
PVC pipe materials (cellular core)	ASTM-D4396
CPVC pipe materials	CPVC 41 ASTM-D2846 Schedule 40, 80* & 120* ASTM-F441 SDR Series ASTM-F442,
ABS pipe materials	DWV ASTM-D2661 Schedule 40
ABS pipe materials (cellular core)	ASTM F-628
Polypropylene vent system	UL-1738
*** NOTE:** USING SCHEDULE 80 OR 120 SIGNIFICANTLY REDUCES THE VENT LENGTH.	

Note: If local codes require venting to be marked suitable for use as gas venting, type BH venting may be used.

The fittings, other than the Termination should be equivalent to:

PVC pipe	PVC DWV ASTM D-2665
CPVC pipe	CPVC ASTM F-438
ABS pipe	ABS ASTM D-2661/3311
Polypropylene vent system	UL-1738

If CPVC or ABS pipe and fittings are used, the proper cement must be used for all joints, including joining the pipe to Termination (PVC Material). If local codes do not allow the use of the PVC termination when a material other than PVC is used for venting, an equivalent fitting of that material may be substituted if the screen in the PVC terminal is removed and inserted into the new fitting.

This water heater is supplied with a 45 degree PVC termination elbow and the applicable vent screens. A 90 degree termination elbow is optional.

ASTM D-2564 Grade Cement should be used on PVC Materials and ASTM F-493 Grade Cement on CPVC Materials.

POLYPROPYLENE VENT SYSTEMS

Polypropylene vent systems do not use cement to connect the pipe and elbow sections but use a push together gasket seal method. Do not attempt to connect polypropylene with sealant cement.

Polypropylene vent systems are designed to use specific adaptors to connect into the rubber coupling on the top of the blower. These are available through your venting supplier.

The PVC vent termination elbow supplied with this heater has been certified to be used with polypropylene vent systems. A polypropylene to PVC end connection is required and is available through your supplier.

Optional wall plates that fit the polypropylene venting are also available through your supplier.

Carefully inspect the entire venting system for any signs of cracks or fractures, particularly at joints between elbows and other fittings and straight runs of vent pipe. Check system for signs of sagging or other stresses in joints as a result of misalignment of any components in the system. If any of these conditions are found, they must be corrected in accordance with the venting instructions in this manual before completing installation and putting the water heater into service.

The vent piping shall be connected to the blower with the rubber coupling and secured with gear clamps. The coupling and clamps are provided with the heater.

Even though the flue gas temperature leaving the blower is hot, some installations will have water condense in the vent piping. If this occurs, then adequate means of draining and disposing of the condensate shall be made by the installer.

CONDENSATE

Condensate formation does not occur in all installations of power vented water heaters, but should be drained on installations where it can form in the venting system. Condensation in the venting system of power vented water heaters is dependent upon installation conditions including, but not limited to, ambient temperature and humidity of installation location, ambient temperature and humidity of venting space, vent discharge and slope, and product usage. In certain conditions, installations in unconditioned space or having long horizontal or vertical vent runs can accumulate condensate. Long lengths of venting that pass through cool/cold areas will experience condensation. The vent pipe should be sloped upwards away from the blower assembly, then adequate means for draining and disposing of the condensate needs to be made by the installer. If installation conditions cause condensation, install a condensate trap loop approximately 8 in. in diameter using 3/8” plastic hose. Connect the hose to the built-in drain port of the rubber coupling of the blower assembly (see Figure 29). Loop the hose in a vertical position as shown. The tube loop must be filled with water at least half way prior to operating the heater. Ensure the end of the tube has access to a drain as condensate will flow from the end. Secure the tubing to the side of the heater. Prior to operating the water heater, make sure the removable cap is installed on the drain port (if a drain hose is not needed).

Note: This cap must remain in place if a drain hose is not installed.

EXHAUST VENTING

This heater is designed to exhaust the products of combustion (flue gases) to the outdoors using a sealed piping system. Table 2 lists the allowable vent materials and sizing information. Figure 33 shows the general venting layout while Figure 37 thru Figure 41 show various end termination details and clearances. Connection of the venting piping to the blower is shown in Figure 37 thru Figure 41.

Correct installation of the venting system is essential to the safe and efficient operation of this water heater. Vent piping must be installed in accordance with all applicable codes. All installations shall meet the requirements as stated in the current edition of the **"National Fuel Gas Code, ANSI Z223.1/NFPA 54"**.

Note: The information provided in Figure 28 is intended as a guideline for good vent installation practices only and is not intended to restrict venting options beyond those restrictions established by the current edition of the "**National Fuel Gas Code, ANSI Z223.1/NFPA 54"** or any applicable local and state codes.

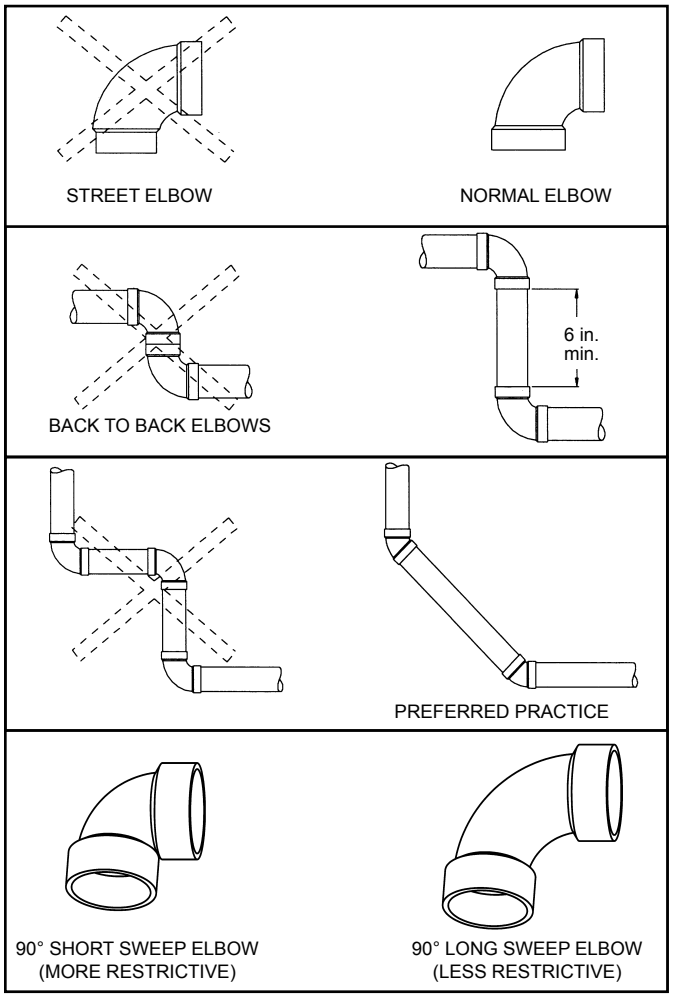

Figure 30.

Important Notes and Warnings

- This heater is certified to be installed using PVC, CPVC, ABS or polypropylene plastic vent material. Only use approved material. All venting material and components must be joined with the approved primer/cleaner and solvent cement.
- Do not common vent this heater with any other appliance.
- During operation the plastic piping will expand as it heats up and contract as it cools down. This is normal for this type of venting. Rigidly fastening the vent piping can cause undue stress that may result in the cracking or fracturing the vent piping material. A fracture of the venting pipe may pose a serious safety hazard. To prevent stressing of the vent system, all hangers and supports must allow the vent piping freedom to move.
- Use long sweep elbows wherever possible. Closely-coupled elbows and short radius elbows can reduce the venting capacity.
- All power vented water heaters generate a certain amount of operational noise. In order to minimize noise transmission to the support structure, use isolation pads between the pipe hangers and the vent pipe.
- Most power vent installations develop some condensation in the vent piping. When using long runs of venting or when the venting passes through cold or unheated areas, considerable amounts of condensate from the flue gases can develop. Provision must be made for the condensate to drain freely from the system or to be collected in a condensate trap(s) that can be drained. Damage or fracture of the vent piping may occur if the condensate is allowed to collect and freeze. Pooling of condensate can restrict airflow and can cause nuisance failures of the system.

Venting terminations and sizing

- Refer to Figure 33 and Table 2 for vent pipe materials and sizing. Examples of the vent terminations are shown in Figure 34 & Figure 35. If the installation requires a vent riser, suitable drainage must be provided to ensure condensation does not accumulate. Termination through a roof is shown Figure 36.
- 40, 50 and 60 gallon heaters with rated inputs of 50k Btu/hr or less are supplied with a 2”-3” rubber coupling to attach the venting to the blower and a 2”, 45° vent termination elbow.

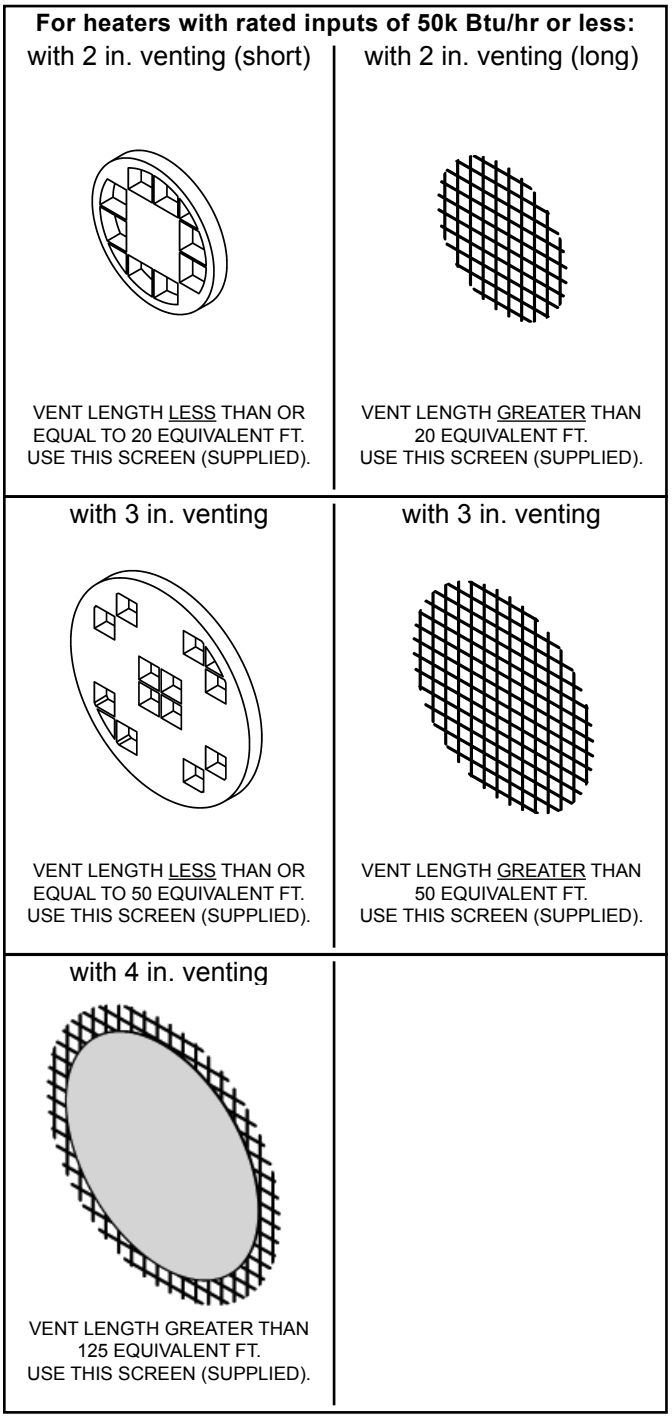

Figure 31.

- 50 and 75 gallon heaters with a rated input of 60k Btu/hr or more are supplied with a 3”-3” rubber coupling to attach the venting to the blower and a 3”, 45° vent termination elbow.
- Supplied with this heater are several vent termination screens (see Figure 31 & Figure 32).

Installed in the vent termination elbow, the vent screen is required to keep foreign objects, rodents and small birds from entering the venting system. These screens have been sized to ensure maximum energy efficiency of the vent system based on the “equivalent length” of the vent piping. CHOOSE ONLY the ONE SCREEN THAT MATCHES YOUR VENTING CONFIGURATION (see Figure 31 & Figure 32). How to determine the “equivalent length” is shown in Figure 33 and in Table 2.

Vent screen installation

- Install the appropriate vent screen into the vent termination elbow.
- Gently push the screen into the termination elbow until it sits against the inside shoulder.
- The metal wire screens are self-securing.
- Plastic screens must be secured with (2) drops of silicone sealant. This will allow for easy removal for inspection and cleaning.

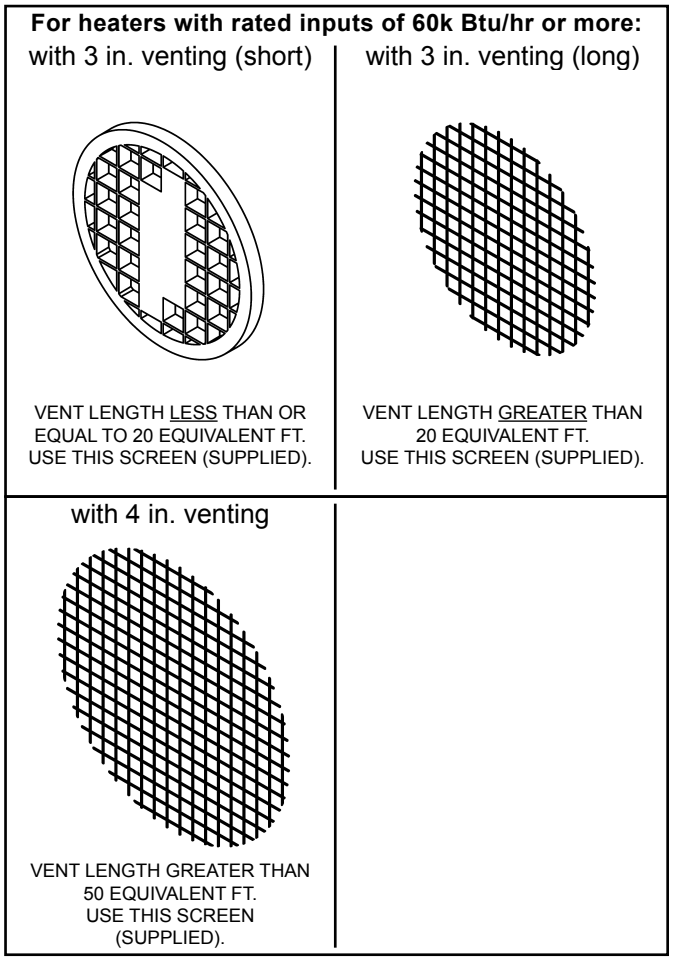

Figure 32.

Calculating Equivalent Feet

WATER HEATER MODEL	HEATER INPUT (Btu/hr)	VENT SIZE (Inside Diam.)	PRESSURE SWITCH SETTING	MAXIMUM EQUIVALENT VENT LENGTH	MINIMUM EQUIVALENT VENT LENGTH
40 & 50 gal.	40,000	2”	- 0.27 in. w.c.	50 ft. + termination elbow	7 ft. termination elbow
60 gal.	42,000		- 0.27 in. w.c.		
40 & 50 gal.	50,000		- 0.37 in. w.c		
40 & 50 gal.	40,000	3”	- 0.27 in. w.c.	125 ft. + termination elbow	7 ft. termination elbow
60 gal.	42,000		- 0.27 in. w.c.		
40 & 50 gal.	50,000		- 0.37 in. w.c.		
50 gal. (short)	62,000	3”	- 0.99 in. w.c.	50 ft. + termination elbow	7 ft. + termination elbow
50 gal. (tall)	65,000		- 0.99 in. w.c.		
75 gal.	72,000		- 0.99 in. w.c.		
40 & 50 gal.	40,000	4”	- 0.27 in. w.c.	180 ft. + termination elbow	125 ft. + termination elbow
60 gal.	42,000		- 0.27 in. w.c.		
40 & 50 gal.	50,000		- 0.37 in. w.c.		
50 gal. (short)	62,000	4”	- 0.99 in. w.c.	125 ft. + termination elbow	50 ft. + termination elbow
50 gal. (tall)	65,000		- 0.99 in. w.c.		
75 gal.	72,000		- 0.99 in. w.c.		

Equivalent lengths of straight pipe for various elbows using Schedule 40 PVC, CPVC and polypropylene.

Size	Type	Short Sweep/ Short Radius	Long Sweep/ Long Radius
2” 3" 4"	90° elbow	8 ft.	5 ft.
2” 3" 4"	45° elbow	4 ft.	2.5 ft.

Notes:
1. Use long radius elbows where possible. Minimum distance between 90º elbows should be 6” wherever possible.
2. Venting systems may use a maximum of five (5) 90° elbows.
3. Use proper screen termination (see Figure 31 & Figure 32).

Table 2.

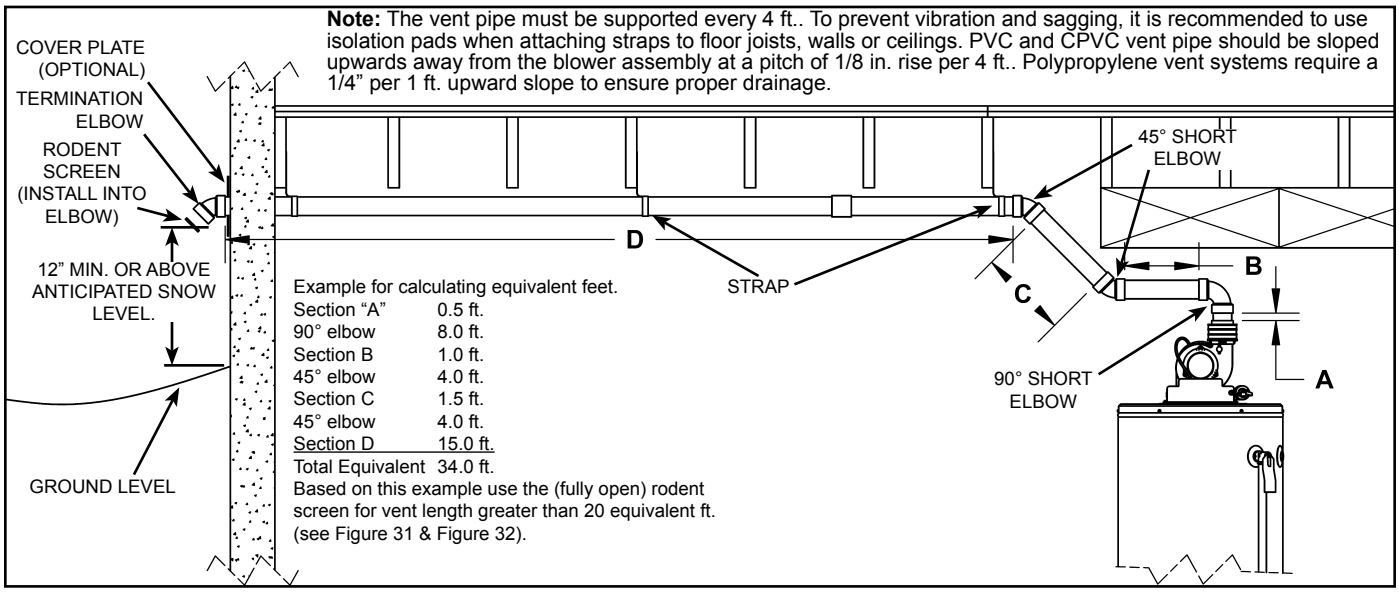

Figure 33.

Venting instructions

1. Plan the venting layout starting at the vent termination and work back toward the heater. Take into consideration the style and position of the vent termination, the vent pipe routing, elbows and connectors required and the necessary support hangers.
2. Venting should be as direct as possible with the fewest number of fittings. Use long radius 45 degree and long radius 90 degree elbows wherever possible.
3. Avoid using 90 degree elbows “back to back” and do not use street elbows. Maintain a minimum 6” straight section between elbows. Closely coupled and short radius elbows reduce the venting capacity. Figure 30 shows examples of vent pipe connections.
4. DO NOT USE AN ELBOW AS A SUPPORT POINT. Elbows are not designed to carry the weight of the venting system.
5. Calculate “Equivalent Vent Length” before starting. Do not exceed the values shown in Table 2. An example of how this length is determined is shown in Figure 33. The value from your calculations should also be used to determine which rodent screen to install into the vent termination elbow.
6. Measure the vent piping and cut to required lengths. Pipes must be cut at right angles and deburred to ensure a good smooth fit with sufficient overlap for the glue joints. Correct any interference conditions.
7. Provide support hangers for horizontal vent piping every 4 ft. to prevent sagging and stress. Provide a minimum of 1/8” rise per 4 ft. of vent piping to ensure adequate drainage (polypropylene vent systems require a 1/4 in. rise per 1 ft. of vent pipe). Horizontal vent piping must not sag to form valleys where condensate can collect. Vertical venting shall be supported every 5 ft.. Use appropriate support straps and vibration isolators (foam pads) on straight sections only. Allow sufficient clearance for expansion and contraction of the venting system.
8. At the point where the venting exits the building, cut a 2-1/2” hole for 2” venting, a 3-1/2” hole for 3” venting or a 4-1/2” hole for 4” venting. For sidewall applications, use the appropriate metal cover plate as a template to mark the hole for the vent pipe to pass through the wall. BEWARE OF CONCEALED WIRING AND PIPING INSIDE THE WALL.
9. Insert the vent piping through this hole and secure into position. Connect the vent pipe to the end termination elbow as shown in Figure 34 thru Figure 36.
10. Dry fit all vent pipes, elbows, connectors and fittings before joining any parts with solvent cement. PARTS MUST FIT WITHOUT STRESS OR BENDING OF ANY SECTION and each connection must overlap a minimum of 1/2”. Do not force fit any of the connections. Use only the appropriate solvent cement. Caution: Solvent cements may produce flammable vapors. Use only in well-ventilated areas and keep away from all sources of ignition.

    Note: DO NOT use solvent cement on polypropylene vent systems.

11. Install the properly sized rodent screen into the outlet elbow and secure with a small quantity of silicone sealant. Refer to Figure 31 & Figure 32 to determine the proper screen.
12. Do not seal the vent piping to the wall until the venting is properly connected to the blower assembly.
13. Complete the venting installation by sealing around the termination assembly where it passes through the outside wall, inside and out, with silicone or other suitable sealant. Apply enough sealant to secure the (optional) cover plate to the wall.

CAUTION

Use of Solvent Cement and Primer

- Use only in well-ventilated areas.
- Do not use near flame or open fire.
- Use only the Solvent Cement and Primer appropriate for the venting material being used.
- Solvent cements for plastic pipe are flammable liquids and must be kept away from all sources of ignition.

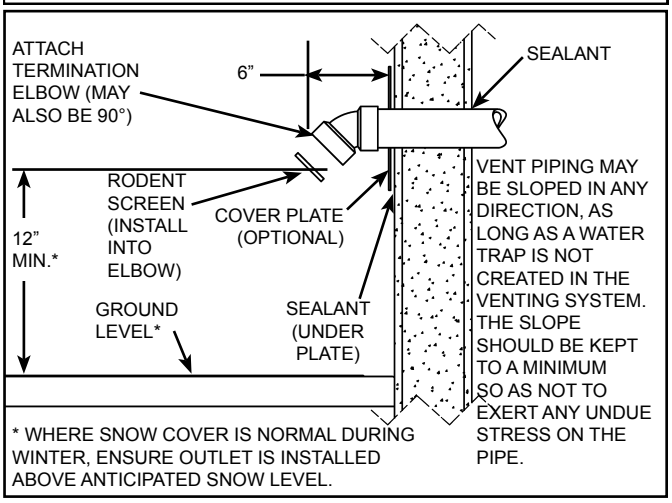

Figure 34.

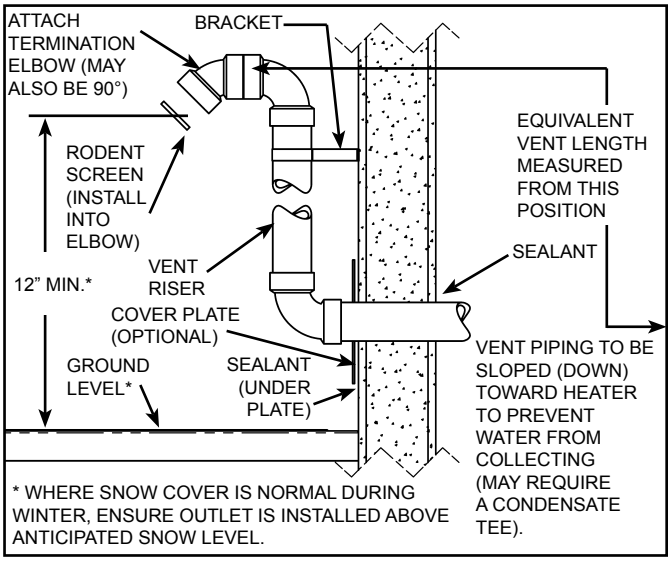

Figure 35.

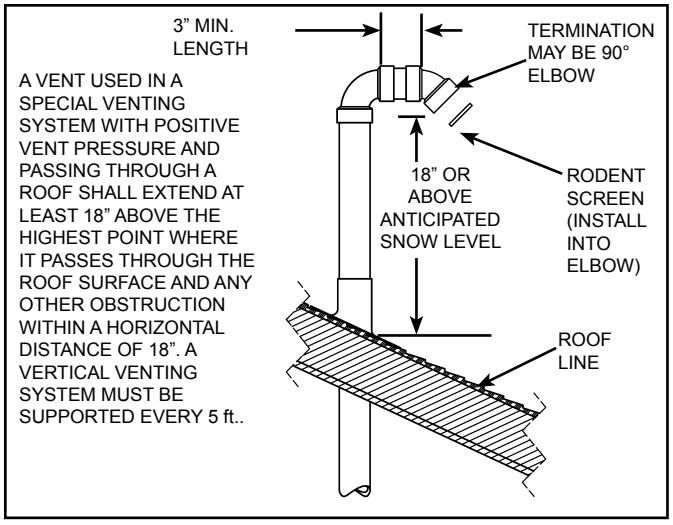

Figure 36.

Vent pipe connection to blower

1. The plastic vent piping connects into the rubber coupling located on the top of the blower assembly. This coupling includes gear clamps to connect the venting to the blower. These connections must be properly seated and tightened to prevent the leakage of flue gases into the area. See Figure 37 thru Figure 41.
2. The 40, 50 and 60-gallon heaters with rated inputs of 50k Btu/hr or less are designed and supplied with a 2” rubber coupling to accept the vent pipe.
3. The 50 and 75-gallon models with rated inputs of 60k Btu/hr or more are supplied with a 3” rubber coupling to accept the vent pipe. Note: Polypropylene vent systems require separate adaptor.
4. Before installing clean and lightly sand the end of the PVC/CPVC plastic vent piping that will connect into the rubber coupling. For polypropylene vent systems follow manufacturer’s instructions.
5. Loosen the upper clamp on the rubber coupling and insert the sanded end of the vent piping a full 1-1/4”. Do not use glue or sealant in the rubber coupling. Check that there is no stress on the connection or the vent piping that may be caused by twisting or bending.
6. Tighten the upper clamp so that the vent piping is firmly secured in the coupling and is gas tight. Do not over tighten or cause distortion of any of the parts. Ensure the bottom of the rubber coupling is firmly seated on the blower outlet and that the lower gear clamp is also secure. Check to ensure there is no distortion or movement of the clamped assembly once it is completed.

CAUTION

Property Damage Hazard

- Do not overtighten the top and bottom gear clamps of the rubber coupling.
- Do not apply solvent cement or silicone to the rubber coupling connection.

Different coupling installations according to vent sizes

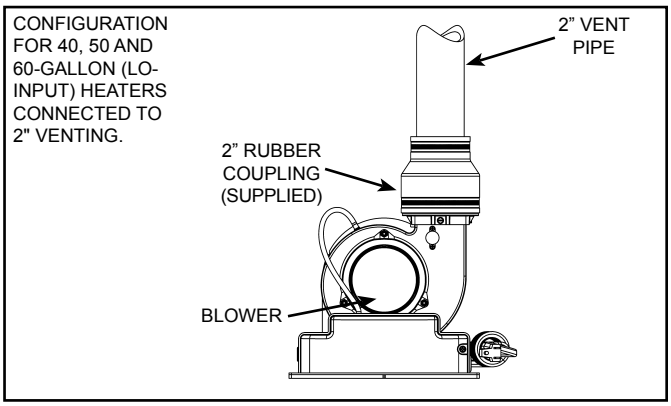

Figure 37.

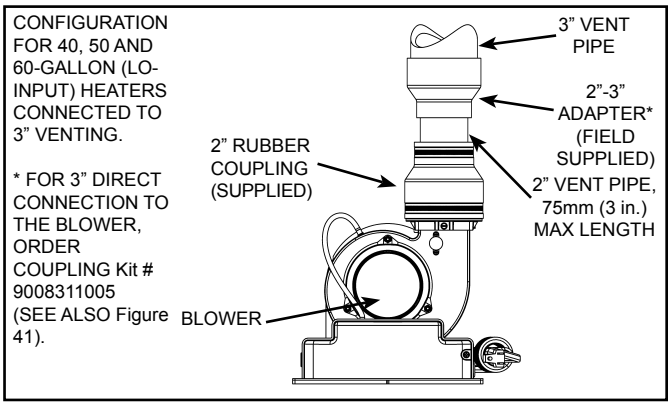

Figure 38.

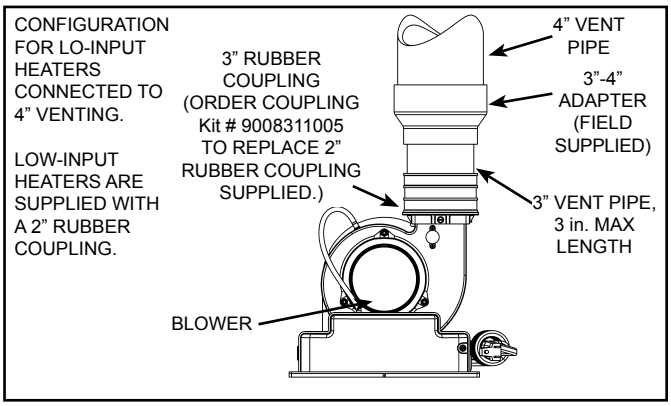

Figure 39.

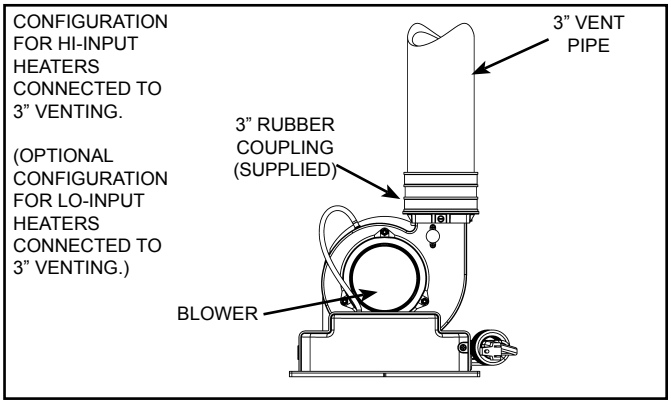

Figure 40.

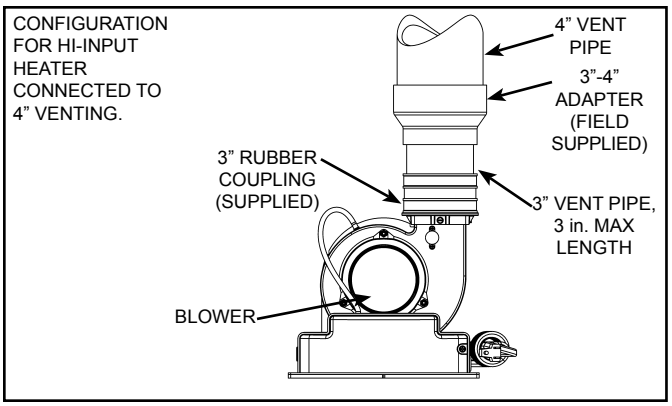

Figure 41.

BLOWER EXHAUST DIRECTION

The blower assembly may be rotated 90 degree clockwise or counterclockwise to allow horizontal venting in areas having restricted space above the water heater. To rotate the blower outlet, remove the four nuts (with 11/32" nut driver) (see Figure 42), securing the flue collector to the blower housing. Pull the blower assembly forward to free it from the mounting studs. Rotate the blower housing clockwise or counter-clockwise and align the four holes and screws together. Reattach the blower housing to the flue collector.

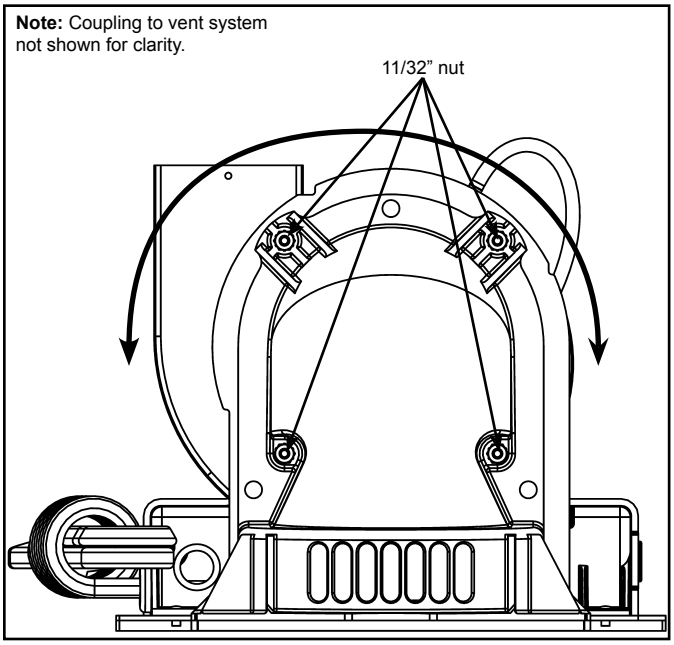

Figure 42.

VENT PIPE PREPARATION

1. INITIAL PREPARATION
   - Make sure the solvent cement you are planning to use is designed for the specific application you are attempting.
   - Know the physical and chemical characteristics and limitations of the PVC and CPVC piping materials that you are about to use.
   - Know the reputation of your manufacturer and their products.
   - Know your own qualifications or those of your contractor. The solvent welding technique of joining PVC and CPVC pipe is a specialized skill just as any other pipe fitting technique.
   - Closely supervise the installation and inspect the finished job before start-up.
   - Contact the manufacturer, supplier, or competent consulting agency if you have any questions about the application or installation of PVC and CPVC pipe.
   - Take the time and effort to do a professional job. Shortcuts will only cause you problems and delays in start-up. By far, the majority of failures in PVC and CPVC systems are the result of shortcuts and/or improper joining techniques.

2. SELECTION OF MATERIALS (PCV and CPVC VENTING)
   - Cutting Device - Saw or Pipe Cutter
   - Deburring Tool, Knife, File, or Beveling Machine (2" and above)
   - Brush - Pure Bristle
   - Rag - Cotton (Not Synthetic)
   - Primer and Cleaner
   - Solvent Cement - PVC for PVC Components and CPVC for CPVC Components only
   - Containers - Metal or Glass to hold Primer and Cement. Select the type of PVC or CPVC materials to be used on the basis of their application with respect to chemical resistance, pressure rating, temperature characteristics, etc.
   - Insertion Tool - Helpful for larger diameter pipe and fittings 6" and above.

⚠ WARNING

Fire or Explosion Hazard

- Do not store or use gasoline or other flammable vapors and liquids in the vicinity of this or any other appliance.
- Avoid all ignition sources if you smell gas.
- Do not expose water heater control to excessive gas pressure.
- Use only gas shown on rating plate.
- Maintain required clearances to combustibles.
- Keep ignition sources away from faucets after extended period of non-use.

Read instruction manual before installing, using or servicing water heater.

Primer:

It is recommended that Tetrahydrofuran (THF) be used to prepare the surfaces of pipe and fittings for solvent welding. Do not use water, rags, gasoline or any other substitutes for cleaning PVC or CPVC surfaces. A chemical cleaner such as MEK may be used.

Cement:

The cement should be a bodied cement of approximately 500 to 1600 centipoise viscosity containing 10-20% (by weight) virgin PVC material solvated with Tetrahydrofuran (THF). Small quantities of Dimethyl Formamide (DMF) may be included to act as a retarding agent to extend curing time. Select the proper cement; Schedule 40 cement should be used for Schedule 40 pipe. Never use all-purpose cements, commercial glues and adhesives or ABS cement to join PVC or CPVC pipe and fittings.

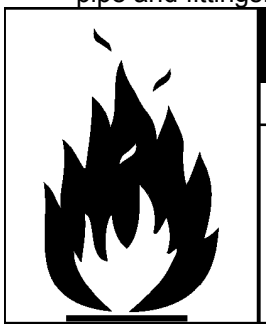

⚠ WARNING

Fire Hazard

- Primers and cements are extremely flammable, and must not be stored or used near heat or open flame.
- Also, use only in a well ventilated area.

Applicators:

Select a suitable pure bristle type paint brush. Use a proper width brush or roller to apply the primer and cement (see chart below). Speedy application of cement is important due to its fast drying characteristics. IMPORTANT NOTE: A dauber type applicator should only be used on pipe sizes 2" and below. For larger diameter pipe, a brush or roller must be used.

RECOMMENDED BRUSH* SIZE FOR PRIMER AND CEMENT APPLICATIONS	
Nominal Pipe (IPS)	Brush Size
2	1.5"
3	1.5" - 2.5"
*USE ONLY NATURAL BRISTLE	

Table 3.

3. MAKING THE JOINT

A. Cutting

Pipe must be squarely cut to allow for the proper interfacing of the pipe end and the fitting socket bottom. This can be accomplished with a miter box saw or wheel type cutter. Wheel type cutters are not generally recommended for larger diameters since they tend to flare the corner of the pipe end. If this type of cutter is used, the flare on the end must be completely removed.

Note: Power saws, if used, should be specifically designed to cut plastic pipe.

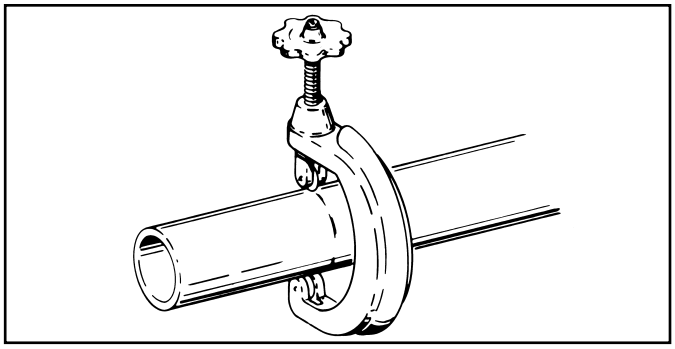

Figure 43.

B. Deburring

Use a knife, plastic pipe deburring tool, or file to remove burrs from the end of small diameter pipe. Be sure to remove all burrs from around the inside as well as the outside of the pipe. A slight chamfer (bevel) of about 10°-15° should be added to the end to permit easier insertion of the pipe into the end of the fitting. Failure to chamfer the edge of the pipe may remove cement from the fitting socket, causing the joint to leak.

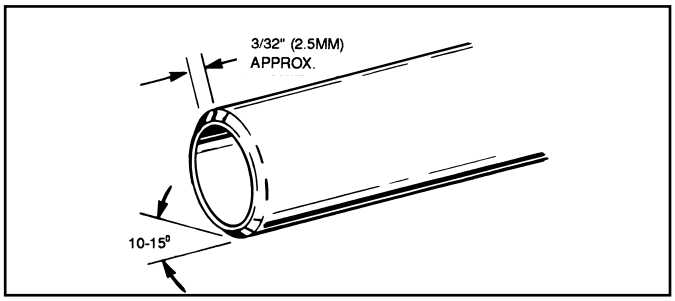

Figure 44.

C. Test dry fit of the joint

Tapered fitting sockets are designed so that an interfaced fit should occur when the pipe is inserted about 1/3 to 2/3 of the way into the socket. Occasionally, when pipe fitting dimensions are at the tolerance extremes, it will be possible to fully insert dry pipe to the bottom of the fitting socket. When this happens, a sufficient quantity of cement must be applied to the joint to fill the gap between the pipe and fitting. The gap must be filled to obtain a strong, leak-free joint.

D. Inspection, cleaning, priming

Visually inspect the inside of the pipe and fitting sockets and remove all dirt, grease or moisture with a clean dry rag. If wiping fails to clean the surfaces, a chemical cleaner must be used. Check for possible damage such as splits or cracks and replace if necessary.

Depth-of-entry

Marking the depth of entry is a way to check if the pipe has reached the bottom of the fitting socket in Step F. Measure the fitting depth and mark this distance on the pipe O.D. You may want to add several inches to the distance and make a second mark as the primer and cement will most likely destroy your first one.

Apply primer to the surface of the pipe and fitting socket with a natural bristle brush. This process softens and prepares the PVC or CPVC for the solvent cementing step. Move quickly and without hesitation to the cementing procedure while the surfaces are still wet with primer.

E. Application of solvent cement

- Apply solvent cement evenly and quickly around outside of pipe at a width a little greater than the depth of the fitting socket.
- Apply a light coat of cement evenly around the inside of the fitting socket. Avoid puddling.
- Apply a second coat of cement to the pipe end.

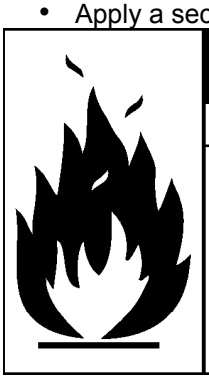

⚠ WARNING

Fire Hazard

- Cans of cement and primer should be closed at all times when not in use to prevent evaporation of chemicals and hardening of cement.
- They are also very flammable and should be kept away from heat or flame.

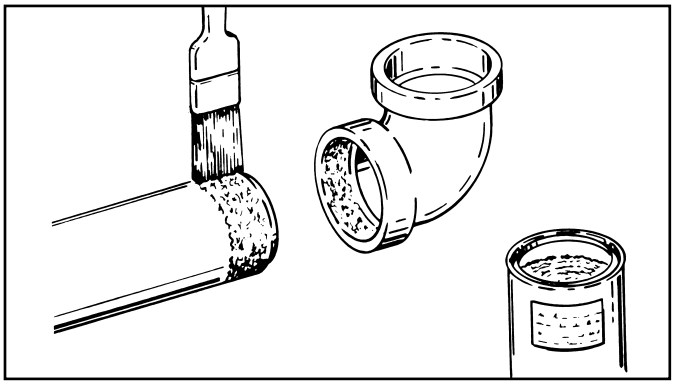

Figure 45.

F. Joint assembly

Working quickly, insert the pipe into the fitting socket bottom and give the pipe or fitting a 1/4 turn to evenly distribute the cement. Do not continue to rotate the pipe after it has hit the bottom of the fitting socket. A good joint will have sufficient cement to make a bead all the way around the outside of the fitting hub. The fitting will have a tendency to slide back while the cement is still wet so hold the joint together for about 15 seconds.

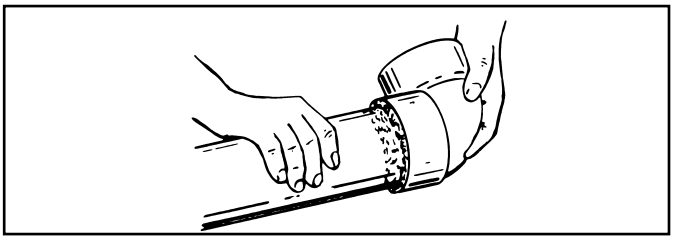

Figure 46.

G. Cleanup and joint movement

Remove all excess cement from around the pipe and fitting with a dry cotton rag. This must be done while the cement is still soft.

The joint should not be disturbed immediately after the cementing procedure, and sufficient time should be allowed for proper curing of the joint. Exact drying time is difficult to predict because it depends on variables such as temperature, humidity and cement integrity. For more specific information, you should contact your solvent cement manufacturer.

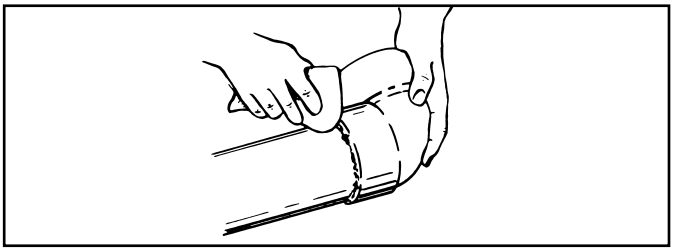

Figure 47.

INSTALLATION CHECKLIST

Note: Use and complete this checklist before lighting the heater. Correct any conditions that do not meet these instructions.

Check Here

Water Heater Location

1. Centrally located with the water piping system. Located as close to gas piping and vent pipe system as possible. ☐
2. Located indoors and in a vertical position. Protected from freezing temperatures. ☐
3. Proper clearances from combustible surfaces maintained and not installed directly on a carpeted floor. ☐
4. Provisions made to protect the area from water damage. Metal drain pan installed and piped to an adequate drain. ☐
5. Installation area free of corrosive elements and flammable material. ☐
6. Sufficient room to service the water heater. ☐

Gas Supply and Piping

1. Gas supply is the same type as listed on the water heater data plate. ☐
2. Gas line equipped with shut-off valve, union and dirt leg ☐
3. Approved pipe joint compound used. ☐
4. Adequate pipe size and of approved material. ☐
5. Chloride-free soap and water solution or other approved means used to check all connections and fittings for possible gas leaks. ☐

Vent Pipe System

1. Vent pipe and fittings of approved material. ☐
2. Acceptable size, length and number of elbows on exhaust vent system. ☐
3. Installed in accordance with prevailing provisions of local codes, or in the absence of such, the latest edition of **"National Fuel Gas Code" ANSI Z223.1 (NFPA 54)**. ☐
4. Horizontal piping slopes at an upward pitch of 1/8 in. rise per 4 ft. away from the water heater. ☐
5. Not obstructed in any way. ☐

Check Here

Vent Termination

Horizontal

1. 12 in. min. above grade/snow level. ☐
2. Away from corners, other vents, windows etc. ☐

Vertical

1. Exhaust vent termination 18 in. min. above roof/snow level. ☐

Water System Piping

1. Temperature and Pressure relief valve properly installed with a discharge line run to an open drain and protected from freezing. ☐
2. All piping properly installed and free of leaks. ☐
3. Heater completely filled with water. ☐
4. Closed system pressure build-up precautions installed. ☐

Electrical Connections

1. Unit connected to a dedicated 120V electrical supply. ☐
2. Proper polarity. ☐
3. Water heater properly grounded. ☐
4. Installed in accordance with prevailing provisions of local codes, or in the absence of such, the latest edition of **"National Electrical Code" (NFPA 70)"**. ☐

After all actions on checklist are checked/ completed, read the Lighting Instructions and proceed with lighting the heater.

LIGHTING INSTRUCTIONS

Read and understand these directions thoroughly before attempting to operate the water heater. Make sure the burner viewport is not missing or damaged. Make sure the tank is completely filled with water before operating the water heater. The gas control valve/thermostat has an “On/Off Switch” and must be turned on before the water heater is operational. Check the label on the front of the water heater near the gas control valve/thermostat for the correct gas. Do not start this water heater with any gas other than the one listed on the label. If you have any questions or doubts, consult the gas supplier or gas utility company. The following Lighting Instruction label appears on the front of the water heater.

This heater is equipped with a Honeywell gas control/thermostat and a hot-surface igniter. This control is a combination gas valve, thermostat and ignition controller for use on this power vented water heater. The valve contains a micro-controller that supervises the ignition sequence and monitors the temperature settings and operation of the heater. The controller also monitors the flammable vapor safety features of this heater.

This heater is equipped with a hot-surface ignition system that automatically ignites the burner. Do not attempt to light this heater manually with a match or flame-producing device.

FOR YOUR SAFETY READ BEFORE LIGHTING

WARNING: If you do not follow these instructions exactly, a fire or explosion may result causing property damage, personal injury or loss of life.

FLAMMABLE

BEFORE OPERATING: ENTIRE SYSTEM MUST BE FILLED WITH WATER AND AIR PURGED FROM ALL LINES.

A. This appliance does not have a pilot. It is equipped with an ignition device which automatically lights the burner. **Do NOT try to light the burner by hand.**

B. BEFORE OPERATING smell all around the appliance area for gas. Be sure to smell next to the floor because some gas is heavier than air and will settle on the floor.
WHAT TO DO IF YOU SMELL GAS:
- Do not try to light any appliance.
- Do not touch any electric switch; Do not use any phone in your building.
- Immediately call your gas supplier from a neighbor's phone. Follow the gas suppliers instructions.
- If you cannot reach your gas supplier, call the fire department.

C. Use only your hand to turn the gas control buttons. Never use tools. If the control buttons will not turn, don't try to repair them, call a qualified service technician. Force or attempted repair may result in a fire or explosion.

D. Do not use this appliance if any part has been under water. Immediately contact a qualified installer or service agency to replace a flooded water heater. Do not attempt to repair the unit. It must be replaced!

OPERATING INSTRUCTIONS

1. STOP! Read the safety information above on this label.
2. Turn off all electric power to the appliance.
3. Turn the thermostat counter-clockwise to the lowest setting.
4. Set the switch on the control to the “OFF” position.
5. Do not attempt to light manually.
6. Wait five (5) minutes to clear out any gas. If you then smell gas, STOP! Follow “B” in the safety information above on this label. If you don't smell gas, go the next step.

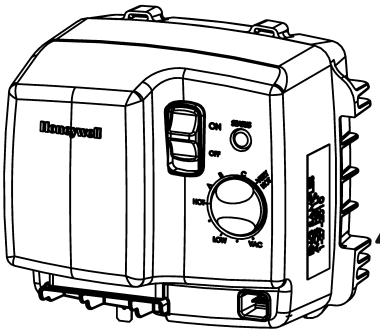

7. Turn on all electric power to the appliance.
8. Set the switch on the control to the “ON” position.
9. Turn thermostat to desired setting.

DANGER Hotter water increases the risk of scald injury. Consult the instruction manual before changing temperature.

10. If the appliance will not operate, follow the instructions “To Turn Off Gas To Appliance” and call your service technician or gas supplier.

TO TURN OFF GAS TO APPLIANCE

1. Turn the thermostat counter-clockwise to the lowest setting.
2. Set the gas control switch to the “OFF” position.
3. Turn off electrical power to the appliance if service is to be performed.

323546-000

OPERATING THE TEMPERATURE CONTROL SYSTEM

It is recommended that lower water temperatures be used to avoid the risk of scalding. It is further recommended, in all cases, that the water temperature be set for the lowest temperature which satisfies your hot-water needs. This will also provide the most energy efficient operation of the water heater.
Short repeated heating cycles caused by small hot-water uses can cause a temperature increase of the hot water by 20F° higher than the heater's temperature settings. If you experience this type of use you should consider using lower temperature settings to reduce scald hazards.

Should overheating occur or the gas supply fails to shut off, turn off the main manual gas shut off valve to the appliance (see Figure 1).

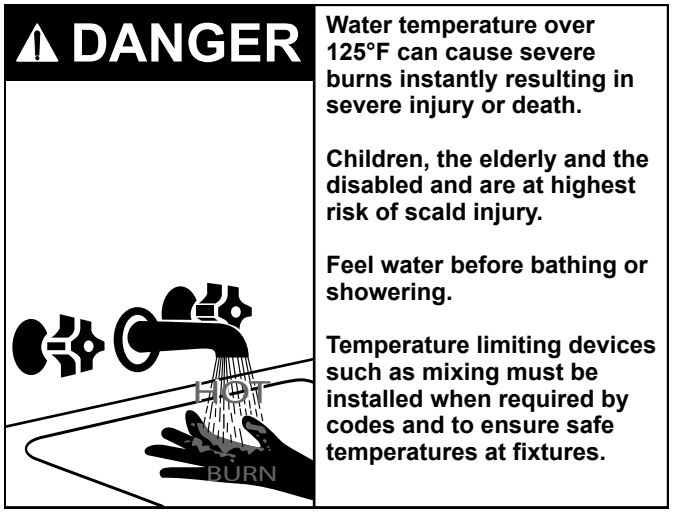

HOT WATER CAN SCALD:
Water heaters are intended to produce hot water. Water heated to a temperature which will satisfy space heating, clothes washing, dish washing, and other sanitizing needs can scald and permanently injure you upon contact. Some people are more likely to be permanently injured by hot water than others. These include the elderly, children, the infirm or physically/mentally handicapped. If anyone using hot water from this heater fits into one of these groups or if there is a local code or state law requiring certain temperature water at the hot-water tap, then you must take special precautions. In addition to using the lowest possible temperature setting that satisfies your hot-water needs, a means such as a mixing valve, should be used at the hot-water taps used by these people or at the water heater. Mixing valves are available at plumbing supply or hardware stores (see Figure 8 & Figure 9). Follow manufacturer's instructions for installation of the valves. Before changing the factory setting on the thermostat, in this manual, see Table 4.

The water heater should be located in an area where the general public does not have access. If a suitable area is not available, a cover should be installed over the thermostat to prevent tampering.

This water heater is equipped with an adjustable thermostat to control water temperature (see Figure 48). Hot water temperatures required for automatic dishwasher and laundry use can cause scald burns resulting in serious personal injury and/or death. The temperature at which injury occurs varies with the person's age and time of the exposure. The slower response time of children, aged or disabled persons increases the hazards to them. Never allow small children to use a hot-water tap, or to draw their own bath water. Never leave a child or disabled person unattended in a bathtub or shower.

The hot setting shown on the dial is approximately 120°F. This is a good starting point to set the temperature.

Setting the water heater temperature at 120°F will reduce the risk of scalds. Some states require settings at specific lower temperatures.

The thermostat settings on the gas control valve are shown in Figure 48.

The water temperature setting was factory set at the lowest (VAC) temperature setting.

GAS CONTROL VALVE/THERMOSTAT

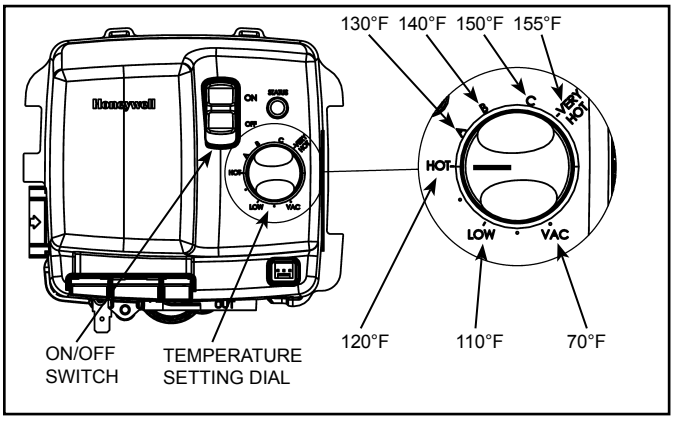

Figure 48.

Temperature Dial Setting	Approximate Temperature °F	Time to induce a 2nd and 3rd Degree burn to adult skin
VERY HOT	155	Less than 1 second
C	150	About 1.5 seconds
B	140	Less than 5 seconds
A	130	More than 30 seconds
HOT	120	More than 5 minutes
LOW	110	Normal shower temp
VAC	70	N/A

Table 4.

Note: The temperatures indicated are approximates. The actual temperature of the heated water may vary.
The Vacation Setting (VAC) sets the controller at approximately 70°F. This setting is recommended when the water heater is not in use for a long period of time. This effectively turns the controller temperature setting down to a temperature that prevents the water in the water heater from freezing while still conserving energy.

FOR YOUR INFORMATION

START UP CONDITIONS

Condensate

Whenever the water heater is filled with cold water, some condensate will form while the burner is ON. A water heater may appear to be leaking when in fact the water is condensate. This usually happens when:

a. A new water heater is filled with cold water for the first time.
b. Burning gas produces water vapor in water heaters, particularly high efficiency models where flue temperatures are lower.
c. Large amounts of hot water are used in a short time and the refill water in the tank is very cold.

Moisture from the products of combustion condense on the cooler tank surfaces and form drops of water which may fall onto the burner or other hot surfaces to produce a “sizzling” or “frying” noise.

Because of the suddenness and amount of water, condensate water maybe diagnosed as a “tank leak”. After the water in the tank warms up (about 1-2 hours), the condition should disappear.

Do not assume the water heater is leaking until there has been enough time for the water in the tank to warm up.

An undersized water heater will cause more condensation. The water heater must be sized properly to meet the family’s demands for hot water including dishwashers, washing machines and shower heads.

Excessive condensate maybe noticed during the winter and early spring months when incoming water temperatures are at their lowest.

Good venting is essential for a gas fired water heater to operate properly as well as to carry away products of combustion and water vapor (see also “Condensate” section).

Thermal expansion

See “Thermal Expansion” section elsewhere in this manual.

CAUTION

Property Damage Hazard

- Avoid water heater damage.
- Install thermal expansion tank if necessary.
- Do not apply heat to cold water inlet.
- Contact qualified installer or service agency.

A properly-sized thermal expansion tank should be installed on all closed systems to control the harmful effects of thermal expansion. Contact a plumbing service agency or your retail supplier regarding the installation of a thermal expansion tank.

Closed water systems

See “Closed Water Systems” section elsewhere in this manual.

Smoke/odor

It is not uncommon to experience a small amount of smoke and odor during the initial start-up. This is due to burning off of oil from metal parts, and will disappear in a short while.

Strange sounds

Possible noises due to expansion and contraction of some metal parts during periods of heat-up and cool-down do not necessarily represent harmful or dangerous conditions. Condensation causes sizzling and popping within the burner area during heating and cooling periods and should be considered normal. See “Condensate” section in this manual.

OPERATIONAL CONDITIONS

Smelly water

Each water heater contains at least one anode rod for corrosion protection of the tank. Certain water conditions will cause a reaction between this rod and the water. The most common complaint associated with the anode rod is one of a “rotten egg smell” in the hot water. The smell is a result of four factors which must all be present for the odor to develop:

a. A concentration of sulfate in the supply water.
b. Little or no dissolved oxygen in the water.
c. A sulfate reducing bacteria which has accumulated within the water heater (this harmless bacteria is nontoxic to humans).
d. An excess of active hydrogen in the tank. This is caused by the corrosion protective action of the anode.

Smelly water may be eliminated or reduced in some water heater models by replacing the anode(s) with one of less active material, and then chlorinating the water heater tank and all water lines. Contact the local water heater supplier or service agency for further information concerning an Anode Replacement Kit and this chlorination treatment.

If the smelly water persists after the anode replacement and chlorination treatment, we can only suggest that chlorination or aeration of the water supply be considered to eliminate the water problem.

Do not remove the anode leaving the tank unprotected. By doing so, all warranty on the water heater tank is voided.

“AIR” IN HOT-WATER FAUCETS

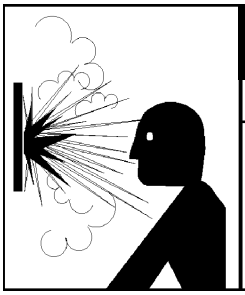

⚠ WARNING

Explosion Hazard

- Flammable hydrogen gases may be present.
- Keep all ignition sources away from faucet when turning on hot water.

HYDROGEN GAS: Hydrogen gas can be produced in a hot-water system that has not been used for a long period of time (generally two weeks or more). Hydrogen gas is extremely flammable and explosive. To prevent the possibility of injury under these conditions, it is recommended that the hot-water faucet, located farthest away, be opened for several minutes before any electrical appliances which are connected to the hot-water system are used (such as a dishwasher or washing machine). If hydrogen gas is present, there will probably be an unusual sound similar to air escaping through the pipe as the hot-water faucet is opened. There must be no smoking or open flame near the faucet at the time it is open.

PERIODIC MAINTENANCE

GENERAL UPKEEP

Make it a habit to look around the heater, the vent piping, and the hot and cold water pipes. Do not allow any material to be piled up against the heater. Do not place any object on top of the vent pipes.

Every 3 - 6 months or as necessary:

- Clean lint from blower, top of heater.

Once per year:

- Inspect the Vent System.
- Burner Operation and Inspection.
- Combustion Chamber for scaling or sooting.
- Temperature-Pressure Relief Valve Test.
- Anode Rod Inspection.
- Flush a pail of water from the heater drain valve, once per year.

If any deficiencies or abnormalities are encountered during these inspections call a qualified service technician.

VENTING SYSTEM INSPECTION

⚠ WARNING

Breathing Hazard - Carbon Monoxide Gas

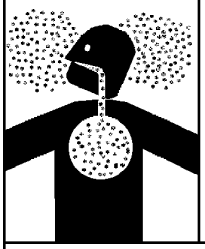

- Flue gases may escape if vent pipe is not properly connected.
- Be alert for obstructed, sooted or deteriorated vent system to avoid serious injury or death.
- Do not store corrosive chemicals in vicinity of water heater.
- Chemical corrosion of flue and vent system can cause serious injury or death.
- Analyze the entire vent system to make sure that condensate will not become trapped in a section of vent pipe and therefore reduce the open cross sectional area of the vent.

Breathing carbon monoxide can cause brain damage or death. Always read and understand instruction manual.

At least once a year a visual inspection should be made of the venting system. You should look for:

- Obstructions which could cause improper venting. The combustion, dilution and ventilation air flow must not be obstructed.
- Damage or deterioration which could cause improper venting or leakage of combustion products.

Be sure the vent piping is properly connected to prevent escape of dangerous flue gasses which could cause deadly asphyxiation.

Obstructions and deteriorated vent systems may present serious health risk or asphyxiation.

Chemical vapor corrosion of the flue and vent system may occur if air for combustion contains certain chemical vapors. Spray can propellants, cleaning solvents, refrigerator and air conditioner refrigerants, swimming pool chemicals, calcium and sodium chloride, waxes, bleach and process chemicals are typical compounds which are potentially corrosive.

If after inspection of the vent system you found sooting or deterioration, something is wrong. Call the local gas utility to correct the problem and clean or replace the flue and venting before resuming operation of the water heater.

BLOWER MAINTENANCE

Inspect the top of the heater and around the ventilation openings of the blower motor and the rear blower dilution air intakes for any lint and dust that may have accumulated. Depending on the location of the heater, significant quantities of lint may accumulate. The lint may obstruct the free flow of air to the motor, and cause the motor and blower to run hotter than normal (see Figure 49).

To clean any dust and lint, proceed as follows:

1. Unplug the water heater.
2. Using a nylon bristled paint or toothbrush, brush away any lint. Pick up the lint with a cloth.

Better results can be achieved by using the small brush on a vacuum cleaner to remove all lint and dust which have accumulated on top of the heater, the louvres of the air intake snorkel, the motor ventilation openings and the rear blower dilution air intakes.

Important: Do not insert any foreign object into the ventilation openings of the motor.

CLEANING THE BLOWER.

In dusty and contaminated air conditions, the interior of the blower and the blower wheel may require periodic cleaning. This is often indicated by nuisance failures of the air pressure switch or the high limit temperature control. A collection of dust or debris on the rear blower dilution air intakes can also indicate reduced blower capacity. To clean the inside of the blower assembly and the blower wheel requires the removal of the blower/motor from the mounting plate located on the top of the heater. Tools required include an 11/32” nut driver, small (1”) paint brush, toothbrush and vacuum cleaner.

1. Turn the thermostat on the gas control to the lowest setting. If the heater is running, wait for it to shut down (see Figure 48).
2. Turn the gas control switch to the “OFF” position.
3. Disconnect the electrical power to the water heater from the wall outlet.
4. Disconnect the vent piping from the top of the blower. Loosen the lower gear clamp that holds the rubber coupling to the blower (see Figure 49).
5. Remove and retain the (4) 11/32” nuts located on the back of the blower with the nutdriver (see Figure 42 & Figure 49).
6. Holding the blower motor and the blower housing, pull the assembly forward to disengage it from the mounting plate. The blower will still be connected to the junction box so exercise care not to stress the wiring.

7. Accessing the blower wheel through the outlet, use the paint brush to brush off the outer edge of the blower wheel to dislodge the dirt stuck on the blades and the inside of the housing. Rotate the wheel until all blades are clear. Note: The wheel is a balanced component. Do not bend, dent or distort the blades as this can upset the wheel balance and affect the blower operation. Vacuum out the loosened dirt.
8. Accessing the inside of the blower wheel through the rear of the housing, gently brush off the inside of the blades using the toothbrush. Again, take care not to distort the blades. Rotate the wheel until all blades are cleaned and vacuum the debris. Do not remove any of the balancing chips attached to the blades.
9. Inspect the flue collector hood (still attached to the heater) and vacuum out the dust and debris that may have accumulated.
10. With all parts cleaned and the blower wheel turning freely, reinstall the blower to the mounting plate aligning the (4) studs and pushing tight against the mounting plate.
11. Reinstall the (4) 11/32" nuts and tighten securely. All (4) nuts must be in place and secure to safely operate the blower.
12. Reattach the vent piping and coupling to the top of the blower, tighten the bottom gear clamp and ensure the piping is secure.
13. With all components clean and secure, reconnect the electrical power to the heater.
14. Reset the thermostat to the desired temperature setting and turn the gas control switch back to the "ON" position. Note: If the water in the heater is hot, the unit will wait to operate until there is a need for more hot water.

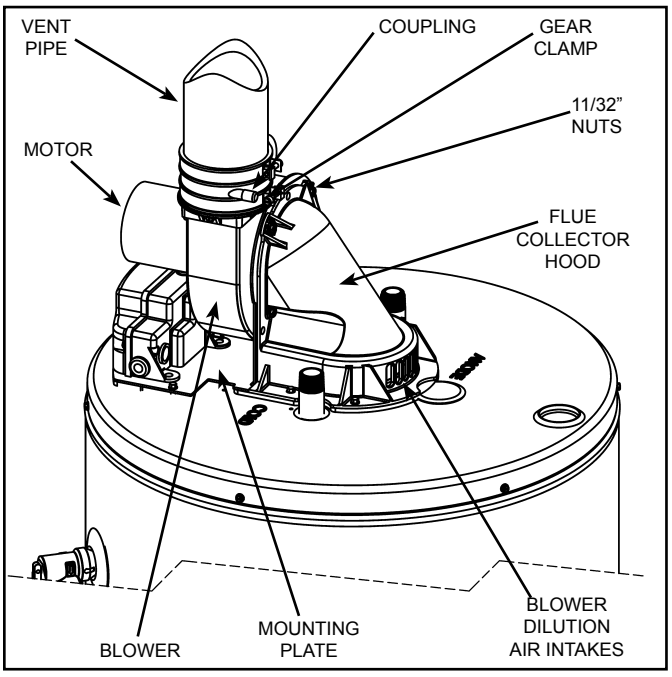

Figure 49.

BURNER OPERATION AND INSPECTION

Flood damage to a water heater may not be readily visible or immediately detectable. However, over a period of time a flooded water heater will create dangerous conditions which can cause death, serious bodily injury, or property damage. Contact a qualified installer or service agency to replace a flooded water heater. Do not attempt to repair the unit! It must be replaced!

At least once a year a visual inspection should be made of the main burner and the hot surface igniter assembly for proper flame characteristics and ignition sequences. This can be done by removing the outer door and viewing the main burner operation through the viewport on the inner door (see Figure 50). The main burner should provide complete combustion of gas, ignite rapidly, give reasonably quiet operation, and cause no excessive flame lifting from the burner ports. If the proper flame characteristics are not evident (see Figure 51), make sure that the flow of combustion and ventilation air is not blocked.

You should also check for sooting. Soot is not normal and will impair proper combustion. A visual inspection of the main burner and hot surface igniter should also be done at least once a year (see Figure 50).

Soot build-up indicates a problem that requires correction before further use. Turn "OFF" gas to water heater by unplugging the power cord and leave off until repairs are made. Failure to correct the cause of the sooting can result in a fire causing death, serious injury, or property damage.

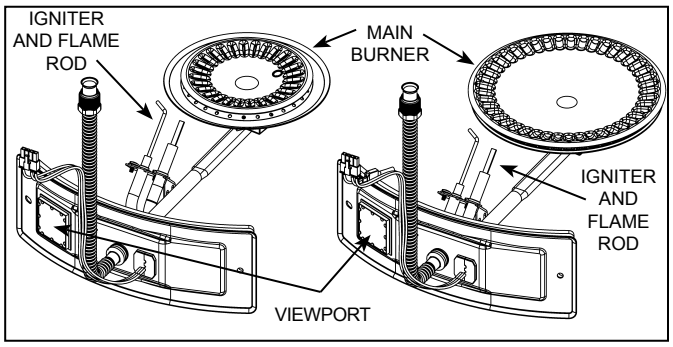

Figure 50.

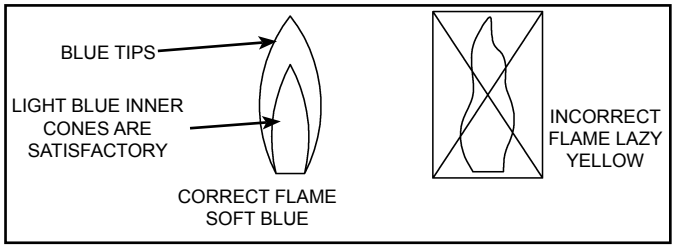

Figure 51.

COMBUSTION CHAMBER AND BURNER CLEANING

In the event your burner or burner air openings require cleaning, Call your service agency to remove and clean the burner and correct the problem that required the burner to be cleaned.

HOUSEKEEPING

⚠ DANGER

Fire and Explosion Hazard

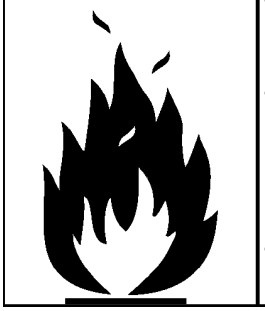

- Do not obstruct combustion air openings at the rear of the water heater.
- Do not use or store flammable vapor products such as gasoline, solvents or adhesives in the same room or area near water heater or other appliance.
- Can cause serious injury or death.

INSTALLED IN SUITABLE AREA:
To ensure sufficient ventilation and combustion air supply, proper clearances from the water heater must be maintained. See “Locating the New Water Heater” section. Combustible materials such as clothing, cleaning materials, or flammable liquids, etc. must not be placed against or adjacent to the water heater which can cause a fire.

ANODE ROD INSPECTION

Each water heater contains at least one anode rod, which will slowly deplete (due to electrolysis) prolonging the life of the water heater by protecting the glass-lined tank from corrosion. Adverse water quality, hotter water temperatures, high hot water usage, hydronic heating devices and water softening methods can increase the rate of anode rod depletion. Once the anode rod is depleted, the tank will start to corrode eventually developing a leak.

Certain water conditions will cause a reaction between the anode rod and the water. The most common complaint associated with the anode rod is a “rotten egg smell” produced from the presence of hydrogen sulfide gas dissolved in the water. **Important:** Do not remove this anode rod permanently as it will void any warranties. A special anode rod may be available if water odor or discoloration occurs. **Note:** This anode rod may reduce but not eliminate water odor problems. The water supply system may require special filtration equipment from a water conditioning company to successfully eliminate all water odor problems.

Artificially softened water can be exceedingly corrosive because the process substitutes sodium ions for magnesium and calcium ions. The use of a excessively soft water may decrease the life of the water heater tank.

The anode rod should be inspected after a maximum of three years and annually thereafter until the condition of the anode rod dictates its replacement. **Note:** Artificially softened water requires the anode rod to be inspected annually.

The following are typical (but not all) signs of a depleted anode rod:

- The majority of the anode rod’s diameter is less than 3/8”.
- Significant sections of the support wire (approx. 1/3 or more of the anode rod’s length) are visible (see Figure 52).

If the anode rod show signs of either or both it should be replaced. **Note:** Whether re-installing or replacing the anode rod, check for any leaks and immediately correct if found.

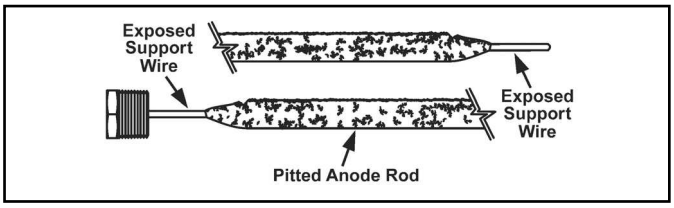

Figure 52.

ANODE ROD

Important: Use only factory authorized replacement parts. If you lack the necessary skills to properly perform the installation, you should not proceed, but get help from a qualified service technician.

- Tools required:
- Ratchet with 1-1/16” Socket
- Pliers
- Teflon® Tape or an approved pipe sealant

Removing Anode Rod:

1. Set the gas control valve/thermostat to its lowest setting by turning the knob counter-clockwise to the VAC point (see Figure 48). If the water heater is running, wait for it to shut down.
2. Turn gas control switch to the “OFF” position.
3. Disconnect the electrical power to the water heater from the wall outlet.
4. Shut off the incoming water supply to the water heater and open a nearby hot-water faucet to depressurize the water tank.
5. Connect a hose to the drain valve and terminate it to adequate drain or to the exterior of the building. Open the drain valve and allow at least 5 gallons of water to drain from the tank. Close drain and remove hose.
6. Remove the anode cap on top of the heater and remove just enough insulation so you can access to the anode head (see Figure 53). Keep the anode cap in a safe place for reinstallation later.
7. Remove the anode rod by using a ratchet and a 1-1/16” socket turning counter-clockwise (see Figure 53).

Installing Anode Rod:

1. Use Teflon® tape or an approved pipe sealant on threads of the new anode rod.
2. Place the anode rod in the spud (top of the tank) and turn clockwise until the threads are hand tight. Using a ratchet and 1-1/16" socket tighten down water tight.
3. Open a nearby hot-water faucet to purge air from the water line. Open the incoming water supply and fill water heater tank completely (Note: To assure the water heater tank is full, keep the hot-water faucet open for 3 minutes after a constant flow of water is obtained).
4. Turning off the hot-water faucet, check for water leaks around anode rod and immediately correct any if found.
5. Reinstall the insulation and anode cap which were removed in step 6 of removal instructions.
6. With all components clean and secure, reconnect the electric power to the heater.
7. Reset the thermostat to the desired temperature setting and turn the gas control switch back to the "ON" position (see Figure 48).

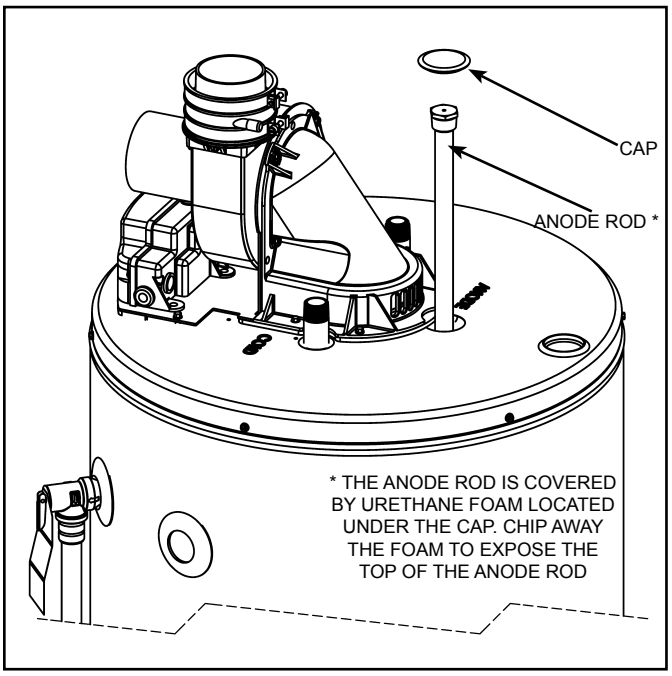

Figure 53.

TEMPERATURE-PRESSURE RELIEF VALVE TEST

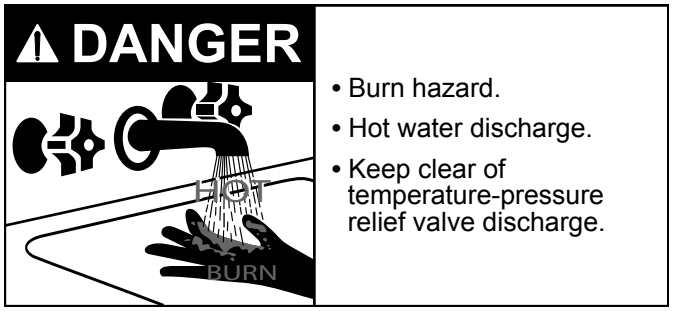

It is recommended that the temperature-pressure relief valve be checked to ensure it is in operating condition at least once a year.

When checking the temperature-pressure relief valve operation, make sure that (1) no one is in front of or around the outlet of the T&P valve discharge line, and (2) that water discharge will not cause any property damage, as water may be extremely hot. Use care when operating valve as the valve may be hot.

To check the relief valve, lift lever at the end of valve several times (see Figure 54). The valve should seat properly and operate freely.

If after manually operating the valve, it fails to completely reset and continues to release water, immediately close the cold-water inlet to the water heater and drain the water heater, see "Draining and Flushing" section. Replace the T&P valve with a properly rated/sized new one, see "Temperature-Pressure Relief Valve" for instructions on replacement.

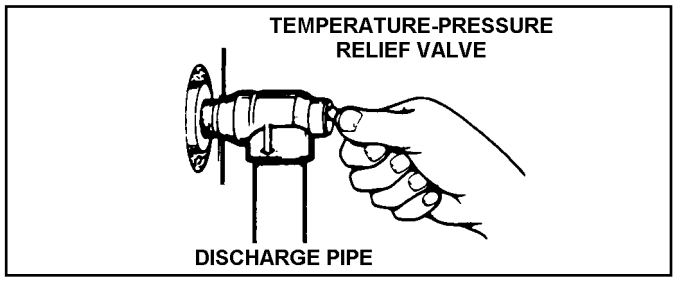

Figure 54.

If the Temperature-Pressure Relief Valve on the water heater weeps or discharges periodically, it may be due to thermal expansion.

Note: Excessive water pressure is the most common cause of temperature-pressure relief valve leakage. Excessive water system pressure is most often caused by "thermal expansion" in a "closed system." See "Closed Water Systems" and "Thermal Expansion" sections of this manual. The T&P valve is not intended for the constant relief of thermal expansion.

Temperature-pressure relief valve leakage due to pressure build up in a closed system that does not have a thermal expansion tank installed is not covered under the Limited Warranty. Thermal expansion tanks must be installed on all closed water systems.

⚠ WARNING

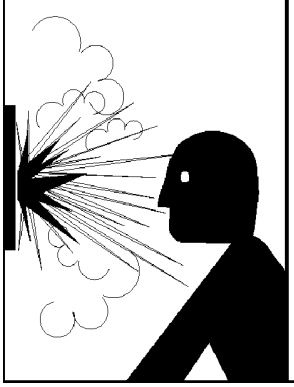

Explosion Hazard

- Temperature-pressure relief valve must comply with ANSI Z21.22-CSA4.4 and ASME code.
- Properly sized temperature-pressure relief valve must be installed in opening provided.
- Do not plug, block, or cap the discharge line.
- Failure to follow this warning can result in excessive tank pressure, serious injury or death.

DRAINING AND FLUSHING

Periodic draining and cleaning of sediment from the tank maybe necessary. It is recommended that the tank be drained and flushed every 6 months to remove sediment which may build up during operation. The water heater should be drained if being shut down during freezing temperatures. See “Typical Installation” section in this manual for location of the water heater components described below.

⚠ DANGER

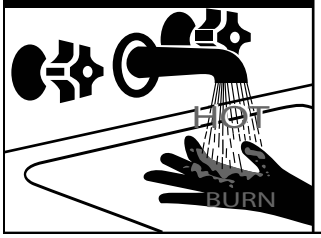

- Burn hazard.
- Hot water discharge.
- Keep hands clear of drain valve discharge.

To drain the water heater storage tank:

1. Turn “OFF” the electrical supply to the water heater.
2. Turn “OFF” the gas supply at the Main Gas shut-off Valve if the water heater is going to be shut down for an extended period.
3. CLOSE the cold-water inlet valve to the water heater.
4. OPEN a nearby hot-water faucet and leave open to allow for draining.
5. Connect a hose to the drain valve and terminate to an adequate drain.

Note: If the water heater is going to be shut down and drained for an extended period, the drain valve should be left open with hose connected allowing water to terminate to an adequate drain.

6. Close the water heater drain valve when all water in the storage tank has drained.
7. Follow instructions in the “Filling the Water Heater” section.
8. Turn “ON” the gas supply at the main gas shut-off valve.
9. Follow the lighting instructions on the label or see “Lighting Instruction” to restart the water heater.

To flush the water heater storage tank:

1. Turn “OFF” the electrical supply to the water heater.
2. Ensure the cold-water inlet valve is open.
3. Connect a hose to the drain valve and terminate it to an adequate drain.
4. Ensure the drain hose is secured before and during the entire flushing procedure. Flushing is performed with system water pressure applied to the water heater.
5. Open the water heater drain valve to flush the storage tank. Caution: Water will be hot.
6. Flush the water heater storage tank to remove sediment and allow the water to flow until it runs clean.
7. Close the water heater drain valve when flushing is completed.
8. Remove the drain hose.
9. Ensure the heater is full of water.
10. Turn “ON” electrical supply to place water heater back in operation and follow the lighting instructions.
11. Allow the water heater to complete several heating cycles to ensure it is operating properly.

Caution: Do not turn on power to the water heater unless the tank is full. Open a hot-water faucet and allow the water to run until the air is purged and the water flows uninterrupted from the faucet.

Important: When operating a cold tank, condensation can occur and drip on the burner. This should not be confused with a tank leak.

LEAKAGE CHECKPOINTS

SERVICE

If a condition persists or you are uncertain about the operation of the water heater contact a service agency. Use this guide to check a “leaking” water heater. Many suspected “leakers” are not leaking tanks. Often the source of the water can be found and corrected.

If you are not thoroughly familiar with gas codes, your water heater and safety practices, contact your gas supplier or qualified installer to check the water heater.

Ensure the venting is properly attached and secured.

Never use this water heater unless it is completely filled with water. To prevent damage to the tank, the tank must be filled with water. Water must flow from the hot-water faucet before turning “ON” gas to the water heater.

A. Water at the blower assembly is water vapor which has condensed out of the combustion products. This is caused by a problem in the vent. A drainage port is included at the vent pipe connection. Contact the gas utility.
B. *Condensation may be seen on pipes in humid weather or pipe connections may be leaking.
C. *The anode rod fitting may be leaking.
D. Small amounts of water from temperature-pressure relief valve may be due to thermal expansion or high water pressure in your area.
E. *The temperature-pressure relief valve may be leaking at the tank fitting.
F. Water from a drain valve may be due to the valve being slightly opened.
G. *The drain valve may be leaking at the tank fitting.
H. Combustion products contain water vapor which can condense on the cooler surfaces of the tank. Droplets form and drip onto the burner. This is common at the time of start-up after installation and when incoming water is cold.
I. Water in the water heater bottom may be from condensation, loose connections, or the relief valve. DO NOT replace the water heater until a full inspection of all possible water sources is made and necessary corrective steps taken.

Leakage from other appliances, water lines, or ground seepage should also be checked.

* To check where threaded portion enters tank, insert cotton swab between jacket opening and fitting. If cotton is wet, follow “Draining” instructions in the “Periodic Maintenance” section and then remove fitting. Put pipe dope or Teflon tape on the threads and replace. Then follow “Filling the Water Heater” instructions in the “Installing the New Water Heater” section.

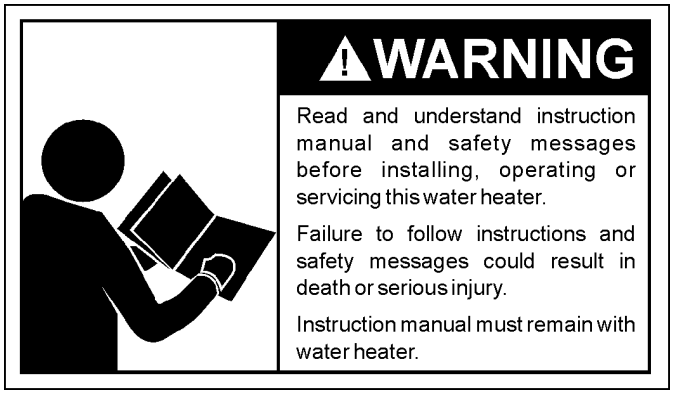

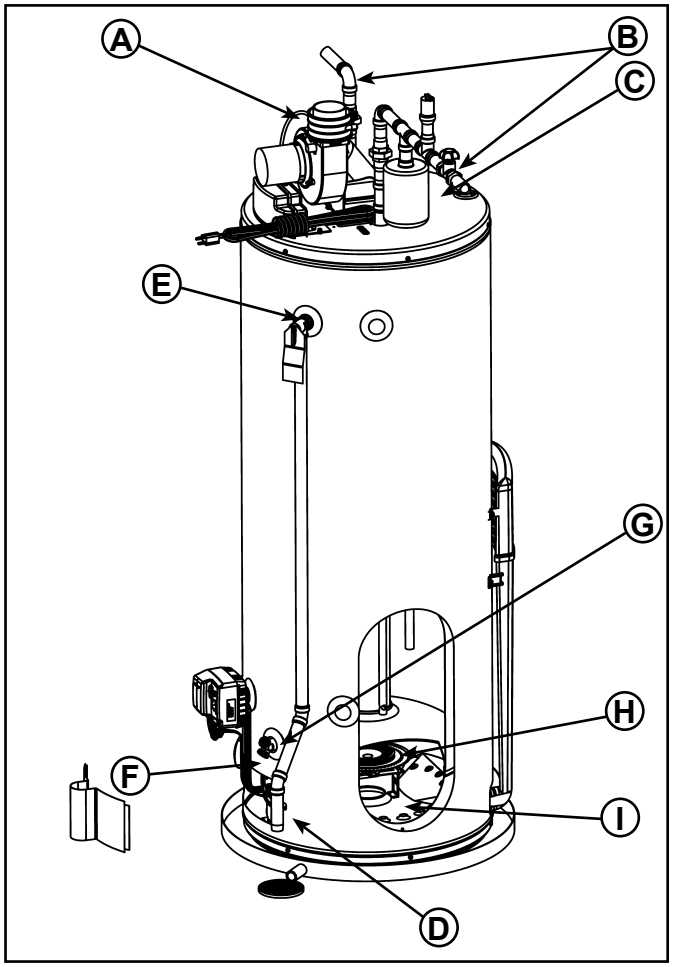

Figure 55.

REFERENCE PARTS LISTING

Replacement parts may be ordered through your plumber or the local distributor. When ordering replacement parts, always have the following information ready:

1. Model, Serial and Product number
2. Type of gas
3. Item number
4. Parts description

1. Vent Termination Elbow with Rodent Screen
2. **Vent Pipe
3. **Vent Pipe Coupling (if required)
4. **Vent Pipe Elbow (long radius)
5. Blower High Limit Switch (see Figure 61)
6. T&P Valve
7. Cold-Water Inlet Nipple/Diptube
8. Baffle Assembly
9. ** Discharge Pipe
10. Gas Control Valve/Thermostat (Honeywell)
11. Gas Valve Electronic Control Module And Cover (Honeywell)
12. Drain Valve
13. Outer Gas Door
14. Manifold Door Assembly (behind outer door) (see Figure 58 & Figure 59)
15. **Floor Drain
16. **Metal Drain Pan
17. Flammable Vapor Sensor (under cover) (see Figure 60)
18. Combo Heating System Return Inlet (Optional)
19. Air Inlet Snorkel
20. Combo Heating System Supply Outlet (Optional)
21. Blower with Power Cord (see also Figure 61)
22. Air Switch (inside box) (see Figure 61)
23. Junction Box (see Figure 61)
24. Junction Box Cover (see Figure 61)
25. Air Tubing (see Figure 61)
26. Rubber Coupling (see also Figure 61)
27. Gear Clamp (see also Figure 61)
28. Flue Collector
29. Hot-Water Outlet Nipple
30. Anode (under cap)
32. Flexible Manifold Tube (see Figure 58 & Figure 59)
33. Viewport (see Figure 58 & Figure 59)
34. Flame Sensor Rod (see Figure 58 & Figure 59)
35. Gas Orifice (see Figure 58 & Figure 59)
36. Sheet Metal Burner (see Figure 58 & Figure 59)
37. Gas Manifold (see Figure 58 & Figure 59)
38. Hot-Surface Igniter (see Figure 58 & Figure 59)
39. Manifold Door Gasket (see Figure 58 & Figure 59)
40. Manifold Door (see Figure 58 & Figure 59)
41. Two Piece Grommet With Clip (Figure 58 & Figure 59)

** parts not supplied with the water heater

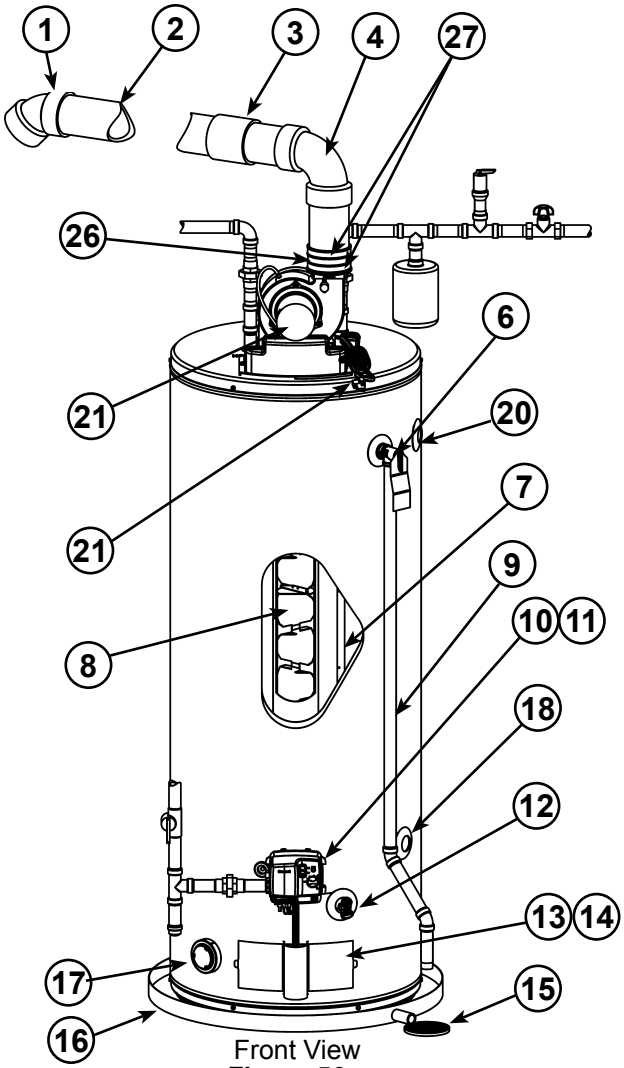

Front View
Figure 56.

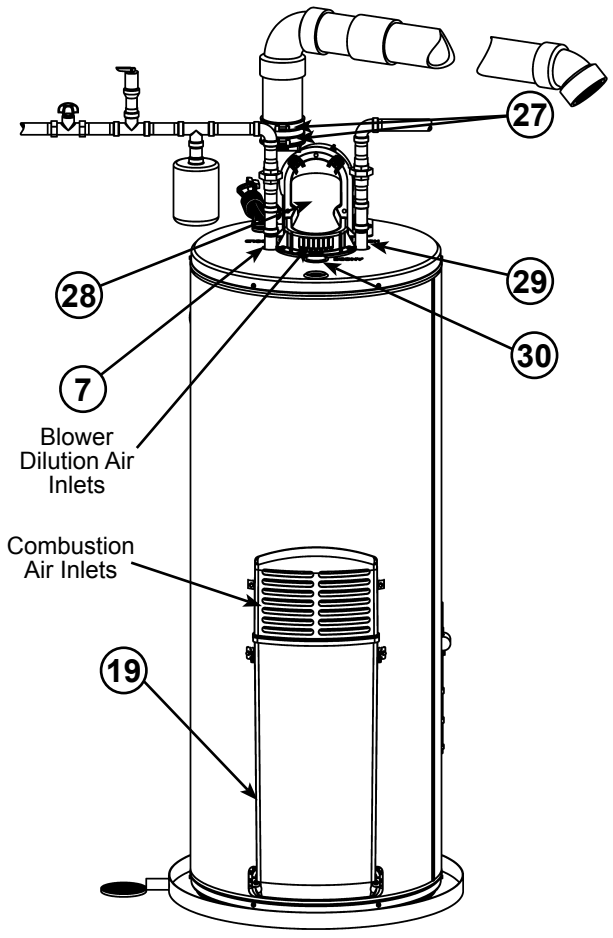

Rear View
Figure 57.

Natural gas and Propane main burner with igniter assembly for 40k to 50k Btu/hr models

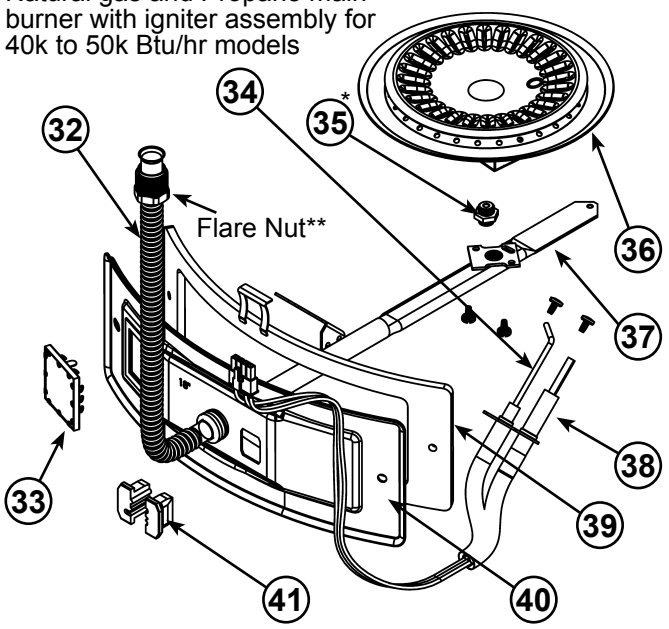

Figure 58.

Natural gas and Propane main burner with igniter assembly for 60k to 75k Btu/hr models

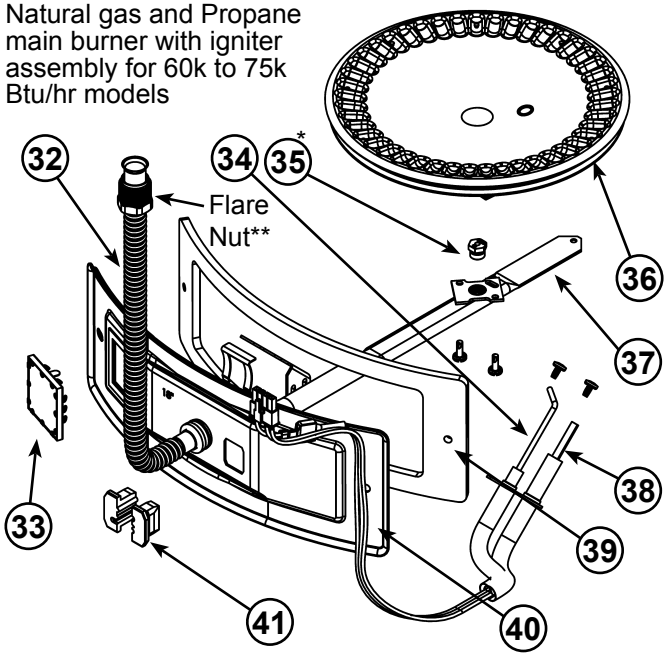

Figure 59.

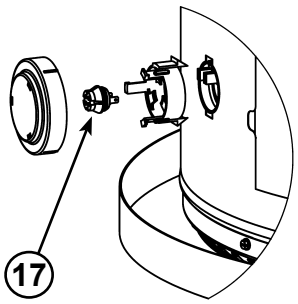

Figure 60.

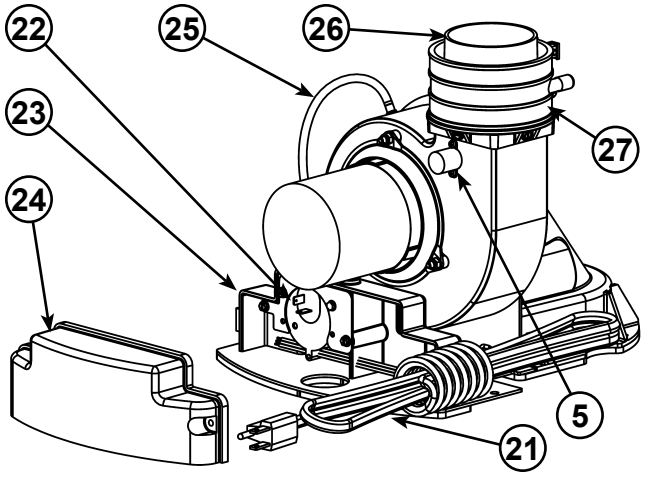

Figure 61.

Notes: * Natural gas models have Right-hand thread, Propane models have Left-hand thread.

** For Natural gas models the Flare Nut has Right-hand thread. For Propane models the Flare Nut has Left-hand thread.

TROUBLESHOOTING GUIDELINES

These guidelines should be utilized by a qualified service agent.

PROBLEM	POSSIBLE CAUSE(S)	CORRECTIVE ACTION
BURNER FLAME TOO HIGH	1. Air inlets blocked 2. Insufficient secondary air 3. Orifice too large	1. Unblock inlet air openings 2. Provide ventilation to water heater 3. Replace with correct orifice
FLAME BURNS AT ORIFICE	1. Low gas pressure 2. Defective gas control valve/thermostat	1. Check with gas utility company 2. Replace gas control valve/thermostat
INSUFFICIENT HOT WATER	1. Low gas pressure 2. Orifice too small 3. Thermostat set too low 4. Gas control error codes 5. Sediment or lime in tank 6. Water heater too small 7. Wrong piping connections 8. Leaking faucets 9. Wasted hot water 10. Long runs of exposed piping 11. Hot-water piping in outside wall	1. Check with gas utility company 2. Replace with correct orifice (see rating plate) 3. Turn temperature knob to higher setting 4. Refer to gas control error codes 5. Drain/flush-provide water treatment if needed 6. Install adequate heater 7. Correct piping: dip tube must be in cold inlet 8. Repair faucets 9. Advise customer 10. Insulate piping 11. Insulate piping
WATER IS TOO HOT	1. Thermostat is too high 2. Defective gas control valve/thermostat	1. Turn temperature knob to lower setting 2. Replace the gas control valve/ thermostat
SLOW HOT WATER RECOVERY	1. Insufficient air/ flue blockage 2. Low gas pressure 3. Orifice too small 4. Thermostat set too low 5. Heater too small 6. Wrong piping connection 7. Wasted hot water 8. Flue clogged 9. Air inlets blocked	1. Provide ventilation to water heater. Check flue way, flue baffle and burner 2. Check with gas utility company 3. Replace with correct orifice (see rating plate) 4. Turn temperature knob to higher setting 5. Install adequate heater 6. Correct piping-dip tube must be in cold inlet 7. Advise customer 8. Clean flue, locate source and correct 9. Unblock inlet air openings
DRIP FROM RELIEF VALVE	1. Pressure build-up 2. Heater stacking 3. Closed water system 4. Improperly seated valve	1. Use a pressure-reducing valve and relief valve 2. Lower the thermostat setting 3. See thermal expansion section 4. Check Relief valve for proper operation (Do Not plug T&P valve)
GAS CONTROL VALVE/ THERMOSTAT FAILS TO SHUT OFF	1. Defective gas control valve/thermostat	1. Replace gas control valve/thermostat
SMELLY WATER	1. Sulfides in water supply 2. Bacteria in water supply 3. Incompatible anode	1. Chlorination procedure 2. Chlorination procedure 3. Replace with anode appropriate for water conditions

PROBLEM	POSSIBLE CAUSE(S)	CORRECTIVE ACTION
CONDENSATION	1. Filling the new water heater for the first time 2. Moisture from the products of combustion 3. Water dripping from blower assembly 4. Undersized water heater	1. Normal operation: the condensation should disappear after heater warms up 2. Normal operation: the condensation should disappear in time 3. Install condensate hose to drain port on the rubber coupling 4. Install adequate heater
COMBUSTION ODORS	1. Air inlets blocked 2. Insufficient air 3. Flue clogged 4. Heater installed in a confined area 5. House too tight	1. Unblock inlet air openings 2. Provide fresh air ventilation to the water heater 3. Clean, locate source and correct 4. Provide fresh air ventilation to the water heater 5. Provide fresh air ventilation to the water heater
SMOKING AND CARBON FORMATION	1. Air inlets blocked 2. Insufficient air 3. Low gas pressure 4. Orifice too large 5. Flue clogged 6. Defective gas control valve/thermostat 7. Heater installed in a confined area	1. Unblock inlet air openings 2. Provide ventilation to water heater. Check flue way, flue baffle and burner 3. Check with gas utility company 4. Replace with correct orifice (see rating plate) 5. Clean, locate source and correct 6. Replace gas control valve/thermostat 7. Provide fresh air ventilation
UNABLE TO LIGHT THE BURNER	1. Air in gas line 2. Pressure switch 3. Blocked exhaust 4. Wire connection 5. Defective gas control valve/thermostat	1. Purge the air from gas line 2. Check the pressure switch, make sure the pressure switch hose is not kinked 3. Check vent pipe for blockage 4. Check wire connections 5. Replace the gas control valve/ thermostat
SIZZLING, RUMBLING NOISE	1. Scale and sediment 2. Condensation dripping on burner	1. Drain/flush-provide water treatment if needed 2. Refer to “Condensate” section
WATER LEAKAGE	1. Condensation 2. Dripping Temperature & Pressure Relief Valve 3. Drain valve dripping/leaking 4. Tank Leak	1. Refer to “Condensate” section 2. Refer to “Temperature & Pressure Relief Valve” section 3. Back flush to clean- out sediment, replace if necessary. 4. Check “Leakage Checkpoints”
BLOWER WILL NOT START	1. No power to unit 2. Thermostat set too low 3. Defective air pressure switch 4. Defective blower 5. Disconnected or loose wire 6. Control locked out	1. Plug in power cord, check fuses and/or supply voltage 2. Turn temperature knob to higher setting 3. Replace air pressure switch 4. Replace blower 5. Repair and reconnect wires 6. Refer to “Resetting The Heater Control” – determine cause of lockout

PROBLEM	POSSIBLE CAUSE(S)	CORRECTIVE ACTION
BLOWER RUNS CONTINUOUSLY	1. Air pressure switch not closing due to insufficient draft – check for: a. Vent piping blocked b. Piping length too long c. Clogged/dirty blower 2. Disconnected, torn or blocked pressure switch hose from air pressure switch to blower housing 3. Defective pressure switch 4. High limit switch open due to excessive vent temperature or defective switch	1. Determine cause of insufficient draft. Check draft with manometer at pressure switch a. Remove blockage b. Reduce vent length/increase vent size c. Clean blower wheel 2. Reconnect or replace pressure switch hose 3. Replace defective pressure switch 4. Determine cause of overheating check for: overfiring, insufficient air supply, high ambient air temperature
HOT SURFACE IGNITER NOT GLOWING FOLLOWING WARM-UP PERIOD	1. 120VAC polarity reversed at 120VAC outlet receptacle 2. Defective hot surface igniter 3. Defective gas control valve/thermostat	1. Reverse polarity at 120VAC outlet receptacle 2. Replace igniter 3. Replace gas control valve/thermostat
VENT PIPE TOO HOT	1. Blower high limit switch fails to open - switch defective 2. Not enough dilution air to mix with flue gases 3. Air in room too hot for mixing with flue gases 4. Wrong burner orifice	1. Replace blower high limit switch Replace blower high limit switch 2. Proper air circulation must be provided for combustion and dilution of flue temp 3. Increase ventilation to lower room temperature 4. Install correct orifice.

RESETTING THE HEATER CONTROL

- Soft lockouts as diagnosed by the system error codes require the gas control to be reset.
- To reset the control, slide the “ON/OFF” switch to the “OFF” position. Wait for 10 seconds and move the switch back to the “ON” position.
- If the problem that caused the control to lock out has not been corrected, the control will remain or again go back into lockout.

LOCKOUTS

Soft Lockout

- occurs when a system safety device trips to break the sequence of operation. The control will retry the system in a timed basis but will not reinstate operation until the failure is corrected.

Hard Lockout

- occurs when the main controller fails and must be replaced.

The gas control valve\thermostat includes a temperature limiting ECO (Energy Cut Off) system that will shut off the water heater if the water temperature is too high.
Should the water temperature get too high, the diagnostic status light will indicate a code (4 flashes), indicating an over-temperature condition and the main burner will be shut off. If a high temperature condition occurs, turn the main gas supply OFF and have the water heater repaired by a qualified service technician. Contact your local dealer for service information.

Note: Should an over-temperature condition occur, restart the water heater and verify the LED flash sequence. If the 4 flash sequence is observed, slide the “ON/OFF” switch to the “OFF” position. Turn Main Gas Supply “OFF”. Replace the gas control valve\thermostat. See “Removing and Replacing the Gas Control Valve/Thermostat.”

IGNITION STATE AND TIMING

IGNITION STATE	TIMING
Pre-purge	5 seconds (NG models)
	15 seconds (LP models)
Hot Surface Igniter (HSI) Warmup	10 seconds
Ignition Activation Period (IAP)	3.5 seconds maximum
Flame Recognition Period (FRP)	0.5 second
Trial For Ignition	IAP + FRP
Flame Stabilization Period	Not Applicable
Inter-purge	30 seconds
Flame Failure Response Time	2 seconds max (@ 1uA flame current)
Post-purge	30 seconds
Pressure Switch (PS) Prove Period	2 minutes
Pressure Switch (PS) Fault Delay (failed open/closed)	2 minutes
Soft Lockout	20 minutes
Energy Cut Off (ECO) Limit Lockout	Indefinite
Flammable Vapor (FV) Sensor Lockout	Indefinite (see “Resetting The Heater Control”)

SYSTEM STATUS AND ERROR CODES

The micro-controller inside the gas control monitors the flammable vapor safety features, the ignition sequence, temperature settings and overall operation of the heater. If any of these parameters does not operate properly the controller will shut down the water heater, diagnose the failure and flash an error code. The table below lists the System Status Codes for the Honeywell control. Refer to it and to the “Trouble Shooting Guidelines” to diagnose the problem before attempting corrective action. See also “Flammable Vapor Sensor”.

LED Flash Sequence	Control Status
Short flash once every four seconds	IDLE (no call for heat, no fault conditions)
“Heartbeat”, alternates bright/dim	Call For Heat (no fault conditions)
One Flash, three second pause	Low Flame Signal (control continues to operate)
Two Flash, three second pause	Pressure Switch Failed Closed
Three Flash, three second pause	Pressure Switch Failed Open
Four Flash, three second pause	ECO (Energy Cut Off) Limit Lockout thermostat temperature limit was exceeded.
Five Flash, three second pause	Flame Out Of Sequence
Six-One Flash, three second pause	Soft Lockout - Retry Limit - Failed Trial For Ignition
Six-Two Flash, three second pause	Soft Lockout - Recycle Limit - Pressure Switch/ High Limit opened
Six-Three Flash, three second pause	Soft Lockout - Recycle Limit - Flame Lost
Six-Four Flash, three second pause	Soft Lockout - Flame out of Sequence Sensed
Seven Flash, three second pause	Flammable Vapor Sensor (FVS) Lockout
Eight-One Flash, three second pause	Flammable Vapor Sensor FVS Fault Detected
Eight-Two Flash, three second pause	Temperature Sensor Fault Detected
Eight-Three Flash, three second pause	Electronics Fault Detected
Eight-Four Flash, three second pause	Valve Fault Detected
Hardware Fault Lockout	Indefinite

This page intentionally left blank. May be used for notes or to record other installation information.

This page intentionally left blank. May be used for notes or to record other installation information.

RESIDENTIAL GAS WARRANTY

THIS WARRANTY IS APPLICABLE TO THE ORIGINAL OWNER ONLY. In accordance with the warranty terms and conditions specified below.

State Water Heaters (the warrantor) will furnish the ORIGINAL OWNER, 1) a replacement State water heater of equivalent size and current model if the glass-lined tank in this water heater leaks and, 2) a replacement part for any component part which fails.

THE STATE WATER HEATERS REPLACEMENT MODEL OR PART WILL BE WARRANTED FOR ONLY THE UNEXPIRED PORTION OF THE ORIGINAL WARRANTY. The warranty period will be determined by the original date of purchase of the water heater, or in the absence of a Bill of Sale verifying said date, from the date of manufacture indicated on rating plate affixed to this water heater. This warranty is not transferrable and applies to models listed below:

WARRANTY PERIOD		
Models	**TANK[1]**	**PARTS[2]**
GS 6	**6 YEARS**	**6 YEARS**

When the water heater has been used for other than single family residential application;

1. The tank warranty shall be reduced to 1 year for 6 year models.

2. The parts warranty shall be reduced to 1 year for all models.

CONDITIONS AND EXCEPTIONS

This warranty shall apply only when the water heater is installed and operated in accordance with 1) all local fire codes and plumbing codes, ordinances and regulations, 2) the printed instructions provided with it, 3) good industry practices, and 4) proper safety practices such as but not limited to a properly sized drain pan if installed in an area where leakage from the tank or its connections would result in damage to the area adjacent to the heater. In addition, a new temperature and pressure relief valve, certified by the Canadian Gas Association must have been properly installed and piped to the nearest drain.

This warranty shall apply only when the heater is:

- owned by the original purchaser;
- installed for indoor operation only;
- used at temperatures not exceeding the maximum calibrated setting of its thermostat;
- used at water pressure not exceeding the working pressure shown on the heater;
- filled with potable water, free to circulate at all times and with the tank free of damaging water sediment or scale deposits;
- used in a non-corrosive and non-contaminated atmosphere;
- used with factory approved anode(s) installed;
- in its original installation location;
- in the United States, its territories or possessions, and Canada;
- sized in accordance with proper sizing techniques for residential water heaters;
- bearing a rating plate which has not been altered, defaced or removed except as required by the warrantor;
- used in an open system or in a closed system with a properly sized and installed thermal expansion tank;
- operated with properly installed sediment trap (dirt leg) in the gas supply line;
- fired with the fuel for which it was factory built;
- fired at the factory rated input;
- operated with the inner and outer combustion chamber doors in place and all factory seals to combustion chamber intact.
- installed with no attempted, nor actual modification or alteration of the water heater's design in any way, including but not limited to, the attachment of non-company approved appliances or equipment.

Any accident to the water heater or any part thereof (including freezing, fire, floods, or lightning), any misuse, abuse or alteration of it, any operation of it in a modified form, any operation of the water heater on desalinated (deionized) water, or any damage caused by attempts to repair tank leaks or parts, will void this warranty. This warranty does not cover water heaters replaced for cosmetic reasons or for reasons of noise, taste, odor, discolored and/or rusty water. This warranty does not apply to water heaters used to heat pools, whirlpools or hot tubs or used for space heating where its sizing does not conform with specifications of the heating component manufacturer.

This warranty gives you specific legal rights, and you may have other rights which vary under the laws of each state. If any provision of this warranty is prohibited or invalid under applicable state law, that provision shall be ineffective to the extent of the prohibition or invalidity without invalidating the remainder of the affected provision or the other provisions of this warranty.

SERVICE AND LABOR RESPONSIBILITY

UNDER THIS LIMITED WARRANTY, THE WARRANTOR WILL PROVIDE ONLY A REPLACEMENT WATER HEATER OR PART THEREOF. THE OWNER IS RESPONSIBLE FOR ALL OTHER COSTS. Such costs may include but are not limited to:

a. Labor charges for service, removal, or reinstallation of the water heater or part thereof.

b. Shipping and delivery charges for forwarding the new water heater or replacement part from the nearest distributor and returning the claimed defective heater or part to such distributor.

c. All cost necessary or incidental for handling and administrative charges, and for any materials and/or permits required for installation of the replacement heater or part.

LIMITATION ON IMPLIED WARRANTIES

Implied warranties, including any warranty of merchantability imposed on the sale of this heater under state law are limited to one year duration for the heater or any of its parts. Some states do not allow limitations on how long an implied warranty lasts, so the above limitations may not apply to you.

CLAIM PROCEDURE

Any claim under this warranty should be initiated with the dealer who sold the heater, or with any other dealer handling the warrantor's products. If this is not practical, the owner should contact: State Industries, Inc., 500 Tennessee Waltz Parkway, Ashland City, Tennessee 37015. Phone: 1.800.365.0024 or visit our website: www.stateind.com.

Replacement Parts may be ordered through authorized servicers or distributors. Refer to your local Yellow Pages for where to call or contact State Water Heaters, 500 Tennessee Waltz Parkway, Ashland City, TN 37015, phone: 1.800.821.2017.

The warrantor will only honor replacement with identical or similar water heater or parts thereof which are manufactured or distributed by the warrantor.

Dealer replacements are made subject to in-warranty validation by warrantor.

PROOF-OF-PURCHASE AND PROOF-OF-INSTALLATION DATE ARE REQUIRED TO SUPPORT WARRANTY CLAIM FROM ORIGINAL OWNER. THIS FORM DOES NOT CONSTITUTE PROOF-OF-PURCHASE OR PROOF-OF-INSTALLATION.

DISCLAIMERS

NO EXPRESSED WARRANTY HAS BEEN OR WILL BE MADE IN BEHALF OF THE WARRANTOR WITH RESPECT TO THE MERCHANTABILITY OF THE HEATER OR THE INSTALLATION, OPERATION, REPAIR OR REPLACEMENT OF THE HEATER OR PARTS. THE WARRANTOR SHALL NOT BE RESPONSIBLE FOR WATER DAMAGE, LOSS OF USE OF THE UNIT, INCONVENIENCE, LOSS OR DAMAGE TO PERSONAL PROPERTY, OR OTHER CONSEQUENTIAL DAMAGE. THE WARRANTOR SHALL NOT BE LIABLE BY VIRTUE OF THIS WARRANTY OR OTHERWISE FOR DAMAGE TO ANY PERSONS OR PROPERTY, WHETHER DIRECT OR INDIRECT, AND WHETHER ARISING IN CONTRACT OR IN TORT.

Should governmental regulations or industry standards prohibit the Manufacturer from furnishing a comparable model replacement under this warranty, the Owner will be furnished with the closest comparable water heater meeting the then current governmental regulations and industry standards. A supplementary fee may be assessed to cover the additional cost associated with the changes made to meet applicable regulations and standards.

MPORTANT INFORMATION

Model Number _____

Serial Number _____

INSTALLATION INFORMATION

Date Installed _____

Company's Name _____

Street or P.O. Box _____

City, State, and Zip Code _____

Phone Number _____

Plumber's Name _____

state WATER HEATERS

500 Tennessee Waltz Parkway, Ashland City, TN 37015
Phone: 800-821-2017 • Fax: 800-644-9306
Website: www.statewaterheaters.com



500 Tennessee Waltz Parkway, Ashland City, TN 37015
Phone: 800-821-2017 • Fax: 800-644-9306
Website: www.statewaterheaters.com