MOEN®
COMMERCIAL

Specifications

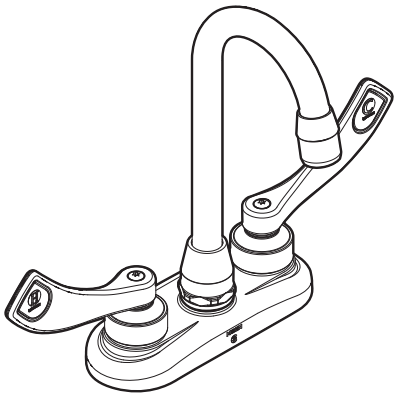

Two-Handle Bar/Pantry Faucet

Model: 8278

NOTE: Designed to be installed through 2 holes - 1" min. dia.

DESCRIPTION
- Brass construction with chrome plated finish
- 1/2" IPS connections
- Vandal resistant torx head screws

OPERATION
- Wristblade handles with hot and cold color indicators
- Vandal resistant torx head screws

FLOW
- Vandal resistant torx flow aerator
- Aerator is limited to 2.2 GPM max (8.3L /min)

CARTRIDGE
- Brass shell, ceramic disc cartridge
- 1/4 turn operation

STANDARDS
- Third party certified to meet CSA B125.1, ASME A112.18.1, ANSI A117.1 and all applicable specifications referenced therein
- Contains no more than 0.25% weighted average lead content
- Certified to ANSI/NSF 61/9
- Complies with California Proposition 65 and with the Federal Safe Drinking Water Act
- **ADA** for lever handles

WARRANTY
- Warranted for five years against material or manufacturing defects

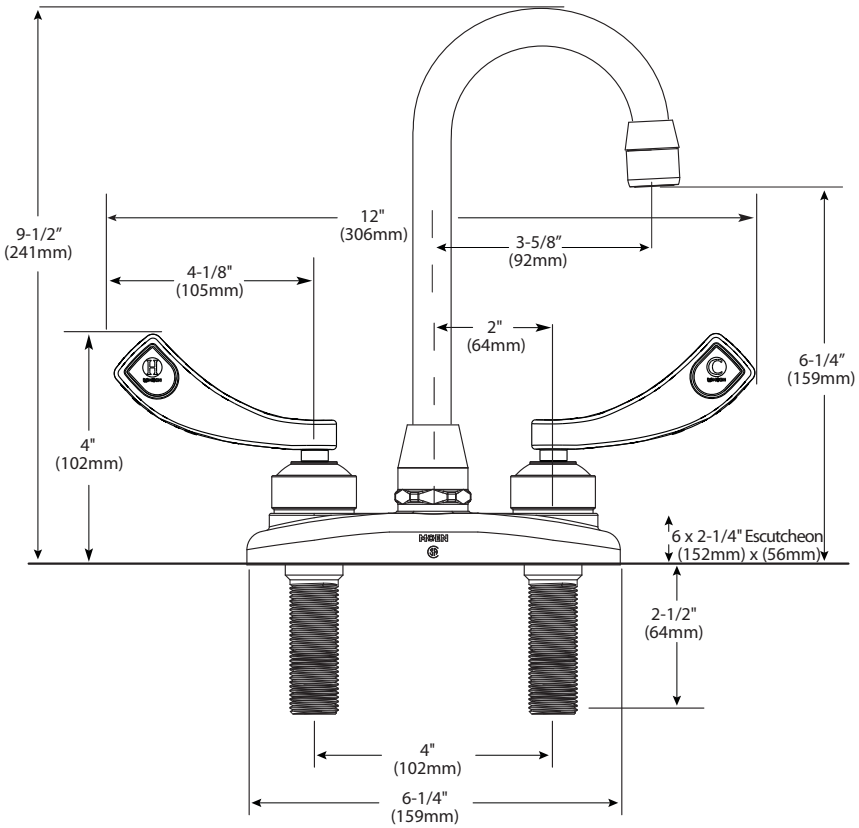

CRITICAL DIMENSIONS

(DO NOT SCALE)