Instruction Manual

RESIDENTIAL ELECTRIC WATER HEATERS

MODELS 6-120

FOR POTABLE WATER HEATING ONLY

NOT SUITABLE FOR SPACE HEATING

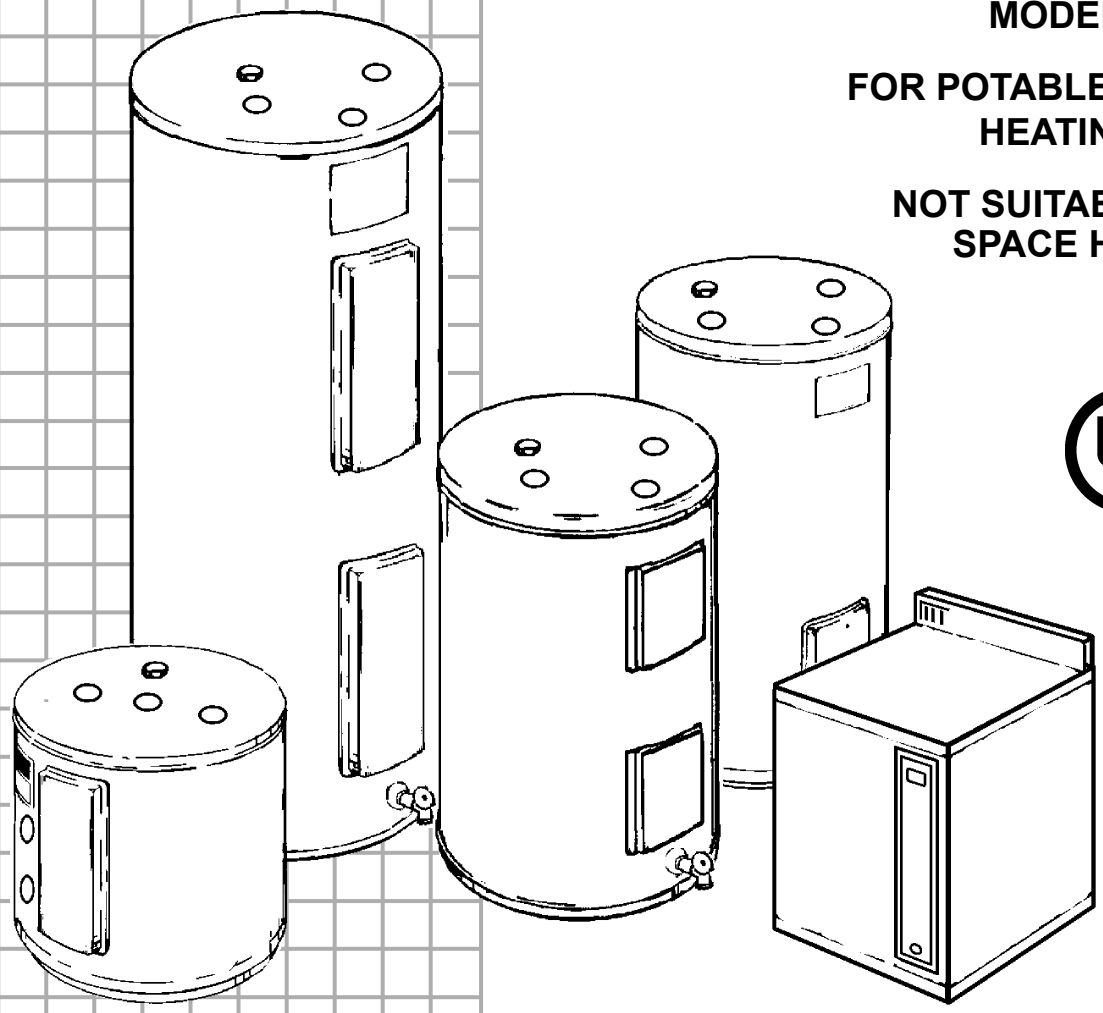

LISTED

LOW LEAD CONTENT

Certification applies to all residential electric water heaters with capacities of 20 to 120 gallons. Input rating of 12 Kw or less.



⚠ WARNING

Read and understand this instruction manual and safety messages before installing, operating, or servicing this water heater.

Failure to follow these instructions and safety messages could result in death or serious injury.

This manual must remain with water heater.

ALL TECHNICAL AND WARRANTY QUESTIONS: SHOULD BE DIRECTED TO THE LOCAL DEALER FROM WHOM THE WATER HEATER WAS PURCHASED. IF YOU ARE UNSUCCESSFUL, PLEASE WRITE TO THE COMPANY LISTED ON THE RATING PLATE ON THE WATER HEATER.

KEEP THIS MANUAL IN THE POCKET ON HEATER FOR FUTURE REFERENCE
WHEN EVER MAINTENANCE ADJUSTMENT OR SERVICE IS REQUIRED.

PRINTED IN THE U.S.A 1112

PART NO. 185762-002
SUPERSEDES PART NO. 185762-001

SAFE INSTALLATION, USE AND SERVICE

Your safety and the safety of others is extremely important in the installation, use, and servicing of this water heater.

Many safety-related messages and instructions have been provided in this manual and on your own water heater to warn you and others of a potential injury hazard. Read and obey all safety messages and instructions throughout this manual. It is very important that the meaning of each safety message is understood by you and others who install, use, or service this water heater.

	**This is the safety alert symbol. It is used to alert you to potential personal injury hazards. Obey all safety messages that follow this symbol to avoid possible injury or death.**

DANGER	**DANGER indicates an imminently hazardous situation which, if not avoided, will result in death or injury.**
WARNING	**WARNING indicates a potentially hazardous situation which, if not avoided, could result in death or injury.**
CAUTION	**CAUTION indicates a potentially hazardous situation which, if not avoided, may result in minor or moderate injury.**
CAUTION	**CAUTION used without the safety alert symbol indicates a potentially hazardous situation which, if not avoided, could result in property damage.**

All safety messages will generally tell you about the type of hazard, what can happen if you do not follow the safety message, and how to avoid the risk of injury.

The California Safe Drinking Water and Toxic Enforcement Act requires the Governor of California to publish a list of substances known to the State of California to cause cancer, birth defects, or other reproductive harm, and requires businesses to warn of potential exposure to such substances.

Warning: This product contains a chemical known to the State of California to cause cancer, birth defects, or other reproductive harm. This appliance can cause low level exposure to some of the substances listed, including formaldehyde.

IMPORTANT DEFINITIONS

- **Qualified Installer:** A qualified installer must have ability equivalent to a licensed tradesman in the fields of plumbing and electrical installation of these appliances. This would include a thorough understanding of the requirements of the National Electrical Code and applicable local electrical and plumbing codes (and tools necessary to confirm proper installation and operation of the water heater) as they relate to the installation of electric water heaters. The qualified installer must have a thorough understanding of the water heater Instruction Manual.

- **Service Agency:** A service agency also must have ability equivalent to a licensed tradesman in the fields of plumbing and electrical installation of these appliances. This would include a thorough understanding of the requirements of the National Electrical Code and applicable local electrical and plumbing codes (and tools necessary to confirm proper installation and operation of the water heater) as they relate to the installation of electric water heaters. The service agency must have a thorough understanding of the water heater Instruction Manual.

GENERAL SAFETY



⚠ WARNING

Read and understand this instruction manual and safety messages before installing, operating, or servicing this water heater.

Failure to follow these instructions and safety messages could result in death or serious injury.

This manual must remain with water heater.

CAUTION

Improper installation and use may result in property damage.

- Do not operate water heater if flood damaged.
- Inspect and replace anode.
- Install in location with drainage.
- Fill tank with water before operation.
- Be alert for thermal expansion.

Refer to this manual for installation and service.

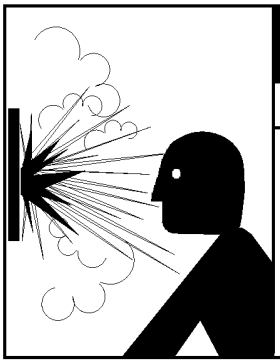

⚠ WARNING

Explosion Hazard

- Overheated water can cause water tank explosion.
- Properly sized temperature and pressure relief valve must be installed in opening provided.



⚠ WARNING

- **Before removing any access panels or servicing the water heater, make sure the electrical supply to the water heater is turned "OFF."**
- **Failure to do this could result in death, serious bodily injury, or property damage.**

⚠ DANGER

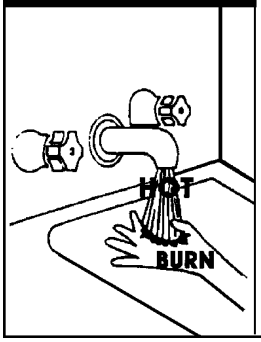

Water temperature over 125°F (52°C) can cause severe burns instantly resulting in severe injury or death.

Children, the elderly, and the physically or mentally disabled are at highest risk for scald injury.

Feel water before bathing or showering.

Temperature limiting valves are available.

Read this instruction manual for safe temperature setting.

⚠ WARNING

Fire Hazard / Electric Shock Hazard



- Do not use this water heater with any voltage other than shown on the model rating plate.
- Failure to use the correct voltage shown on the model rating plate could result in death, serious bodily injury, or property damage.



INTRODUCTION

Thank You for purchasing this water heater. Properly installed and maintained, it should give you years of trouble free service.

Abbreviations Found In This Instruction Manual:

- ANSI - American National Standards Institute
- ASME - American Society of Mechanical Engineers
- AHRI - Air Conditioning, Heating and Refrigeration Institute
- NEC - National Electrical Code
- NFPA - National Fire Protection Association
- UL - Underwriters Laboratories Inc.

PREPARING FOR THE INSTALLATION

1. Read the "General Safety" section of this manual first and then the entire manual carefully. If you don't follow the safety rules, the water heater will not operate properly. It could cause DEATH, SERIOUS BODILY INJURY, AND/OR PROPERTY DAMAGE.

   This manual contains instructions for the installation, operation, and maintenance of the electric water heater. It also contains warnings throughout the manual that you must read and understand. All warnings and all instructions are essential to the proper operation of the water heater and your safety. **READ THE ENTIRE MANUAL BEFORE ATTEMPTING TO INSTALL OR OPERATE THE WATER HEATER.**
2. The installation must conform with these instructions and the local code authority having jurisdiction and the requirements of the power company. In the absence of local code requirements follow NFPA-70, the National Electrical Code (current edition), which may be ordered from: National Fire Protection Association, 1 Batterymarch Park, Quincy, MA 02269.
3. If after reading this manual you have any questions or do not understand any portion of the instructions, call the local utility or the manufacturer whose name appears on the rating plate.
4. Carefully plan your intended placement of the water heater. INSTALLATION OR SERVICE OF THIS WATER HEATER REQUIRES ABILITY EQUIVALENT TO THAT OF A LICENSED TRADESMAN IN THE FIELD INVOLVED. PLUMBING AND ELECTRICAL WORK ARE REQUIRED.

   Examine the location to ensure the water heater complies with the "Facts to Consider About the Location" section in this manual.
5. For California installation this water heater must be braced, anchored, or strapped to avoid falling or moving during an earthquake. See instructions for correct installation procedures. Instructions may be obtained from California Office of the State Architect, 1102 Q Street, Suite 5100, Sacramento, CA 95814. Instructions can also be downloaded to your computer at www.dsa.dgs.ca.gov/Pubs.
6. Massachusetts Code requires this water heater to be installed in accordance with Massachusetts 248-CMR 2.00: State Plumbing Code and 248-CMR 5.00.

TABLE OF CONTENTS

SAFE INSTALLATION, USE AND SERVICE 2
GENERAL SAFETY 3
INTRODUCTION 4
Preparing for the New Installation 4
TABLE OF CONTENTS 4
TYPICAL INSTALLATION 5
MIXING VALVE USAGE 6
LOCATING THE NEW WATER HEATER 6-7
Facts to Consider About Location 6
Insulation Blankets 7
INSTALLING THE NEW WATER HEATER 7
Water Piping 7
Temperature-Pressure Relief Valve 9
Filling the Water Heater 10
T & P Valve and Pipe Insulation (Selected Models) 10
WIRING DIAGRAMS 11
WIRING 12
TEMPERATURE REGULATION 13
Temperature Adjustment 13
FOR YOUR INFORMATION 14
Thermal Expansion 14
Strange Sounds 14
Operational Conditions 14
Water Odor 14
"Air" in Hot Water Faucets 14
High Water Temperature Shut Off System 14
PERIODIC MAINTENANCE 15
Anode Rod Inspection 15
Temperature-Pressure Relief Valve Operation 15
Draining 15
Thermostat Removal/Replacement 16
Element Cleaning/Replacement 16-18
Drain Valve Washer Replacement 18
Service 18
LEAKAGE CHECKPOINTS 19
TROUBLESHOOTING GUIDELINES 20
REPAIR PARTS LIST 21-23

TYPICAL INSTALLATION

UPRIGHTS / LOWBOYS

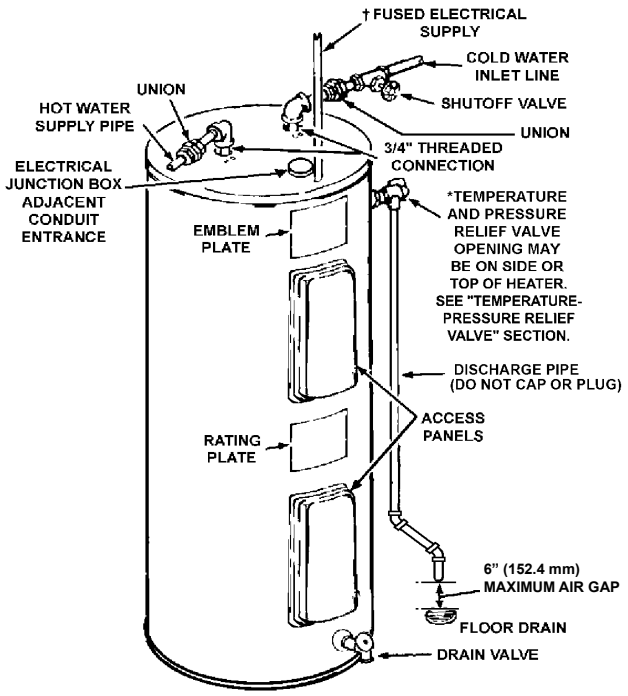

COMPACTS

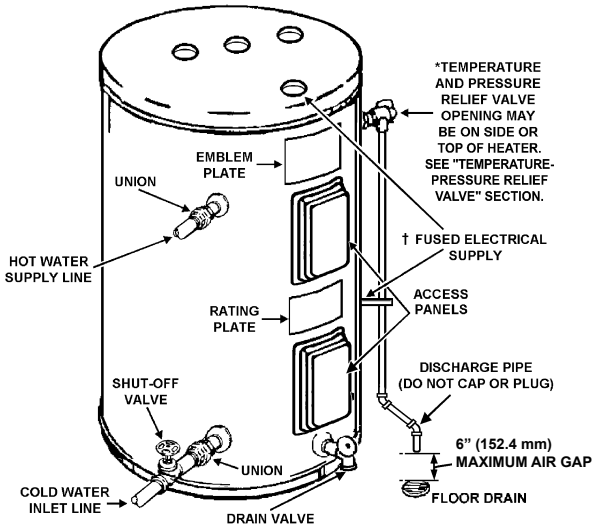

†ELECTRICAL CONNECTIONS MAY BE LOCATED ON THE TOP OR SIDE, REFER TO YOUR UNIT. ACTUAL MODEL AND ILLUSTRATION MAY VARY DEPENDENT ON MODEL CAPACITY AND TYPE. SOME MODELS HAVE ALTERNATE INLET, OUTLET AND T&P VALVE LOCATIONS. THESE ALTERNATE LOCATIONS ARE IDENTIFIED BY THE LABELING ON THE UNIT.

TABLE TOPS

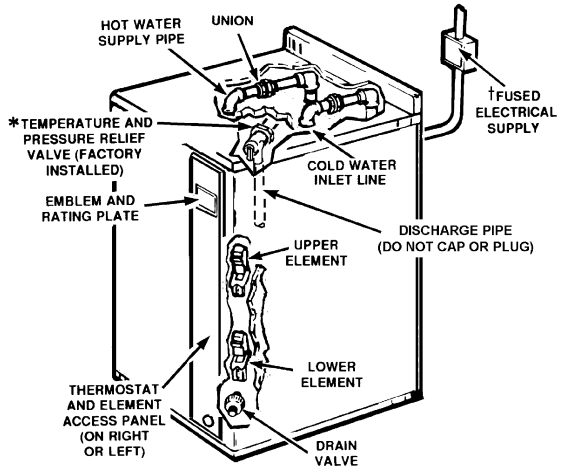

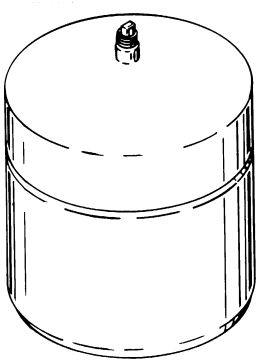

INSTALL THERMAL EXPANSION TANK OR DEVICE IF WATER HEATER IS INSTALLED IN A CLOSED WATER SYSTEM.

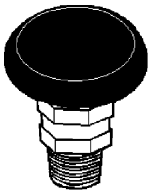

INSTALL VACUUM RELIEF IN COLD WATER INLET LINE AS REQUIRED BY LOCAL CODES.

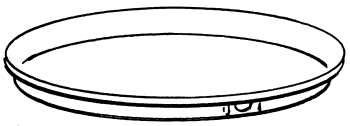

INSTALL SUITABLE METAL DRAIN PANS UNDER HEATERS TO PREVENT DAMAGE DUE TO LEAKAGE. REFER TO WATER HEATER LOCATION, SEE "INSTALLING THE NEW WATER HEATER" SECTION.

FIGURE 1.

MIXING VALVE USAGE

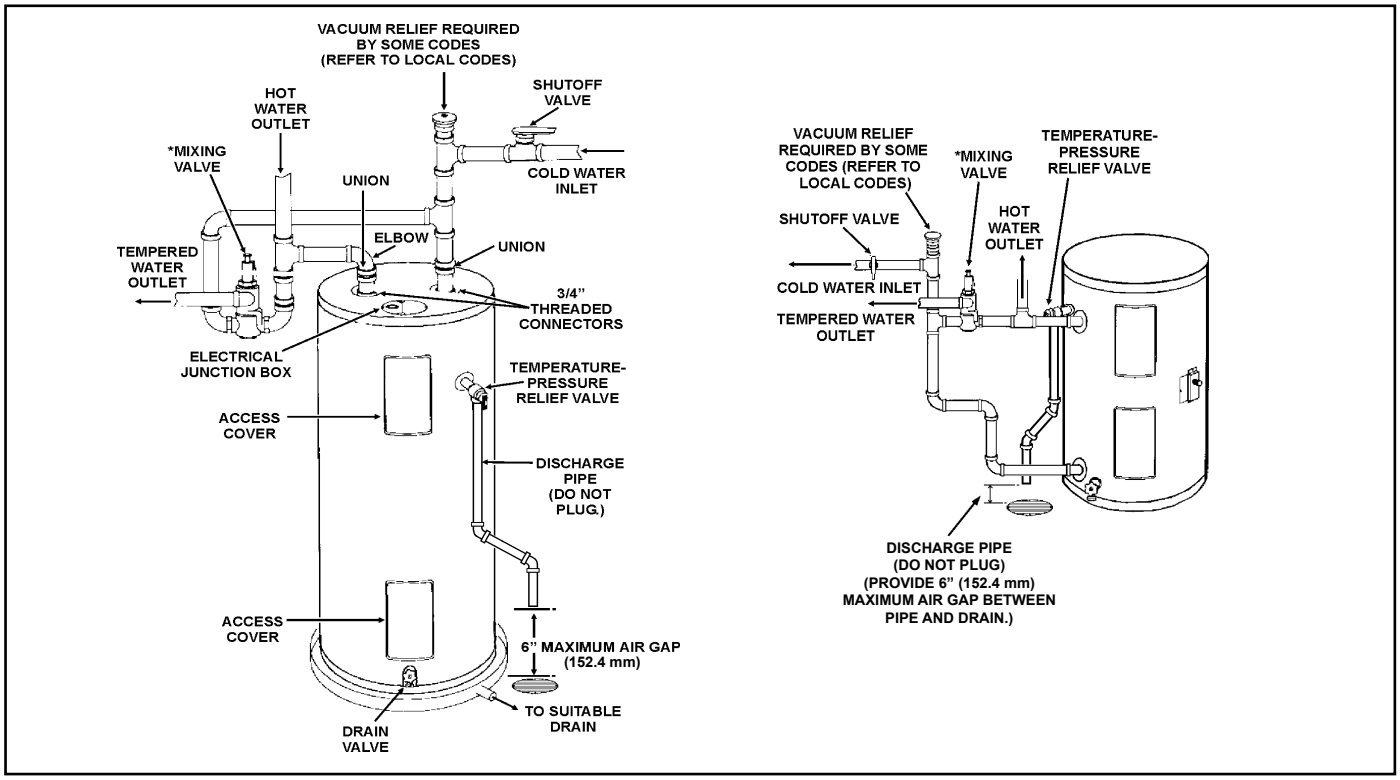

FIGURE 2.

Water (Potable) Heating: All models are considered suitable for water (potable) heating only.

⚠DANGER

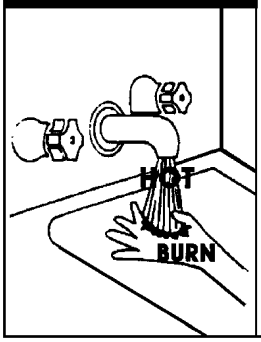

Water temperature over 125°F (52°C) can cause severe burns instantly resulting in severe injury or death.

Children, the elderly, and the physically or mentally disabled are at highest risk for scald injury.

Feel water before bathing or showering.

Temperature limiting valves are available.

Read this instruction manual for safe temperature setting.

HOTTER WATER CAN SCALD:

Water heaters are intended to produce hot water. Water heated to a temperature which will satisfy space heating, clothes washing, dish washing, and other sanitizing needs can scald and permanently injure you upon contact. Some people are more likely to be permanently injured by hot water than others. These include the elderly, children, the infirm, or physically/mentally disabled. If anyone using hot water in your home fits into one of these groups or if there is a local code or state law requiring a certain temperature water at the hot water tap, then you must take special precautions. In addition to using the lowest possible temperature setting that satisfies your hot water needs, a means such as a mixing valve, should be used at the hot water taps used by these people or at the water heater. Mixing valves are available from your local plumbing contractor. Consult a Qualified Installer or Service Agency. Follow mixing valve manufacturer's instructions for installation of the valves. Before changing the factory setting on the thermostat, read the "Temperature Regulation" section in this manual.

LOCATING THE NEW WATER HEATER

FACTS TO CONSIDER ABOUT THE LOCATION

CAUTION

Property Damage Hazard

- All water heaters eventually leak
- Do not install without adequate drainage.

Carefully choose an indoor location for the new water heater, because the placement is a very important consideration for the safety of the occupants in the building and for the most economical use of the appliance.

Whether replacing an old water heater or putting the water heater in a new location, the following critical points must be observed:

1. Select a location indoors as close as practical or centralized to the water piping system as possible. The water heater should be located in an area not subject to freezing temperatures.
2. Selected location must provide adequate clearances (4"/101.6 mm) for servicing parts such as the thermostats, drain valve, and relief valve. Adequate clearance for servicing this appliance should be considered before installation, such as changing the anodes, etc.

3. The water heater should be located so it is not subject to physical damage by moving vehicles or area flooding.

Installation of the water heater must be accomplished in such a manner that if the tank or any connections should leak, the flow will not cause damage to the structure. For this reason, it is not advisable to install the water heater in an attic or upper floor. When such locations cannot be avoided, a suitable metal drain pan should be installed under the water heater. Drain pans are available from your local plumbing contractor. Such a drain pan must have a minimum length and width of at least 2 inches (51 mm) greater that the water heater dimensions and must be piped to an adequate drain.

Water heater life depends upon water quality, water pressure and the environment in which the water heater is installed. Water heaters are sometimes installed in locations where leakage may result in property damage, even with the use of a drain pan piped to a drain. However, unanticipated damage can be reduced or prevented by a leak detector or water shut-off device used in conjunction with a piped drain pan. These devices are available from some plumbing supply wholesalers and retailers, and detect and react to leakage in various ways:

- Sensors mounted in the drain pan that trigger an alarm or turn off the incoming water to the water heater when leakage is detected.
- Sensors mounted in the drain pan that turn off the water supply to the entire home when water is detected in the drain pan.
- Water supply shut-off devices that activate based on the water pressure differential between the cold water and hot water pipes connected to the water heater.

INSULATION BLANKETS

Insulation blankets are available to the general public for external use on electric water heaters but are not necessary with this product. The purpose of an insulation blanket is to reduce the standby heat loss encountered with storage tank heaters. Your water heater meets or exceeds the National Appliance Energy Conservation Act standards with respect to insulation and standby loss requirements, making an insulation blanket unnecessary.

Should you choose to apply an insulation blanket to this heater, you should follow these instructions below. Failure to follow these instructions can result in fire, serious personal injury, or death.

- Do not cover the temperature and pressure relief (T & P) valve with an insulation blanket.
- Do not cover the instruction manual. Keep it on the side of the water heater or nearby for future reference.
- Do obtain new warning and instruction labels for placement on the blanket directly over the existing labels.

INSTALLING THE NEW WATER HEATER

WATER PIPING

⚠ DANGER

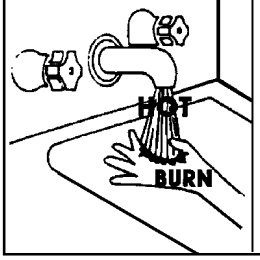

Water temperature over 125°F (52°C) can cause severe burns instantly resulting in severe injury or death.

Children, the elderly, and the physically or mentally disabled are at highest risk for scald injury.

Feel water before bathing or showering.

Temperature limiting valves are available.

Read this instruction manual for safe temperature setting.

HOTTER WATER CAN SCALD:
Water heaters are intended to produce hot water. Water heated to a temperature which will satisfy space heating, clothes washing, dish washing, cleaning and other sanitizing needs can scald and permanently injure you upon contact. Some people are more likely to be permanently injured by hot water than others. These include the elderly, children, the infirm, or physically/mentally disabled. If anyone using hot water in your home fits into one of these groups or if there is a local code or state law requiring a certain temperature water at the hot water tap, then you must take special precautions. In addition to using the lowest possible temperature setting that satisfies your hot water needs, a means such as a mixing valve should be used at the hot water taps used by these people or at the water heater. Valves for reducing point of use temperature by mixing cold and hot water are also available.

Consult a Qualified Installer or Service Agency. Follow manufacturer's instructions for installation of the valves. Before changing the factory setting on the thermostat, read the "Temperature Regulation" section in this manual.

⚠ WARNING

Toxic Chemical Hazard

- Do not connect to non-potable water system.

This water heater shall not be connected to any heating systems or component(s) used with a non-potable water heating appliance.

Use properly sized water heaters for spa or hot tub use.

Toxic chemicals, such as those used for boiler treatment shall not be introduced into this system.

As water is heated, it expands (thermal expansion). In a closed system, the volume of water will increase. As the volume of water increases, there will be a corresponding increase in water pressure due to thermal expansion. Thermal expansion can cause premature tank failure (leakage). This type of failure is not covered under the limited warranty. Thermal expansion can also cause intermittent temperature-pressure relief valve operation: water discharged from the valve due to excessive pressure build up. The temperature-pressure relief valve is not intended for the constant relief of thermal expansion. This condition is not covered under the limited warranty.

A properly-sized thermal expansion tank should be installed on all closed systems to control the harmful effects of thermal expansion. Contact a plumbing service agency or your retail supplier regarding the installation of a thermal expansion tank.

NOTE: To protect against untimely corrosion of hot and cold water fittings, it is strongly recommended that di-electric unions or couplings be installed on this water heater when connected to copper pipe.

CAUTION

Property Damage Hazard

- Avoid water heater damage.
- Install thermal expansion tank if necessary.
- Do not apply heat to cold water inlet.
- Contact qualified installer or service agency.

Figure 3 shows the typical attachment of the water piping to the water heater. The water heater is equipped with 3/4 inch NPT water connections.

NOTE: If using copper tubing, solder tubing to an adapter before attaching the adapter to the cold water inlet connection. Do not solder the cold water supply line directly to the cold water inlet, it will harm the dip tube and damage the tank.

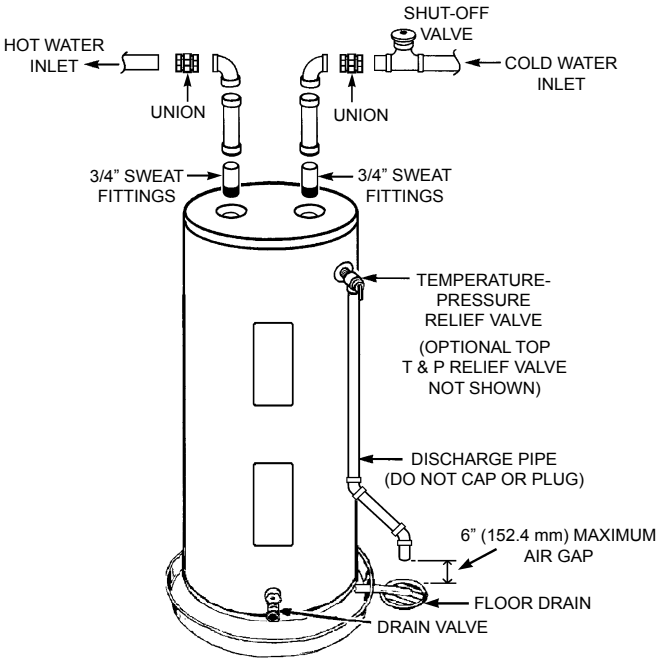

FIGURE 3.

WATER PIPING PRESSURE TEST

This section is only for the manufacturer installing the water heater when the installation is to comply with H.U.D. Standards.

When testing the water ways, H.U.D. Standards state: "Water distribution system: All water piping in the water distribution system shall be subjected to a pressure test. The test shall be made by subjecting the system to air or water at 100 psi for 15 minutes without loss of pressure. **When air pressure is used, the water heater shall not be connected during the test**."

⚠ WARNING

Air Pressure Hazard

- If water piping system is to be air pressure tested, the water heater must be disconnected from the water piping system.
- Failure to disconnect the water heater during air pressure testing of the water system could result in DEATH, SERIOUS BODILY INJURY, OR PROPERTY DAMAGE.

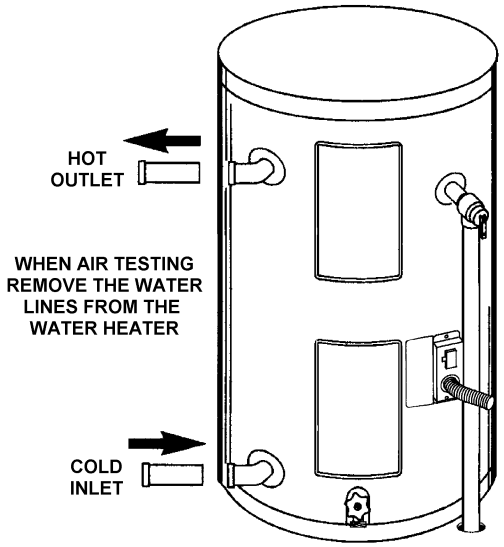

FIGURE 3A.

TEMPERATURE-PRESSURE RELIEF VALVE

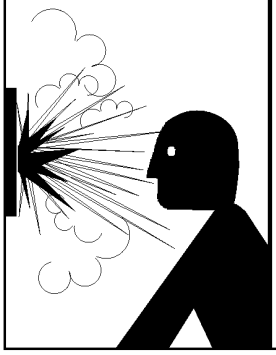

⚠ WARNING

Explosion Hazard

- Temperature-pressure relief valve must comply with ANSI Z21.22, CSA 4.4 and ASME Code.
- Properly sized temperature-relief valve must be installed in opening provided.
- Can result in overheating and excessive tank pressure.
- Can cause serious injury or death.

This heater is provided with a properly certified combination temperature - pressure relief valve by the manufacturer.

The valve is certified by a nationally recognized testing laboratory that maintains periodic inspection of production of listed equipment of materials as meeting the requirements for Relief Valves for Hot Water Supply Systems, ANSI Z21.22 • CSA 4.4, and the code requirements of ASME.

If replaced, the valve must meet the requirements of local codes, but not less than a combination temperature and pressure relief valve certified as indicated in the above paragraph.

The valve must be marked with a maximum set pressure not to exceed the marked hydrostatic working pressure of the water heater (150 psi = 1,034.21 kPa) and a discharge capacity not less than the water heater input rate as shown on the model rating plate (Electric heaters - watts x 3.412 equal BTU/hr rate).

For safe operation of the water heater, the relief valve must not be removed from its designated opening nor plugged.

The temperature-pressure relief valve must be installed directly into the fitting of the water heater designed for the relief valve. Position the valve downward and provide tubing so that any discharge will exit only within 6 inches (152.4 mm) above an adequate drain, or external to the building or structure. Be certain that no contact is made with any live electrical part. The discharge opening must not be blocked or reduced in size under any circumstances. Excessive length, over 30 feet (9.14 m), or use of more than four elbows can cause restriction and reduce the discharge capacity of the valve.

No valve or other obstruction is to be placed between the relief valve and the tank. Do not connect tubing directly to discharge drain unless a 6 inch air gap is provided. The relief valve must be allowed to discharge water in sufficient quantities, should circumstances demand, to prevent bodily injury, hazard to life, or property damage. If the discharge pipe is not connected to a drain or other suitable means, the water flow may cause property damage.

CAUTION

Water Damage Hazard

- Temperature-pressure relief valve discharge pipe must terminate at adequate drain.

The Discharge Pipe:

- Shall not be smaller in size than the outlet pipe size of the valve, or have any reducing couplings or other restrictions.
- Shall not be plugged or blocked.
- Shall be of material listed for hot water distribution.
- Shall be installed so as to allow complete drainage of both the temperature-pressure relief valve, and the discharge pipe.
- Shall terminate at an adequate drain.
- Shall not have any shut-off valve between the relief valve and tank nor in the discharge pipe.

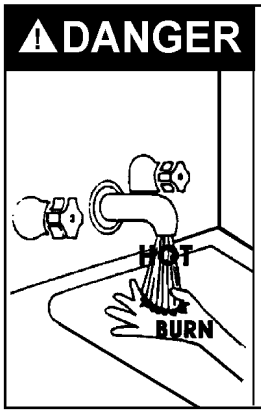

⚠ DANGER

Water temperature over 125°F (52°C) can cause severe burns instantly resulting in severe injury or death.

Children, the elderly, and the physically or mentally disabled are at highest risk for scald injury.

Feel water before bathing or showering.

Temperature limiting valves are available.

Read this instruction manual for safe temperature setting.

The temperature-pressure relief valve must be manually operated at least once a year. Caution should be taken to ensure that (1) no one is in front of or around the outlet of the temperature-pressure relief valve discharge line, and (2) the water manually discharged will not cause any bodily injury or property damage because the water may be extremely hot.

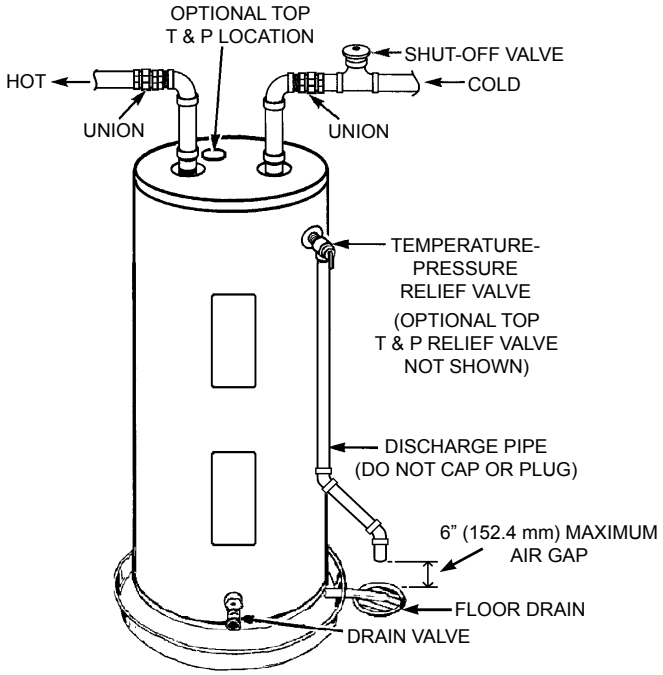

FIGURE 4.

If after manually operating the valve, it fails to completely reset and continues to release water, immediately close the cold water inlet to the water heater, follow the draining instructions, and replace the temperature-pressure relief valve with a new one.

FILLING THE WATER HEATER

CAUTION

Property Damage Hazard

- Avoid water heater damage.
- Fill tank with water before operating.

Never use this water heater unless it is completely full of water. To prevent damage to the tank and heating element, the tank must be filled with water. Water must flow from the hot water faucet before turning "ON" electrical supply to the water heater. The manufacturer will not warrant any elements damaged by failure to follow instructions.

To fill the water heater with water:

1. Close the water heater drain valve by turning the handle to the right (clockwise). The drain valve is on the lower front of the water heater.
2. Open the cold water supply valve to the water heater. **NOTE: The cold water supply valve must be left open when the water heater is in use.**
3. To insure complete filling of the tank, allow air to exit by opening the nearest hot water faucet. Allow water to run until a constant flow is obtained. This will let air out of the water heater and the piping.
4. Check all water piping and connections for leaks. Repair as needed.
5. Never alter or modify the certified construction of the water heater or its components, or bypass any safety features. Doing so voids all warranties.

T&P VALVE and PIPE INSULATION (On Selected Models)

⚠DANGER

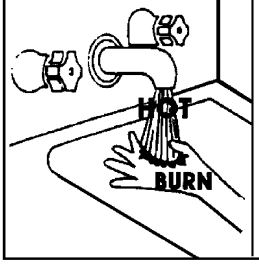

When a supplemental heat source such as a solar storage tank is connected to the water heater, a remote temperature control device should be installed in the water piping to limit water temperatures. The temperature setting of this control should not exceed that of the water heater thermostat setting. Failure to adjust both thermostats can cause loss of proper temperature control, and could potentially produce water temperature in excess of 180°F.

Remove insulation for T&P Valve and pipe connections from carton.

Fit pipe insulation over the incoming cold water line and the hot water line. Make sure that the insulation is against the top cover of the heater.

Fit T&P Valve insulation over valve. Make sure that the insulation does not interfere with the lever or outlet of the T&P valve.

Secure all insulation using tape.

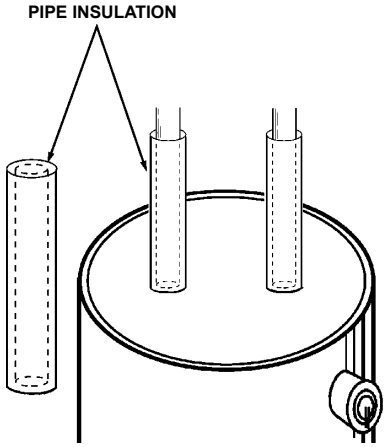

FIGURE 5.

WIRING DIAGRAMS



FOR ACTUAL WIRING CIRCUIT OF UNIT - REFERENCE CIRCUIT TYPE LISTED ON RATING PLATE.

P-4

120/208/240/277/416/480 VOLT SIMULTANEOUS OPERATION 3 PHASE UNBALANCED SIMULTANEOUS

BOTH CIRCUITS PROTECTED BY HI-LIMIT SWITCH. FOR 3 PHASE SYSTEMS, SEPARATE BLACK WIRES AND PROVIDE 3 PHASE POWER SOURCE, NOTE: 120V AND 277V WIRED FOR SINGLE PHASE ONLY.

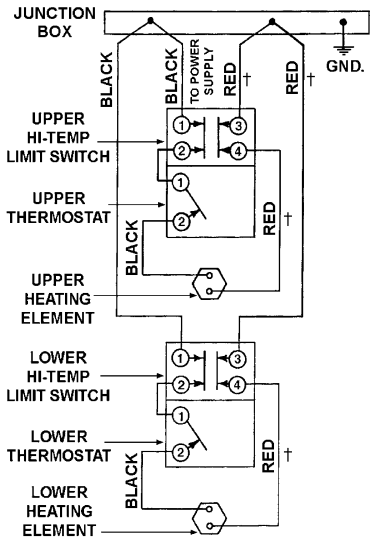

***NOTE: SOME LOWER HI-TEMP. LIMIT SWITCHES MAY HAVE 4 TERMINALS. USE ONLY THE 2 TERMINALS ON LEFT.**

† 120V AND 277 WILL HAVE WHITE WIRE IN PLACE OF RED.

MAXIMUM ALLOWABLE SIMULTANEOUS OPERATION
5000/5000 WATTS AT 208 VOLTS 5500/5500 WATTS AT 240 VOLTS. ANY WATTAGE USAGE HIGHER THAN LISTED ABOVE EXCEEDS ALLOWABLE AMP DRAW AND WILL CAUSE DAMAGE TO THE WATER HEATER OR COULD RESULT IN FIRE.

A-6

TWO WIRE CIRCUIT FOR NON-SIMULTANEOUS OPERATION, HAS SINGLE HIGH LIMIT CONTROL

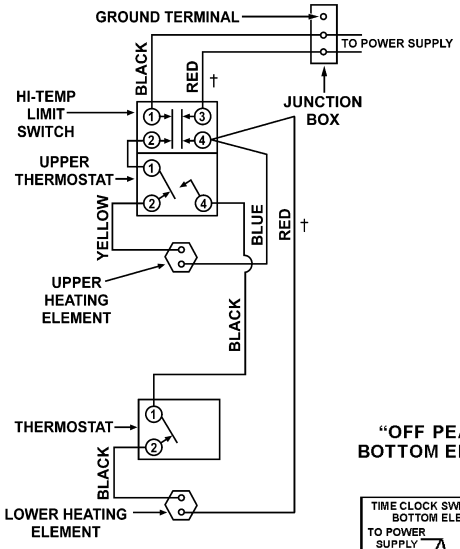

C-2

STANDARD SINGLE ELEMENT

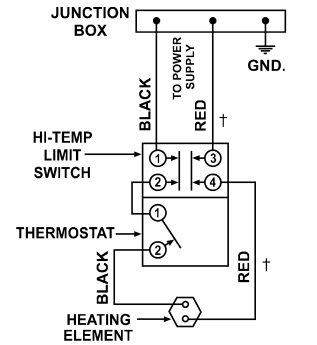

C-2

STANDARD SINGLE ELEMENT 120 VOLT & 277 VOLT

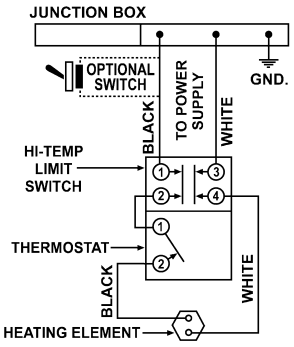

A-9

"OFF PEAK" NON-SIMULTANEOUS OPERATION BOTTOM ELEMENT ON SEPARATE TIME CLOCK OR "OFF PEAK" METER

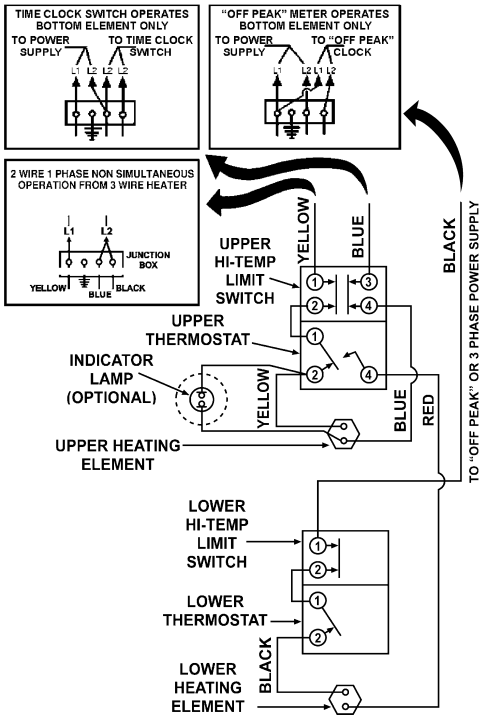

FIGURE 6.

WIRING

CAUTION

Improper installation and use may result in property damage.

- Fill tank with water before operation.

Never use water heater unless it is completely full of water. To prevent damage to the tank and heating element, the tank must be filled with water. Water must flow from the hot water faucet before turning on power.

You must provide all wiring of the proper size outside of the water heater. You must obey local codes and electric company requirements when you install this wiring.

If you are not familiar with electric codes and practices, or if you have any doubt, even the slightest doubt, in your ability to connect the wiring to this water heater, obtain the service of a competent electrician. Contact a local electrical contractor and/or the local electric utility.

⚠ WARNING

Fire Hazard / Electric Shock Hazard



- Do not use this water heater with any voltage other than shown on the model rating plate.
- Failure to use the correct voltage shown on the model rating plate could result in death, serious bodily injury, or property damage.

WATER HEATERS EQUIPPED FOR ONE VOLTAGE ONLY: This water heater is equipped for one type voltage only. Check the rating plate near the bottom access panel for the correct voltage. DO NOT use this water heater with any voltage other than the one shown on the model rating plate. Failure to use the correct voltage can cause problems which can result in DEATH, SERIOUS BODILY INJURY, OR PROPERTY DAMAGE. If you have any questions or doubts consult your electric company.

If wiring from your fuse box or circuit breaker box was aluminum for your old water heater, replace it with copper wire. If you wish to reuse the existing aluminum wire, have the connection at the water heater made by a competent electrician. Contact a local electrical contractor and/or the local electric utility.

1. Provide a way to easily shut off the electric power when working on the water heater. This could be with a circuit breaker or fuse block in the entrance box or a separate disconnect switch.

2. Install and connect a circuit directly from the main fuse or circuit breaker box. This circuit must be the right size and have its own fuse or circuit breaker.

3. If metal conduit is used for the grounding conductor:

   A. The grounding electrode conductor shall be of copper, aluminum, or copperclad aluminum. The material shall be of one continuous length without a splice or joint.

   B. Rigid metal conduit, intermediate metal conduit, or electrical, metallic tubing may be used for the grounding means if conduit or tubing is terminated in fittings approved for grounding.

   C. Flexible metal conduit or flexible metallic tubing shall be permitted for grounding if all the following conditions are met:

      - The length in any ground return path does not exceed 6 feet.
      - The circuit conductors contained therein are protected by overcurrent devices rated at 20 amperes or less.
      - The conduit or tubing is terminated in fittings approved for grounding.

For complete grounding details and all allowable exceptions, refer to the current edition of the Nation Electrical Code NFPA 70.

4. A standard 1/2” conduit opening has been made in the water heater junction box for the conduit connections.

5. Use wire nuts and connect the power supply wiring to the wires inside the water heater’s junction box.

6. The water heater must be electrically “grounded” by the installer. A green ground screw has been provided on the water heater’s junction box. Connect ground wire to this location.

7. Replace the wiring junction cover using the screw provided.

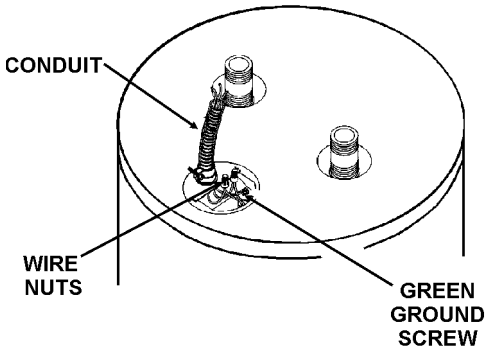

FIGURE 7.

TEMPERATURE REGULATION

⚠ DANGER

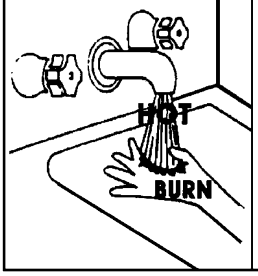

Water temperature over 125°F (52°C) can cause severe burns instantly resulting in severe injury or death.

Children, the elderly, and the physically or mentally disabled are at highest risk for scald injury.

Feel water before bathing or showering.

Temperature limiting valves are available.

Read this instruction manual for safe temperature setting.

HOTTER WATER CAN SCALD: Water heaters are intended to produce hot water. Water heated to a temperature which will satisfy space heating, clothes washing, dish washing, and other sanitizing needs can scald and permanently injure you upon contact. Some people are more likely to be permanently injured by hot water than others. These include the elderly, children, the infirm, or physically/mentally disabled. If anyone using hot water in your home fits into one of these groups or if there is a local code or state law requiring a certain temperature water at the hot water tap, then you must take special precautions. In addition to using the lowest possible temperature setting that satisfies your hot water needs, a means such as a mixing valve, should be used at the hot water taps used by these people or at the water heater. Mixing valves are available from your local plumbing contractor. Follow manufacturer's instructions for installation of the valves. Before changing the factory setting on the thermostat, see Figure 8.

Never allow small children to use a hot water tap or to draw their own bath water. Never leave a child or handicapped person unattended in a bathtub or shower.

It is recommended that lower water temperatures be used to avoid the risk of scalding. It is further recommended, in all cases, that the water temperature thermostat be set for the lowest temperature which satisfies your hot water needs. This will also provide the most energy efficient operation of the water heater. Thermostat(s) are factory set at 120°F (49°C) unless specified differently by state requirements.

KEEPING THE THERMOSTAT SETTING AT 120°F (49°C) WILL REDUCE THE RISK OF SCALDS.

Figure 8 shows the approximate time-to-burn relationship for normal adult skin.

TEMPERATURE ADJUSTMENT



⚠ WARNING

- **Before removing any access panels or servicing the water heater, make sure the electrical supply to the water heater is turned "OFF."**
- **Failure to do this could result in death, serious bodily injury, or property damage.**

To change the temperature setting:

NOTE: It is not necessary to adjust the upper thermostat. However, if it is adjusted above the factory set point (120°F (49°C)) it is recommended that it not be set higher than the lower thermostat setting.

1. Turn off the heater electrical supply. Do not attempt to adjust thermostat with power on.
2. Remove the thermostat access panel(s) and fold up insulation to expose the thermostats. Do not remove the plastic personnel protectors covering the thermostats.
3. Using a flat tip screwdriver, rotate the adjustment knob to the desired temperature setting.
4. Replace the insulation and access panels and turn on heater electrical supply.

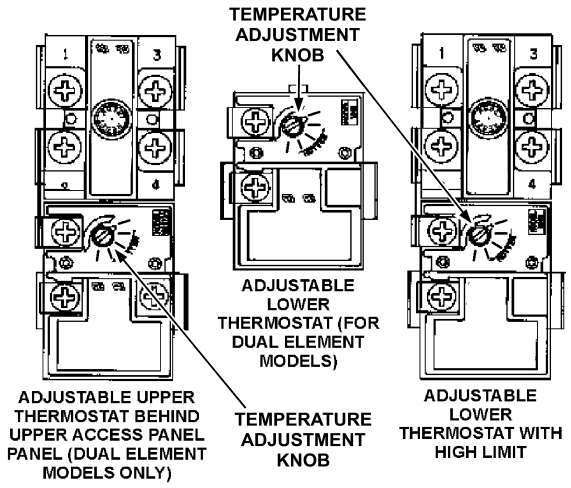

TEMPERATURE SETTINGS

It is recommended that the dial be set lower whenever possible.

Temperature Setting	Time to Produce 2nd & 3rd Degree Burns on Adult Skin
160°F (71°C)	About 1/2 second
150°F (66°C)	About 1-1/2 seconds
140°F (60°C)	Less than 5 seconds
130°F (54°C)	About 30 seconds
120°F (49°C)	More than 5 minutes

FIGURE 8.

FOR YOUR INFORMATION

THERMAL EXPANSION

CAUTION

Property Damage Hazard

- Avoid water heater damage.
- Install thermal expansion tank or device if necessary.
- Contact qualified installer or service agency.

As water is heated, it expands (thermal expansion). In a closed system, the volume of water will increase. As the volume of water increases, there will be a corresponding increase in water pressure due to thermal expansion. Thermal expansion can cause premature tank failure (leakage). This type of failure is not covered under the limited warranty. Thermal expansion can also cause intermittent temperature-pressure relief valve operation: water discharged from the valve due to excessive pressure build up. The temperature-pressure relief valve is not intended for the constant relief of thermal expansion. This condition is not covered under the limited warranty.

A properly-sized thermal expansion tank should be installed on all closed systems to control the harmful effects of thermal expansion. Contact a plumbing service agency or your retail supplier regarding the installation of a thermal expansion tank.

STRANGE SOUNDS

Possible noises due to expansion and contraction of some metal parts during periods of heat-up and cool-down do not necessarily represent harmful or dangerous conditions.

OPERATIONAL CONDITIONS

WATER ODOR

In each water heater there is installed at least one anode rod (see parts sections) for corrosion protection of the tank. Certain water conditions will cause a reaction between this rod and the water. The most common complaint associated with the anode rod is one of a “rotten egg smell” in the hot water. This odor is derived from hydrogen sulfide gas dissolved in the water. The smell is the result of four factors which must all be present for the odor to develop:

A. A concentration of sulfate in the supply water.
B. Little or no dissolved oxygen in the water.
C. A sulfate reducing bacteria which has accumulated within the water heater (this harmless bacteria is nontoxic to humans).
D. An excess of active hydrogen in the tank. This is caused by the corrosion protective action of the anode.

Smelly water may be eliminated or reduced in some water heater models by replacing the anode(s) with one of less active material, and then chlorinating the water heater tank and all hot water lines. Contact the local water heater supplier or service agency for further information concerning an Anode Replacement Kit and this chlorination treatment. If the smelly water persists after the anode replacement and chlorination treatment, we can only suggest that chlorination or aeration of the water supply be considered to eliminate the water problem.

Do not remove the anode leaving the tank unprotected. By doing so, all warranty on the water heater tank is voided.

“AIR” IN HOT WATER FAUCETS

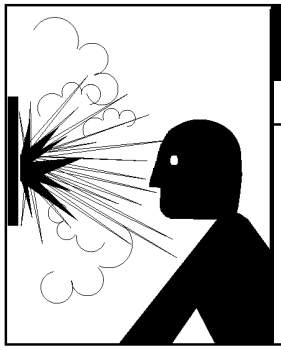

⚠ WARNING

Explosion Hazard

- Flammable hydrogen gases may be present.
- Keep all ignition sources away from faucet when turning on hot water.

HYDROGEN GAS: Hydrogen gas can be produced in a hot water system that has not been used for a long period of time (generally two weeks or more). Hydrogen gas is extremely flammable and explosive. To prevent the possibility of injury under these conditions, we recommend the hot water faucet, located farthest away, be opened for several minutes before any electrical appliances which are connected to the hot water system are used (such as a dishwasher or washing machine). If hydrogen gas is present, there will probably be an unusual sound similar to air escaping through the pipe as the hot water faucet is opened. There must be no smoking or open flame near the faucet at the time it is open.

HIGH WATER TEMPERATURE SHUT OFF SYSTEM

A non-adjustable high temperature limit control operates before steam temperatures are reached. The high limit is in the same area as the upper thermostat and must be reset manually when it operates. BECAUSE THE HIGH LIMIT OPERATES ONLY WHEN ABNORMALLY HIGH WATER TEMPERATURES ARE PRESENT, IT IS IMPORTANT THAT A QUALIFIED SERVICE AGENT BE CONTACTED TO DETERMINE THE REASON FOR OPERATION BEFORE RESETTING.



⚠ WARNING

- **Before removing any access panels or servicing the water heater, make sure the electrical supply to the water heater is turned “OFF.”**
- **Failure to do this could result in death, serious bodily injury, or property damage.**

- Turn off the heater electrical supply. Do not attempt to reset thermostat with power on.
- Remove the screw securing the outer door and remove door.
- Fold up the insulation to expose the reset button.
- Reset the high limit by pushing in the red button marked “RESET”.
- Replace the insulation so that it completely covers the thermostat and element.
- Replace the outer door.
- Turn “ON” electric power to the water heater.

PERIODIC MAINTENANCE

ANODE ROD INSPECTION

CAUTION

Property Damage Hazard

- Avoid water heater damage.
- Inspection and replacement of anode rod required.

Each water heater contains at least one anode rod, which will slowly deplete (due to electrolysis) prolonging the life of the water heater by protecting the glass-lined tank from corrosion. Adverse water quality, hotter water temperatures, high hot water usage, hydronic heating devices, and water softening methods can increase the rate of anode rod depletion. Once the anode rod is depleted, the tank will start to corrode, eventually developing a leak.

Certain water conditions will cause a reaction between the anode rod and the water. The most common complaint associated with the anode rod is a “rotten egg smell” produced from the presence of hydrogen sulfi de gas dissolved in the water. IMPORTANT: Do not remove this anode rod permanently as it will void any warranties. A special anode rod may be available if water odor or discoloration occurs. NOTE: This anode rod may reduce but not eliminate water odor problems. The water supply system may require special filtration equipment from a water conditioning company to successfully eliminate all water odor problems.

Artificially softened water is exceedingly corrosive because the process substitutes sodium ions for magnesium and calcium ions. The use of a water softener may decrease the life of the water heater tank.

The anode rod should be inspected after a maximum of three years and annually thereafter until the condition of the anode rod dictates its replacement. NOTE: Artificially softened water requires the anode rod to be inspected annually.

The following are typical (but not all) signs of a depleted anode rod:

- The majority of the anode rod’s diameter is less than 3/8”.
- Significant sections of the support wire (approx. 1/3 or more of the anode rod’s length) are visible.

If the anode rod show signs of either or both it should be replaced. NOTE: Whether re-installing or replacing the anode rod, check for any leaks and immediately correct if found.

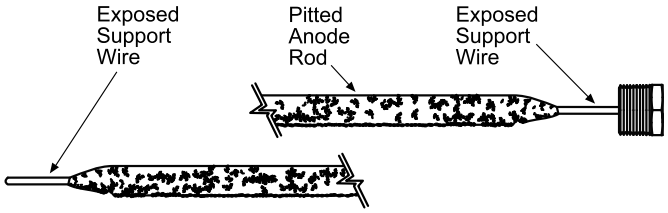

FIGURE 9A.

In replacing the anode:

1. Turn off gas supply to the water heater.
2. Shut off the water supply and open a nearby hot water faucet to depressurize the water tank.
3. Drain approximately 5 gallons of water from tank. (Refer to “Draining and Flushing” for proper procedures). Close drain valve.
4. Remove old anode rod.
5. Use Tefl on® tape or approved pipe sealant on threads and install new anode rod.
6. Turn on water supply and open a nearby hot water faucet to purge air from water system.
7. Check for any leaks and immediately correct any if found.
8. 7. Restart the water heater as directed in this manual. See the Repair Parts Illustration for anode rod location.

TEMPERATURE-PRESSURE RELIEF VALVE OPERATION

⚠DANGER

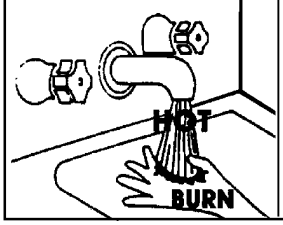

- Burn hazard
- Hot water discharge.
- Keep clear of relief valve discharge outlet.

The temperature-pressure relief valve must be manually operated at least once a year.

When checking the temperature-pressure relief valve operation, make sure that (1) no one is in front of or around the outlet of the temperature-pressure relief valve discharge line, and (2) that the water discharge will not cause any property damage, as the water may be extremely hot, see Figure 9.

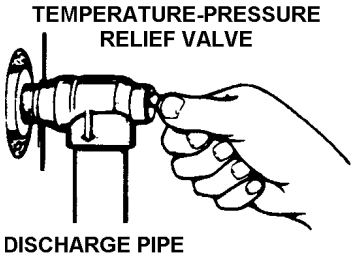

FIGURE 9B.

If after manually operating the valve, it fails to completely reset and continues to release water, immediately close the cold water inlet to the water heater, follow the draining instructions, and replace the temperature-pressure relief valve with a new one.

If the temperature-pressure relief valve on the appliance weeps or discharges periodically, this may be due to thermal expansion. You may have a check valve installed in the water line or a water meter with a check valve. Consult your local water supplier or service agency for further information. Do not plug or remove the temperature-pressure relief valve.

DRAINING

⚠DANGER

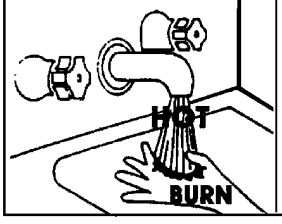

- Burn hazard
- Hot water discharge.
- Keep hands clear of drain valve discharge.

The water heater should be drained if being shut down during freezing temperatures. Also periodic draining and cleaning of sediment from the tank may be necessary.

1. Turn electrical supply “OFF”.
2. CLOSE the cold water inlet valve to the water heater.
3. OPEN a nearby hot water faucet and leave open to allow for draining.
4. Connect a hose to the drain valve and terminate to an adequate drain.

5. OPEN the water heater drain valve to allow for tank draining.
   NOTE: If the water heater is going to be shut down and drained for an extended period, the drain valve should be left open with hose connected allowing water to terminate to an adequate drain.
6. Close the drain valve.
7. Follow the instructions in the "Filling the Water Heater" section.

THERMOSTAT REMOVAL / REPLACEMENT



1. Turn "OFF" the electric power supply to the water heater.
2. Remove the outer door. Remove or fold up the insulation pad.
3. A. **Models with lower thermostat without high limit:** Lift out the tab as shown below to unclip the terminal cover from the thermostat. The terminal cover can now be removed from the thermostat.

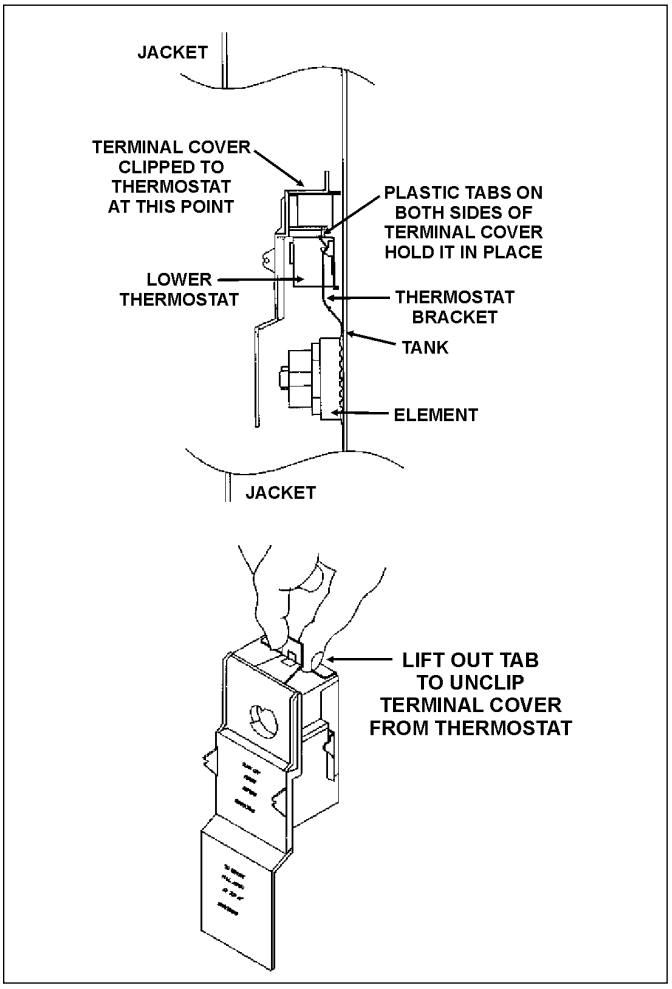

FIGURE 10.

B. **Models with Upper or Lower Thermostat with High Limit:** Lift out the tab as shown below to unclip the terminal cover from the thermostat. The terminal cover can now be removed from the thermostat.

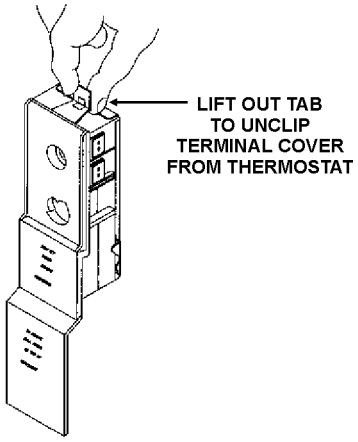

FIGURE 11.

4. Disconnect wires from thermostat and slide out of the bracket.
5. Remove the thermostat from behind the thermostat bracket.
6. Place the new lower thermostat in the bracket making sure it fits firmly against the tank.
7. Attach the wires to the new thermostat.

   NOTE: Some of the terminals may require straight-in wiring through an eye-opening. If wires are now looped, recut and strip wire 3/8" (9.525 mm) to a straight length and insert.
8. Put plastic terminal cover back in place.
9. Replace the insulation to cover the thermostat.
10. Replace outer door then turn the electric power on.

ELEMENT CLEANING / REPLACEMENT

NOTE: These instructions are written for element cleaning and element replacement for the lower element.

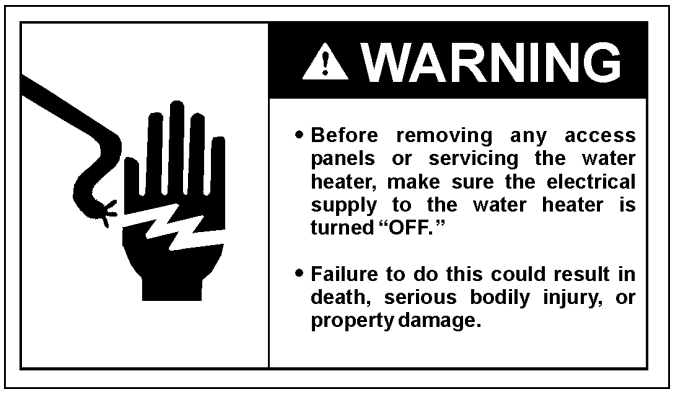

To remove the element from the tank in order to clean or replace it:

1. Before beginning turn "OFF" the electric power supply to the water heater.
2. Turn off the water supply to the water heater at the water shut-off valve or water meter, see Figure 12.



FIGURE 12.

3. Attach a hose to the water heater drain valve and put the other end in a floor drain or outdoors. Open the water heater drain valve. Open a nearby hot water faucet which will relieve pressure in the water heater and speed draining.

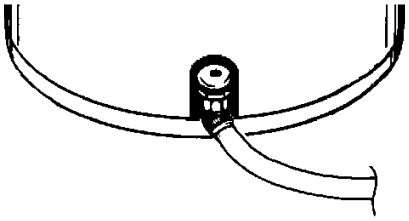

FIGURE 13.

The water passing out of the drain valve may be extremely hot. To avoid being scald, make sure all connections are tight and that the water flow is directed away from any person.

4. Remove the screw securing the outer door, and remove door.

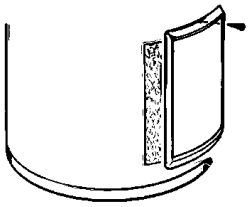

FIGURE 14.

5. Fold up the insulation to explose thermostat therminal cover.

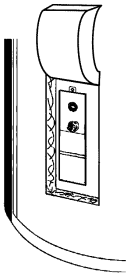

FIGURE 15.

6. A. **Models with lower thermostat without high limit:** Lift out the tab as shown below to unclip the terminal cover from the thermostat. The terminal cover can now be removed from the thermostat.

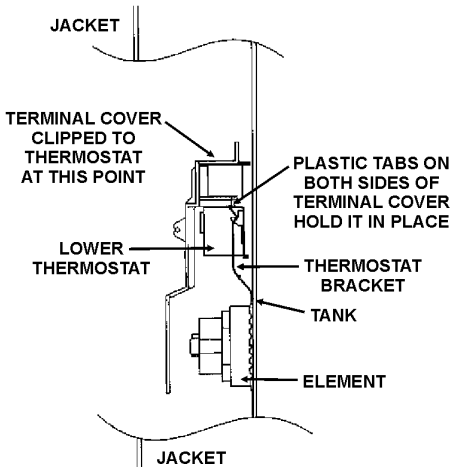

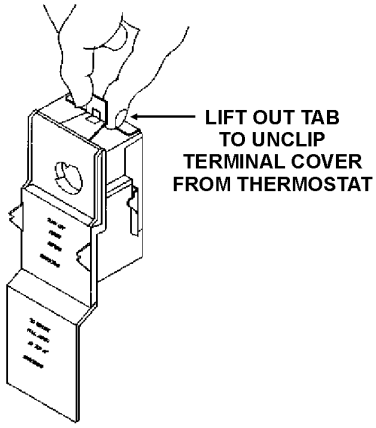

FIGURE 16.

B. **Models with Upper or Lower Thermostat with High Limit:**Lift out the tab as shown below to unclip the terminal cover from the thermostat. The terminal cover can now be removed from the thermostat.

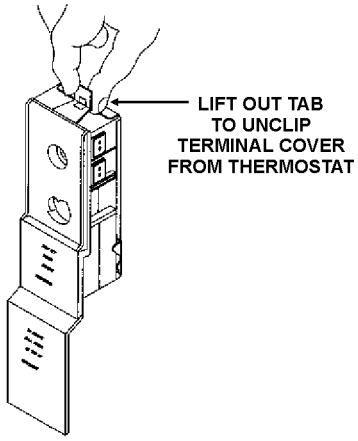

FIGURE 17.

7. Disconnect the two wires on the element and unscrew the old element from the tank.

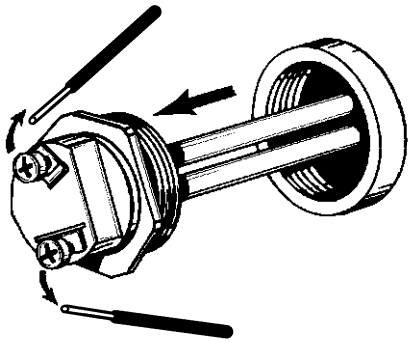

FIGURE 18.

8. Clean the area around the element opening. Remove any sediment from or around the element opening and inside the tank.
9. If you are cleaning the element you have removed, do so by scraping or soaking in vinegar or a deliming solution.

NOTE: Replacement elements must (1) be the same voltage and (2) no greater wattage than listed on the model rating plate affixed to the water heater.

10. A new gasket should be used in all cases to prevent a possible water leak. Place the new element gasket on the threaded side of the cleaned or new element and screw into tank, securing tightly using an element wrench.

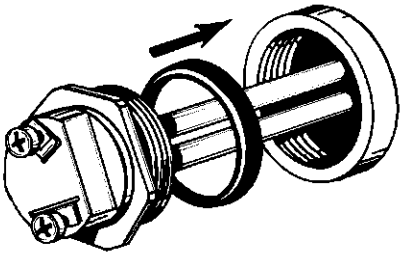

FIGURE 19.

11. Close the water heater drain valve by turning the handle to the right (clockwise). The drain valve is on the lower front of the water heater.
12. Open the cold water supply valve to the water heater.

NOTE: The cold water supply valve must be left open when the water heater is in use.

13. To ensure complete filling of the tank, allow air to exit by opening the nearest hot water faucet. Allow water to run until a constant flow is obtained. This will let air out of the water heater and the piping.

CAUTION

Improper installation and use may result in property damage.

- Fill tank with water before operation.

Never use this water heater unless it is completely full of water. To prevent damage to the tank and heating element, the tank must be filled with water. Water must flow from the hot water faucet before turning “ON” power. The manufacturer will not warrant any elements damaged by failure to follow instructions.

14. Check element for water leaks. If leakage occurs, tighten element or repeat Steps 2 and 3, remove element and reposition gasket. Then repeat Steps 10 through 14.
15. Reconnect the two wires to the element and then check to make sure the thermostat remains firmly against the surface of the tank.

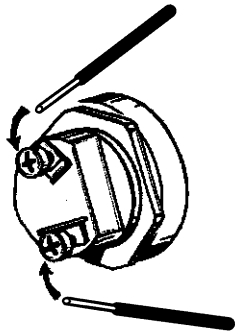

FIGURE 20.

16. Replace terminal cover on thermostat making sure the locking tabs on the terminal cover are in place.
17. Fold down the insulation so that it covers the thermostat and element, see Figure 21.
18. Replace outer door.
19. Turn “ON” electric power to water heater.

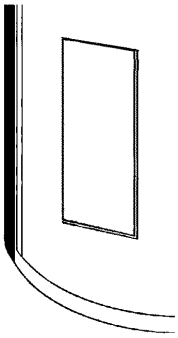

FIGURE 21.

DRAIN VALVE WASHER REPLACEMENT

(See Figure 22)

1. Follow “Draining” instructions.
2. Turning counter clockwise ( ), remove the hex cap below the screw handle.
3. Remove the washer and put the new one in place.
4. Screw the handle and cap assembly back into the drain valve and retighten using a wrench. DO NOT OVER TIGHTEN.
5. Follow instructions in the “Filling The Water Heater” section.
6. Check for leaks.

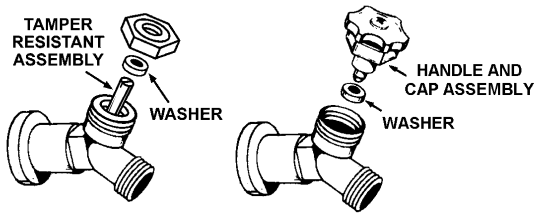

FIGURE 22.

SERVICE

If a condition persists or you are uncertain about the operation of the water heater contact a service agency.

Use this guide to check a “Leaking” water heater. Many suspected “Leakers” are not leaking tanks. Often the source of the water can be found and corrected.

If you are not thoroughly familiar with your water heater and safety practices, contact a qualified installer to check the water heater.

LEAKAGE CHECKPOINTS

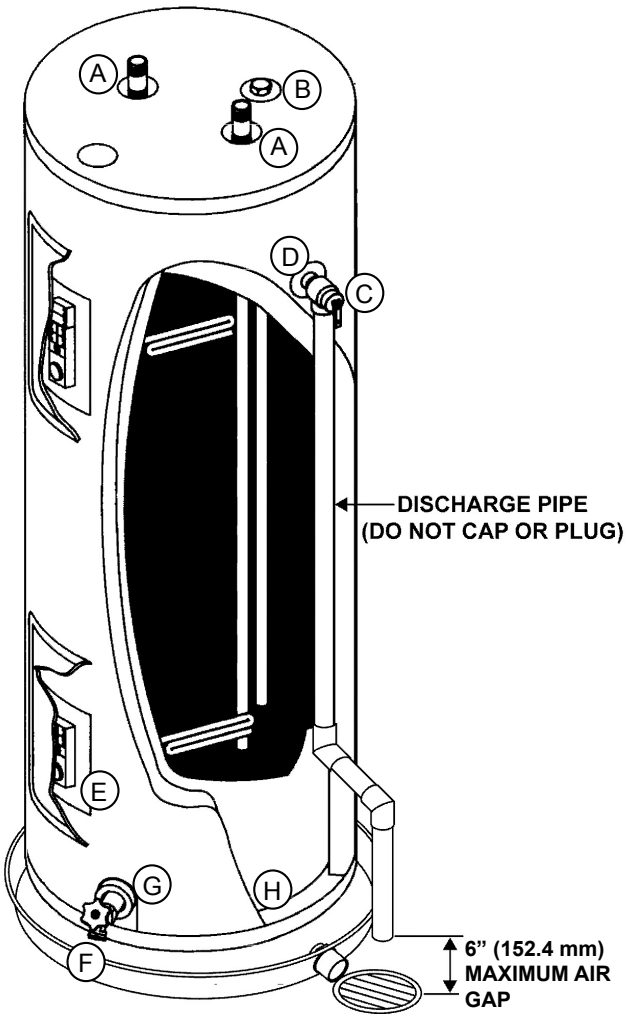

FIGURE 23.

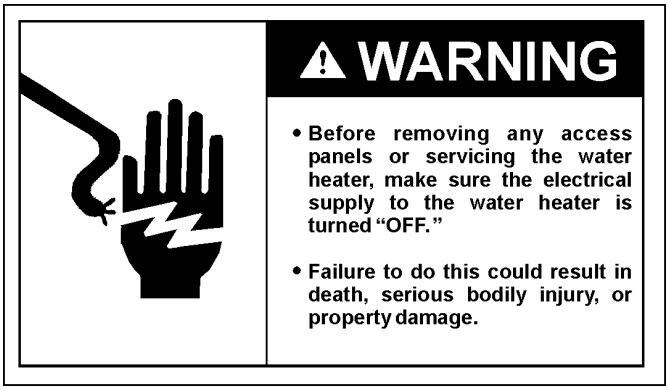

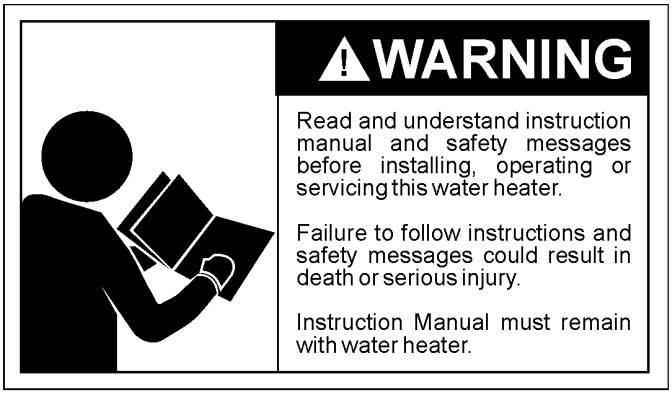

Read this manual first. Then before checking the water heater make sure the electrical power supply has been turned "OFF" before checking the tank for leakage.

*A. Condensation and dripping may be seen on pipes if the water temperature is low in humid weather or pipe connections may be leaking.

*B. The anode rod fitting may be leaking.

C. Small amounts of water from temperature-pressure relief valve may be due to thermal expansion or high water pressure in your area. If the valve is not piped to an open drain the released water could be mistaken for a leaking heater, see "Thermal Expansion" section.

*D. The temperature-pressure relief valve may be leaking at the tank fitting.

E. Water on the side of the tank may be condensation due to the panel or insulation not being in place.

F. Water from a drain valve may be due to the valve being slightly opened.

*G. The drain valve may be leaking at the tank fitting.

*H. Water in the water heater bottom or on the floor may be from condensation, loose connections, or the relief valve. DO NOT replace the water heater until a full inspection of all possible water sources is made and necessary corrective steps taken.

Leakage from other appliances, water lines, or ground seepage should also be checked.

* To check where threaded portion enters tank, insert cotton swab between jacket opening and fitting. If cotton is wet, follow "Draining" instructions in the "Periodic Maintenance" section and then remove fitting. Put pipe dope or teflon tape on the threads and replace. Then follow "Filling the Water Heater" instructions in the "Installing the New Water Heater" section.

TROUBLESHOOTING GUIDELINES

These guidelines should be utilized by a qualified service agent.

Problem	Possible Cause(s)	Corrective Action
WATER LEAKS (See Leakage Checkpoints on 19)	Improperly sealed, hot or cold supply connection, relief valve or drain valve.	Tighten threaded connections.
	Leakage from other appliances or water lines.	Inspect other appliances near water heater.
NO HOT WATER	No power to heater.	Turn on electrical switch. Check for blown fuses or tripped breaker.
	High Temperature Limit Switch open.	Reset. Check for source of trouble and correct.
	Non-functioning upper thermostat.	Replace thermostat.
INSUFFICIENT HOT WATER	Non-functioning thermostats.	Replace thermostats.
	Non-functioning lower element.	Replace element.
	Improper calibration.	Replace thermostats.
	Thermostats set too low.	Set thermostats to desired temperature.
	Sediment or lime in tank.	Drain. Determine if water treatment is needed.
	Heater too small for job.	Install adequate water heater.
	Wrong piping connections.	Correct piping.
	Leaking faucets.	Repair faucets.
	Wasted hot water.	Review and reduce hot water consumption.
	Long runs of exposed pipe.	Insulate piping.
	Hot water piping on outside wall.	Insulate piping.
HIGH OPERATION COSTS	Improper Calibration.	Replace thermostats.
	Thermostats set too high.	Set thermostat to desired setting.
	Sediment or lime in tank.	Drain. Flush-Provide water treatment if needed.
	Heater too small for job.	Install adequate heater.
	Wrong piping connections.	Correct piping.
	Leaking faucets.	Repair faucets.
	Wasted hot water.	Review and reduce hot water consumption.
	Long runs of exposed piping.	Insulate piping.
	Hot water piping in exposed wall.	Insulate piping.
SLOW HOT WATER RECOVERY	Non-functioning upper element.	Replace element.
	Non-functioning lower element.	Replace element.
DRIP FROM RELIEF VALVE	Excessive water pressure.	Use Pressure Reducing Valve and Pressure Relief Valve.
	Closed system.	See “Thermal Expansion” in the For Your Information section.
THERMOSTAT DOES NOT SHUT OFF	Non-functioning thermostats.	Replace thermostats.
	Improper calibration.	Replace thermostats.
WATER ODOR	Sulfides in the water.	See “Operational Conditions” in the For Your Information section.
WATER HEATER SOUNDS	Scale accumulation on elements.	Contact dealer to clean or replace elements.

REPAIR PARTS LIST

LOWBOY AND UPRIGHT ELECTRIC MODELS (Single and Dual Element)

Key No.	Part Description
1	Temperature-Pressure Relief Valve
2	Secondary Anode Rod/Nipple w/Heat Trap*
3	Element w/Gasket
4	Element Gasket
5	Lower Outer Door
6	Terminal Cover (Double Element)
7	Upper Thermostat w/Hi Limit (Double Element)
8	Terminal Cover
9	Lower Thermostat w/Hi Limit
10	Terminal Cover
11	Lower Thermostat
12	Thermostat Bracket (ea.)
13	Drain Valve
14	Primary Anode
15	Dip Tube
16	Nipple w/Heat Traps*
17	Upper Outer Door
18	Base Pan w/Side Drain
19	Pipe Insulation*
20	T & P Insulation*
**	Instruction Manual

* If Applicable
** Not Illustrated

Now that you have purchased this water heater, should a need ever exist for repair parts or service, simply contact the company it was purchased from or the manufacturer listed on the rating plate on the water heater.

Be sure to provide all pertinent facts when you call or visit.

Selling prices will be furnished on request or parts will be shipped at prevailing prices and you will be billed accordingly.

The model number of your Water Heater will be found on the rating plate located above or adjacent to outer door.

WHEN ORDERING REPAIR PARTS, ALWAYS GIVE THE FOLLOWING INFORMATION:

- MODEL NUMBER
- SERIAL NUMBER
- VOLTAGE AND ELEMENT WATTAGE
- PART DESCRIPTION

THIS IS A REPAIR PARTS LIST, NOT A PACKING LIST.

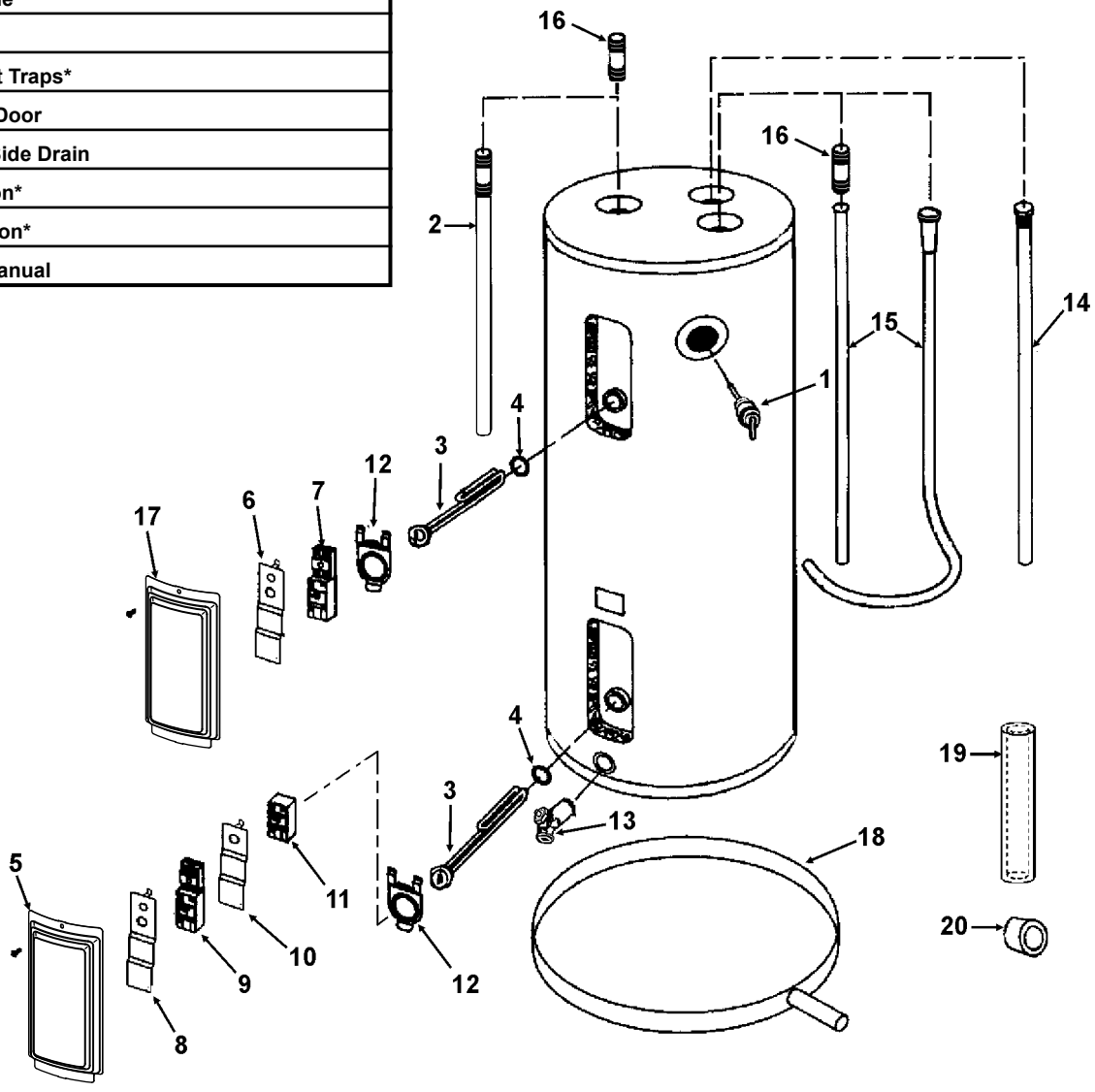

REPAIR PARTS LIST

COMPACT OR MANUFACTURED (MOBILE) HOME ELECTRIC MODELS

Key No.	Part Description		
1	Temperature-Pressure Relief Valve	13	Upper Outer Door
2	Outlet Nipple Assembly	14	Upper Thermostat w/Hi/Limit
3	Inlet Nipple	15	Anode Rod
4	Junction Box Cover	16	Drain Valve
5	Upper and Lower Element	17	Base Pan w/Side Drain
6	Element Gasket	18	Conduit Bracket
7	Thermostat Bracket (ea.)	19	Pipe Insulation*
8	Lower Thermostat	20	T & P Insulation*
9	Terminal Cover	21	Dip Tube
10	Lower Thermostat w/Hi Limit	22	Plug
11	Terminal Cover	**	Instruction Manual
12	Lower Outer Door		

* If Applicable
** Not Illustrated

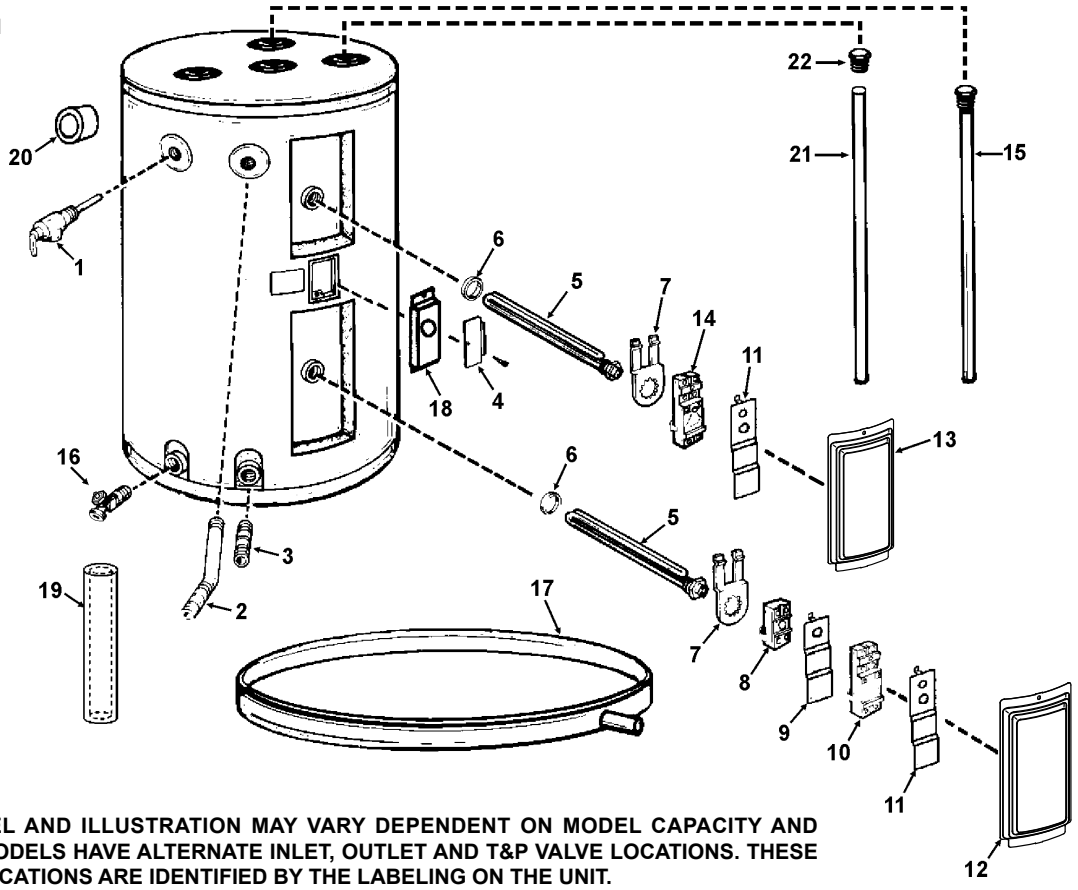

ACTUAL MODEL AND ILLUSTRATION MAY VARY DEPENDENT ON MODEL CAPACITY AND TYPE. SOME MODELS HAVE ALTERNATE INLET, OUTLET AND T&P VALVE LOCATIONS. THESE ALTERNATE LOCATIONS ARE IDENTIFIED BY THE LABELING ON THE UNIT.

Now that you have purchased this water heater, should a need ever exist for repair parts or service, simply contact the company it was purchased from or the manufacturer listed on the rating plate on the water heater.

Be sure to provide all pertinent facts when you call or visit.

Selling prices will be furnished on request or parts will be shipped at prevailing prices and you will be billed accordingly.

The model number of your Water Heater will be found on the rating plate located above or adjacent to outer door.

WHEN ORDERING REPAIR PARTS, ALWAYS GIVE THE FOLLOWING INFORMATION:

- MODEL NUMBER
- SERIAL NUMBER
- VOLTAGE AND ELEMENT WATTAGE
- PART DESCRIPTION

THIS IS A REPAIR PARTS LIST, NOT A PACKING LIST.

REPAIR PARTS LIST

TABLE TOP ELECTRIC MODELS

Key No.	Part Description
1	Porcelain Top
2	Temperature and Pressure Relief Valve
3	Primary Anode Rod
4	Upper Thermostat w/Hi Limit
5	Dip Tube
6	Element w/Gasket
7	Element Gasket
8	Thermostat Bracket (ea.)
9	Terminal Cover
10	Outer Door (ea.)
11	Lower Thermostat w/Hi Limit
12	Terminal Cover
13	Lower Thermostat
14	Drain Access Door
15	Drain Valve
16	Toe Panel
**	Instruction Manual

**** Not Illustrated**

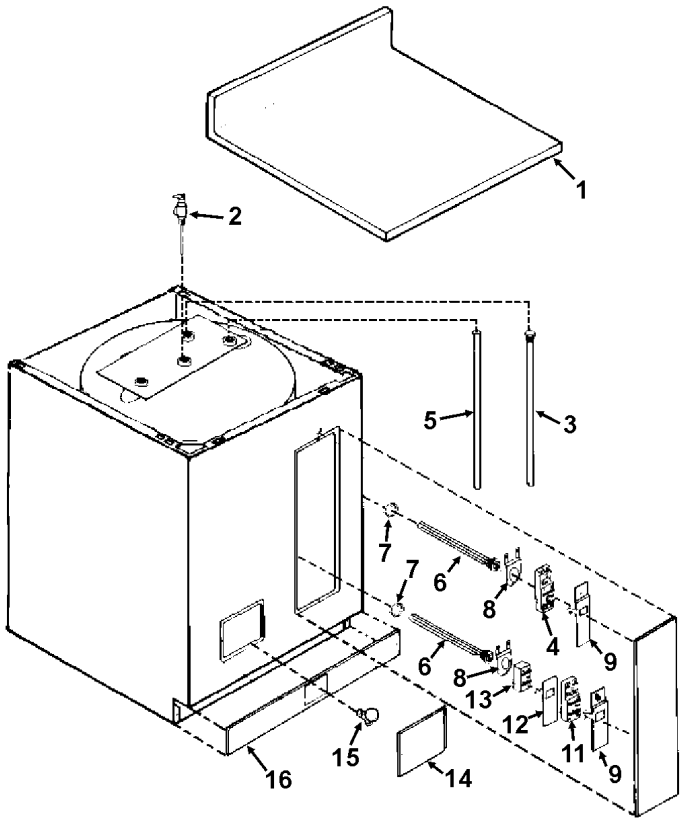

Now that you have purchased this water heater, should a need ever exist for repair parts or service, simply contact the company it was purchased from or the manufacturer listed on the rating plate on the water heater.

Be sure to provide all pertinent facts when you call or visit.

Selling prices will be furnished on request or parts will be shipped at prevailing prices and you will be billed accordingly.

The model number of your Water Heater will be found on the rating plate located under or adjacent to outer door.

WHEN ORDERING REPAIR PARTS, ALWAYS GIVE THE FOLLOWING INFORMATION:

- MODEL NUMBER
- SERIAL NUMBER
- VOLTAGE AND ELEMENT WATTAGE
- PART DESCRIPTION

THIS IS A REPAIR PARTS LIST, NOT A PACKING LIST.

LIMITED RESIDENTIAL ELECTRIC WARRANTY

THIS WARRANTY IS APPLICABLE TO THE ORIGINAL OWNER ONLY. In accordance with the warranty terms and conditions specified below.

A. O. Smith Corporation (the warrantor) will furnish the ORIGINAL OWNER, 1) a replacement A. O. Smith water heater of equivalent size and current model if the glasslined tank in this water heater leaks and, 2) a replacement part for any component part which fails. Sacrificial anode rods are consumable maintenance parts and are excluded from warranty coverage.

THE A. O. SMITH WATER HEATERS REPLACEMENT MODEL OR PART WILL BE WARRANTED FOR ONLY THE UNEXPIRED PORTION OF THE ORIGINAL WARRANTY. The warranty period will be determined by the original date of purchase of the water heater, or in the absence of a Bill of Sale verifying said date, from the date of manufacture indicated on rating plate affixed to this water heater. This warranty is not transferrable and applies to models listed below:

Series	Tank	Parts
Conservationist®	**10-year**	**10-year**
PXHT, PXHS		
ProMax® 10-Year Models	**10-year**	**6-year**
PCRT, PCRS, PCT, PCS, PCL, PCLN, PCJ, PLJC, PLSC		
ProMax® 6-Year Models	**6-year**	**6-year**
ECRT, ECRS, ECT, ECS, ECL, EJC, EJCT, ECJ, ELJC, ESTT, ELSC, ECLN, ECJN, EJCS		
Energy-Saver 5-Year Models	**5-year**	**1-year**
ESM,		

When the water heater has been used for other than single family residential application;

1. The tank warranty shall be reduced to 1 year for 6 year models and to 3 years for 10 year models.
2. The parts warranty shall be reduced to 1 year for all models.

CONDITIONS AND EXCEPTIONS

This warranty shall apply only when the water heater is installed and operated in accordance with 1) all local fire codes and plumbing codes, ordinances and regulations, 2) the printed instructions provided with it, 3) good industry practices, and 4) proper safety practices such as but not limited to a properly sized drain pan if installed in an area where leakage from the tank or its connections would result in damage to the area adjacent to the heater. In addition, a new temperature and pressure relief valve, certified by the Canadian Gas Association must have been properly installed and piped to the nearest drain.

This warranty shall apply only when the heater is:

- owned by the original purchaser;
- installed for indoor operation only;
- used at temperatures not exceeding the maximum calibrated setting of its thermostat;
- used at water pressure not exceeding the working pressure shown on the heater;
- filled with potable water, free to circulate at all times and with the tank free of damaging water sediment or scale deposits;
- used in a non-corrosive and non-contaminated atmosphere;
- used with factory approved anode(s) installed;
- in its original installation location;
- in the United States, its territories or possessions, and Canada;
- sized in accordance with proper sizing techniques for residential water heaters;
- bearing a rating plate which has not been altered, defaced or removed except as required by the warrantor;
- used in an open system or in a closed system with a properly sized and installed thermal expansion tank;
- connected to the proper voltage or:
- operated at the factory rated input;
- installed with no attempted, nor actual modification or alteration of the water heater's design in any way, including but not limited to, the attachment of non- company approved appliances or equipment, including any additional aftermarket equipment introduced into the sealed system.

Any accident to the water heater or any part thereof (including freezing, fire, floods, or lightning), any misuse, abuse or alteration of it, any operation of it in a modified form, any operation of the water heater on desalinated (deionized) water, or any damage caused by attempts to repair tank leaks or parts, will void this warranty. This warranty does not cover water heaters replaced for cosmetic reasons or for reasons of noise, taste, odor, discolored and/or rusty water. This warranty does not apply to water heaters used to heat pools, whirlpools or hot tubs or used for space heating where its sizing does not conform with specifications of the heating component manufacturer.

This warranty gives you specific legal rights, and you may have other rights which vary under the laws of each state. If any provision of this warranty is prohibited or invalid under applicable state law, that provision shall be ineffective to the extent of the prohibition or invalidity without invalidating the remainder of the affected provision or the other provisions of this warranty.

SERVICE AND LABOR RESPONSIBILITY

UNDER THIS LIMITED WARRANTY, THE WARRANTOR WILL PROVIDE ONLY A REPLACEMENT WATER HEATER OR PART THEREOF. THE OWNER IS RESPONSIBLE FOR ALL OTHER COSTS. Such costs may include but are not limited to:

a. Labor charges for service, removal, or reinstallation of the water heater or part thereof.

b. Shipping and delivery charges for forwarding the new water heater or replacement part from the nearest distributor and returning the claimed defective heater or part to such distributor.

c. All cost necessary or incidental for handling and administrative charges, and for any materials and/or permits required for installation of the replacement heater or part.

LIMITATION ON IMPLIED WARRANTIES

Implied warranties, including any warranty of merchantability imposed on the sale of this heater under state law are limited to one year duration for the heater or any of its parts. Some states do not allow limitations on how long an implied warranty lasts, so the above limitations may not apply to you.

CLAIM PROCEDURE

Any claim under this warranty should be initiated with the dealer who sold the heater, or with any other dealer handling the warrantor's products. If this is not practical, the owner should contact: A.O. Smith Corporation, 500 Tennessee Waltz Parkway, Ashland City, TN 37015. Phone: 1.800.323.2636 or visit our website: www.hotwater.com.

For Canadian customers contact: A.O. Smith Enterprises LTD., P.O. Box 310, 768 Erie Street, Stratford, Ontario N5A6T3 or phone: 1.800.265.8520

Replacement Parts may be ordered through authorized servicers or distributors. Refer to your local Yellow Pages for where to call or contact A.O. Smith Corporation, 500 Tennessee Waltz Parkway, Ashland City, TN 37015. Phone: 1.800.433.2545 or visit our website at: www.hotwater.com/parts.

The warrantor will only honor replacement with identical or similar water heater or parts thereof which are manufactured or distributed by the warrantor.
Dealer replacements are made subject to in-warranty validation by warrantor.

PROOF OF PURCHASE AND PROOF OF INSTALLATION DATE ARE REQUIRED TO SUPPORT WARRANTY CLAIM FROM ORIGINAL OWNER. THIS FORM DOES NOT CONSTITUTE PROOF OF PURCHASE OR PROOF OF INSTALLATION.

DISCLAIMERS

NO EXPRESSED WARRANTY HAS BEEN OR WILL BE MADE IN BEHALF OF THE WARRANTOR WITH RESPECT TO THE MERCHANTABILITY OF THE HEATER OR THE INSTALLATION, OPERATION, REPAIR OR REPLACEMENT OF THE HEATER OR PARTS. THE WARRANTOR SHALL NOT BE RESPONSIBLE FOR WATER DAMAGE, LOSS OF USE OF THE UNIT, INCONVENIENCE, LOSS OR DAMAGE TO PERSONAL PROPERTY, OR OTHER CONSEQUENTIAL DAMAGE. THE WARRANTOR SHALL NOT BE LIABLE BY VIRTUE OF THIS WARRANTY OR OTHERWISE FOR DAMAGE TO ANY PERSONS OR PROPERTY, WHETHER DIRECT OR INDIRECT, AND WHETHER ARISING IN CONTRACT OR IN TORT.

Should governmental regulations or industry standards prohibit the Manufacturer from furnishing a comparable model replacement under this warranty, the Owner will be furnished with the closest comparable water heater meeting the then current governmental regulations and industry standards. A supplementary fee may be assessed to cover the additional cost associated with the changes made to meet applicable regulations and standards. The limited warranty is voided if the maintenance procedures listed in the owner's instruction manual are not followed.

IMPORTANT INFORMATION

Model Number _____

Serial Number _____

INSTALLATION INFORMATION

Date Installed _____

Company's Name _____

Street or P.O. Box _____

City, State, and Zip Code _____

Phone Number _____

Plumber's Name _____

A.O. Smith

www.aosmithwaterheaters.com

NOTES:

NOTES:



www.hotwater.com