REVISIONS			
REV	DESCRIPTION	DATE	APPROVED
⚠			

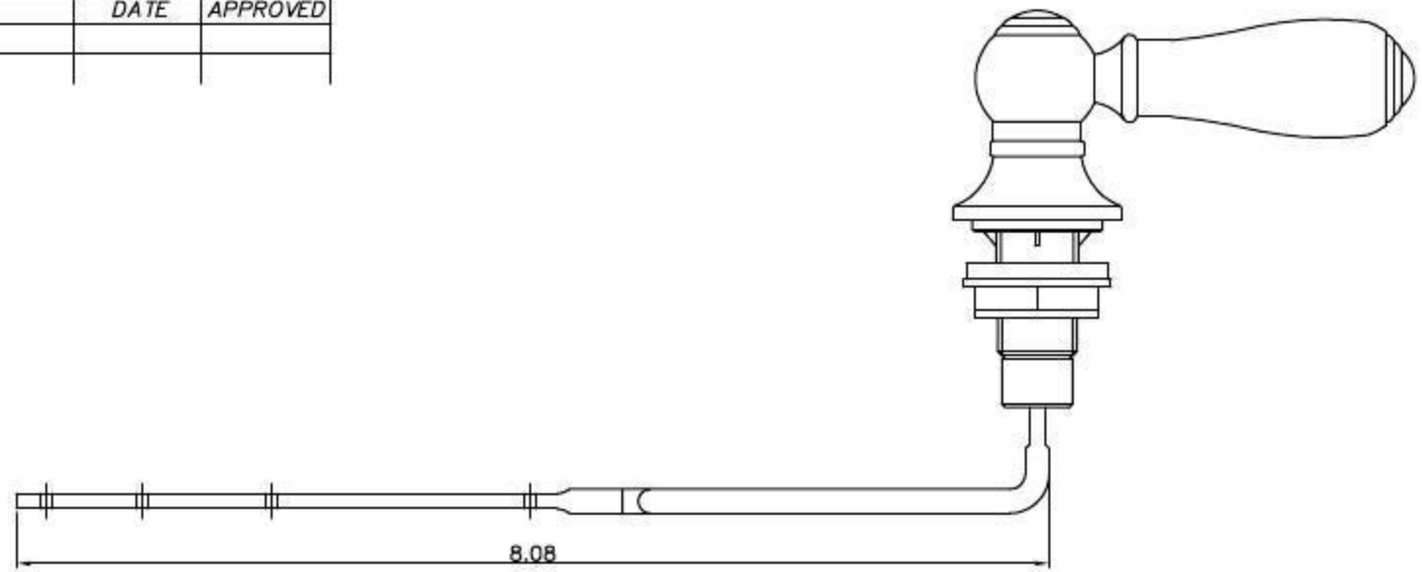

FRONT MOUNT

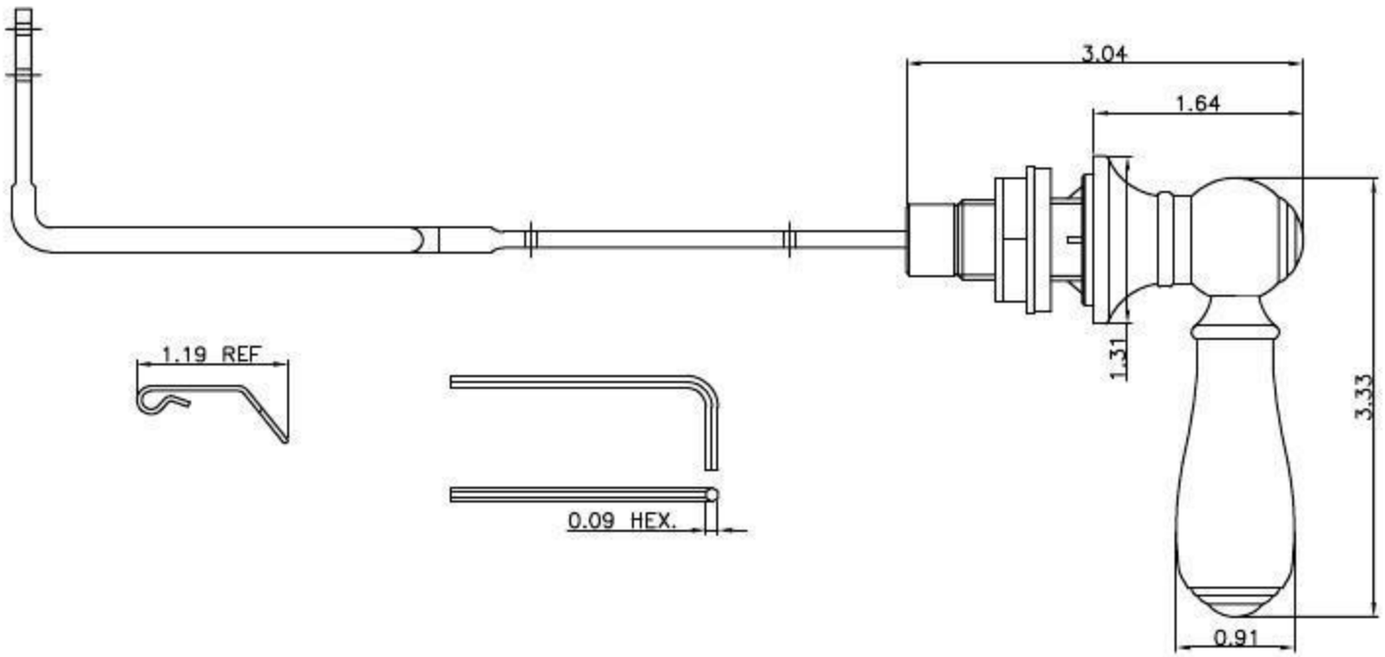

SIDE MOUNT

	DATE	NAME	MACHINE FINISH		TOLERANCE	
DRAWING	11/01/2010	AMY	REMOVE ALL BURRS AND BREAK ALL SHARP EDGES, 0.005" MAX.		X.XX ±0.015" X.XXX ±0.005"	ANGLES ±1/2° FRAC. ±1/64"
CHECKED	11/01/2010	VICTOR	FINISH	Venetian Bronze		
APPROVED			MATERIAL			
APPROXIMATE WEIGHT		000g	UNIT	INCH	SCALE	

The Keeney Manufacturing Company

DRAWING NO	PP836-71VBL
DESCRIPTION	FAUCET STYLE TANK LEVER