Tahoe® | K-2890-8U

20" rectangular undermount bathroom sink

Features

- 8" (203 mm) widespread faucet holes
- Overflow drain
- Single-hole center-mount or 8" centers



Sustainability

Available Colors/Finishes

Color tiles intended for reference only.

	0	White
	NY	Dune

1-800-4KOHLER (1-800-456-4537)
Kohler Co. reserves the right to make revisions without notice to product specifications.
For the most current specification sheet, go to www.kohler.com USA or www.kohler.ca Canada.
4-15-2026 1:5 - US-CA

THE BOLD LOOK OF KOHLER®

Codes/Standards

ADA, CSA B651 compliant when installed to the specific requirements of these regulations.

ADA | CSA B651

ASME A112.19.1/CSA B45.2
ADA
ICC/ANSI A117.1
CSA B651

Technical Information

Number of Deck Holes:	3
Center(s):	8" (203 mm)
With Overflow:	Yes
Drain Hole Diameter:	1-11/16" (43 mm)
Basin Configuration:	Single Bowl
Basin Length:	16" (406 mm)
Basin Width:	12" (305 mm)
Basin Depth:	7-1/4" (184 mm)

Material

- KOHLER® enameled cast iron

Recommended Products/Accessories

K-23726 Drain treatment

K-8998 Adjustable P-trap with tubing outlet, 1-1/4" x 1-1/4"

K-23725 Cast iron cleaner

Warranty

See website for detailed warranty information.

KOHLER® Enameled Cast Iron Kitchen and Bathroom Sink Lifetime Limited Warranty

1-800-4KOHLER (1-800-456-4537)
Kohler Co. reserves the right to make revisions without notice to product specifications.
For the most current specification sheet, go to www.kohler.com USA or www.kohler.ca Canada.
4-15-2026 1:5 - US-CA

THE BOLD LOOK OF KOHLER®

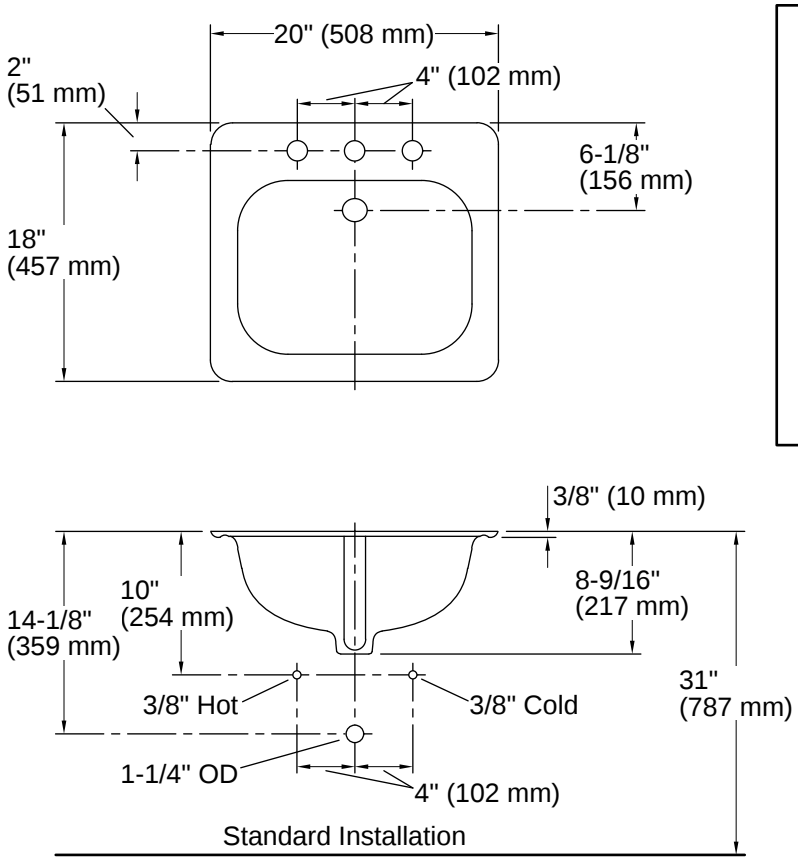

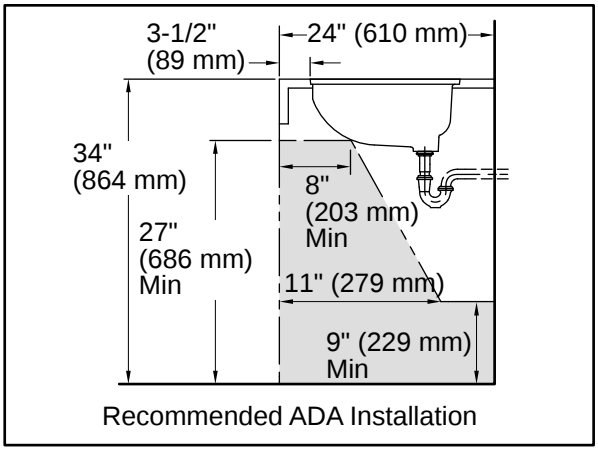

Installation

- Undermount

Installation Notes

Install this product according to the installation instructions.

ADA, CSA B651 compliant when installed to the specific requirements of these regulations.

1-800-4KOHLER (1-800-456-4537)
Kohler Co. reserves the right to make revisions without notice to product specifications.
For the most current specification sheet, go to www.kohler.com USA or www.kohler.ca Canada.
4-15-2026 1:5 - US-CA

THE BOLD LOOK OF KOHLER.