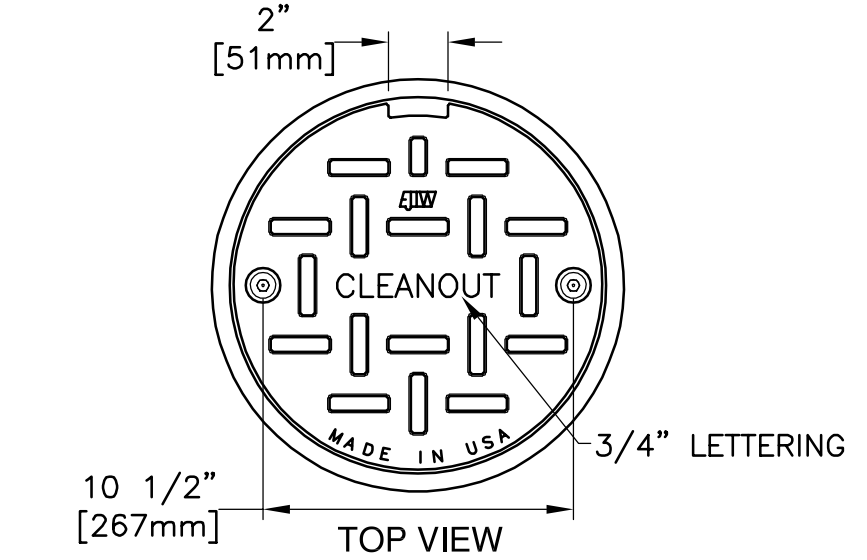

TOP VIEW

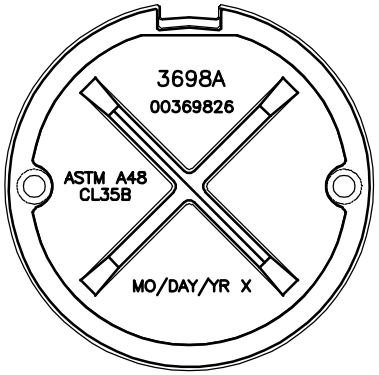

BOTTOM VIEW

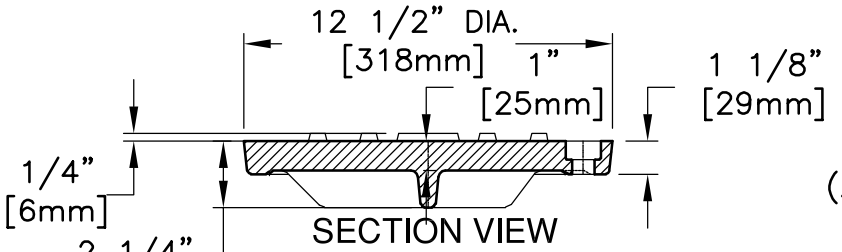

SECTION VIEW

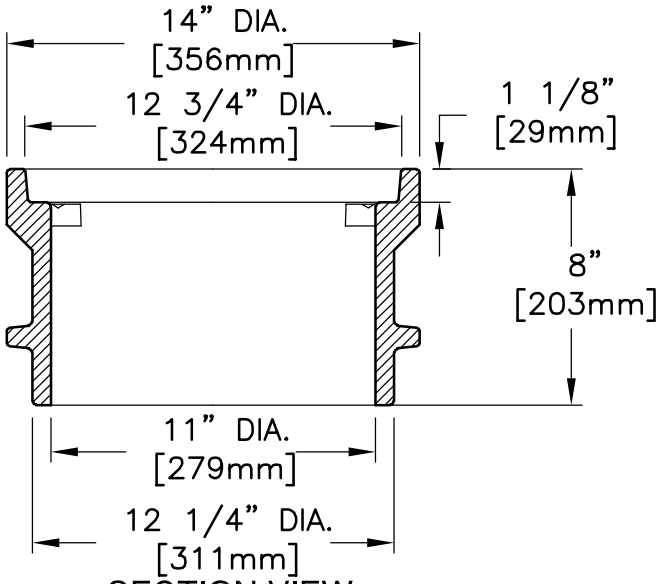

SECTION VIEW

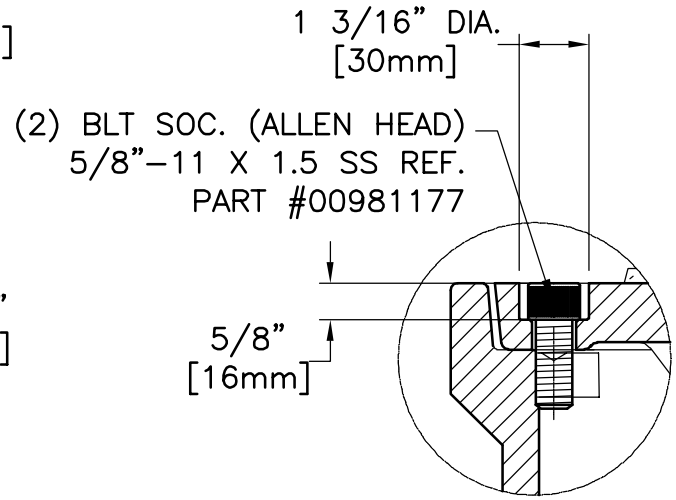

BOLTING DETAIL

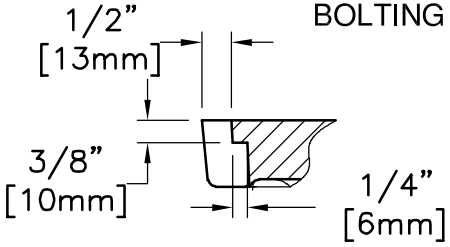

PICKHOLE DETAIL

EAST JORDAN
IRON WORKS, INC.
P.O. BOX 439
EAST JORDAN, MI. 49727
1-800-874-4100
FAX 231-536-4458

DRAWN	DATE
JIJ	01/22/03
APPROVED	DATE

2BLT CLEANOUT COVER & FRAME ASSEMBLY

PRODUCT NO.

00369804

CATALOG NO.

3698A
3698PT

REF. PRODUCT NUMBER

00369810
00369826

EST. WT.

COVER: 36 LBS 16kg
FRAME: 66 LBS 30kg

OPEN AREA

N/A

MAT'L SPEC.

COVER – GRAY IRON
ASTM A48 CL35
FRAME – GRAY IRON
ASTM A48 CL35

LOAD RATING

HEAVY DUTY