# V2432 Assembly

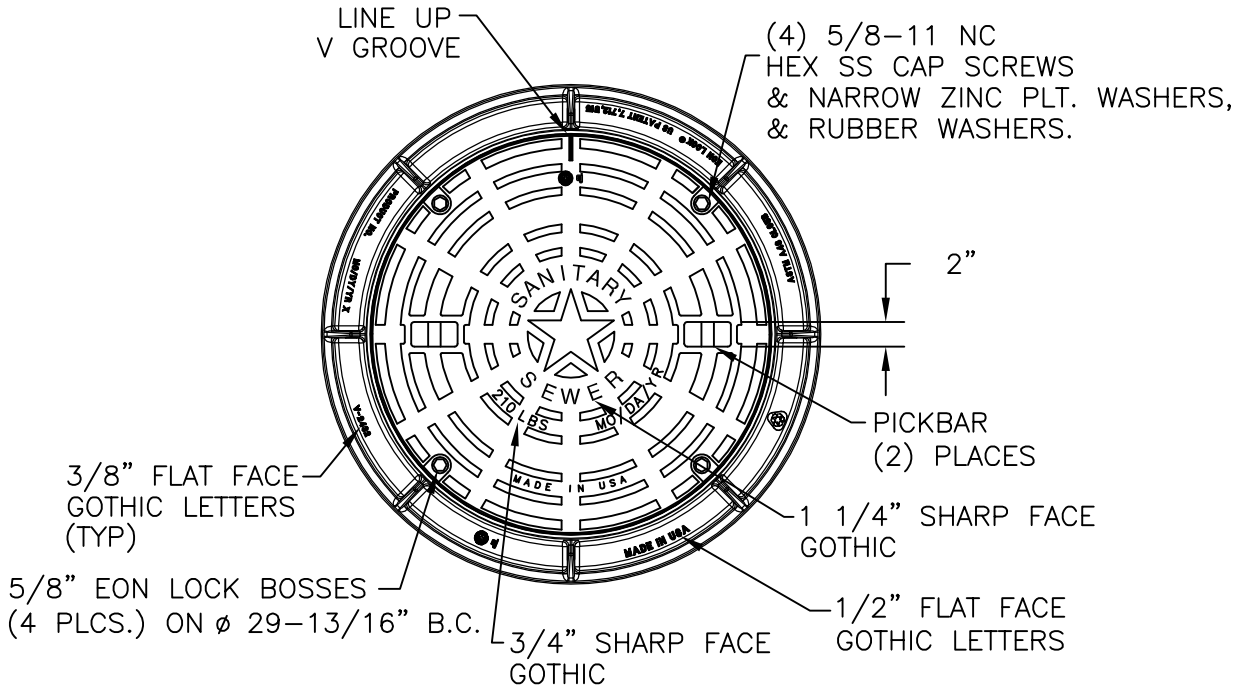


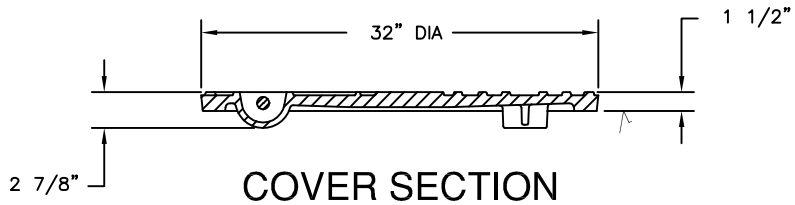


COVER SECTION

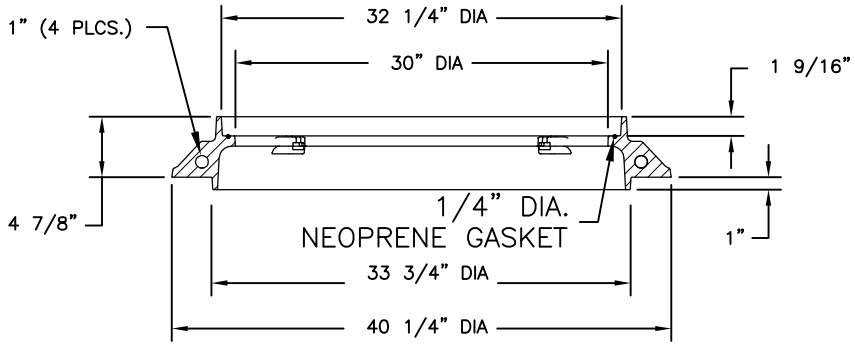


FRAME SECTION

## Product Number

42432070

## Design Features

-Materials
  Frame
    Gray Iron (CL35B)
  Cover
    Gray Iron (CL35B)

-Load Rating
  Heavy Duty
-Open Area
  n/a
-Coating
  Undipped
-√Designates Machined Surface

## Certification

-
- ASTM A48
- H20
-Country of Origin: USA

## Major Components

42432010
42432040

## Drawing Revision

3/15/2000 Designer: DEW
11/20/2019 Revised By: MAH

## Disclaimer

Weights (lbs./kg) dimensions (inches/mm) and drawings provided for your guidance. We reserve the right to modify specifications without prior notice.

CONFIDENTIAL: This drawing is the property of EJ GROUP, Inc., and embodies confidential information, registered marks, patents, trade secret information, and/or know how that is the property of EJ GROUP, Inc. Copyright © 2012 EJ GROUP, Inc. All rights reserved.

## Contact

800 626 4653
ejco.com