FNW7850
STRUT ACCESSORIES

SINGLE CHANNEL 2-HOLE POST BASE

Unistrut post bases are designed to securely fasten strut channel to multiple surfaces, including concrete. Post bases provide stability to strut installation and are available in a variety of finishes and configurations.

FEATURES
- Material is 1-5⁄8" [41mm] wide x 1⁄4" [6mm] thick unless specified.
- Holes are 9⁄16" [14mm] diameter, 13⁄16" [21mm] center to edge on 1-7⁄8" [48mm] centers unless specified.

PRODUCT SPECIFICATIONS

Material
- Carbon steel – ASTM A1011-00 SS GR 33 or ASTM A1011-00CS Type B

Finish
- Z – Electro-Galvanized (standard finish). Electroplating deposits zinc on the surface of the steel by electrolysis from a bath of zinc salts. Recommended for relatively dry indoor use.
- G – GN – Green Powder Coat. A polyester powder coating is electrostatically applied after fabrication. The powder is then baked on creating a 1.38 to 1.77 mil [35–45 µm] thick coating. The hardness of this coating meets ASTM D-3363-74, the impact rating meets ASTM D-2794-93 and the gloss meets ASTM D-523-85. This creates a coating that is resistant to chipping, peeling and corrosion. Available in many colors by special order.
- HD – Hot Dip Galvanized After Fabrication. Fabricated product is dipped in molten zinc and is completely covered on all surfaces. Recommended for outdoor use. Coatings on FNW HD products meet ASTM A123/153. The zinc coating is typically 2.6 mils [66.0 µm] or 1.5 oz. per square foot [0.46 kg per square meter] per side.
- S4 – 304 Stainless steel – ASTM A240 (Type 304)
- S6 – 316 Stainless steel – ASTM A240 (Type 316)
  316 Stainless steel nuts – ASTM A276-03
- Y – Yellow zinc dichromate. A 0.5 mil [12.7 µm] electro-galvanized zinc plating meeting ASTM B633 SC1 Type III is applied to the surface of the metal. Yellow dichromate is applied over the zinc. This results in a yellowish gold appearance and acts as a nonporous barrier sealant that is corrosion resistant and can be painted.

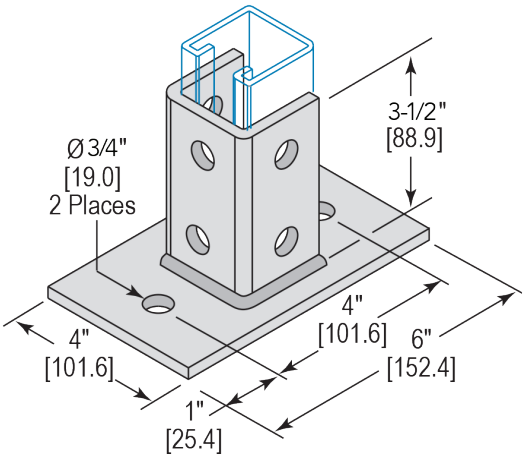

REFERENCE CHART

Catalog Number	Post Width		Thickness		Hole Size		Weight	
	in.	mm	in.	mm	in.	mm	lbs	kg
FNW7850Z	1-5/8	41	1/4	6	9/16	14	2.79	1.27

©2024 Ferguson Enterprises, LLC 1124 7161608

We reserve the right to modify or improve the designs or specifications of our products at any time without notice.