Z1021

WATER SAVER TRAP PRIMER
(1-1/2 [38] COPPER SWEAT WALL CONNECTION)

SPECIFICATION SHEET

TAG _____

Dimensional Data (inches and [mm]) are Subject to Manufacturing Tolerances and Change Without Notice

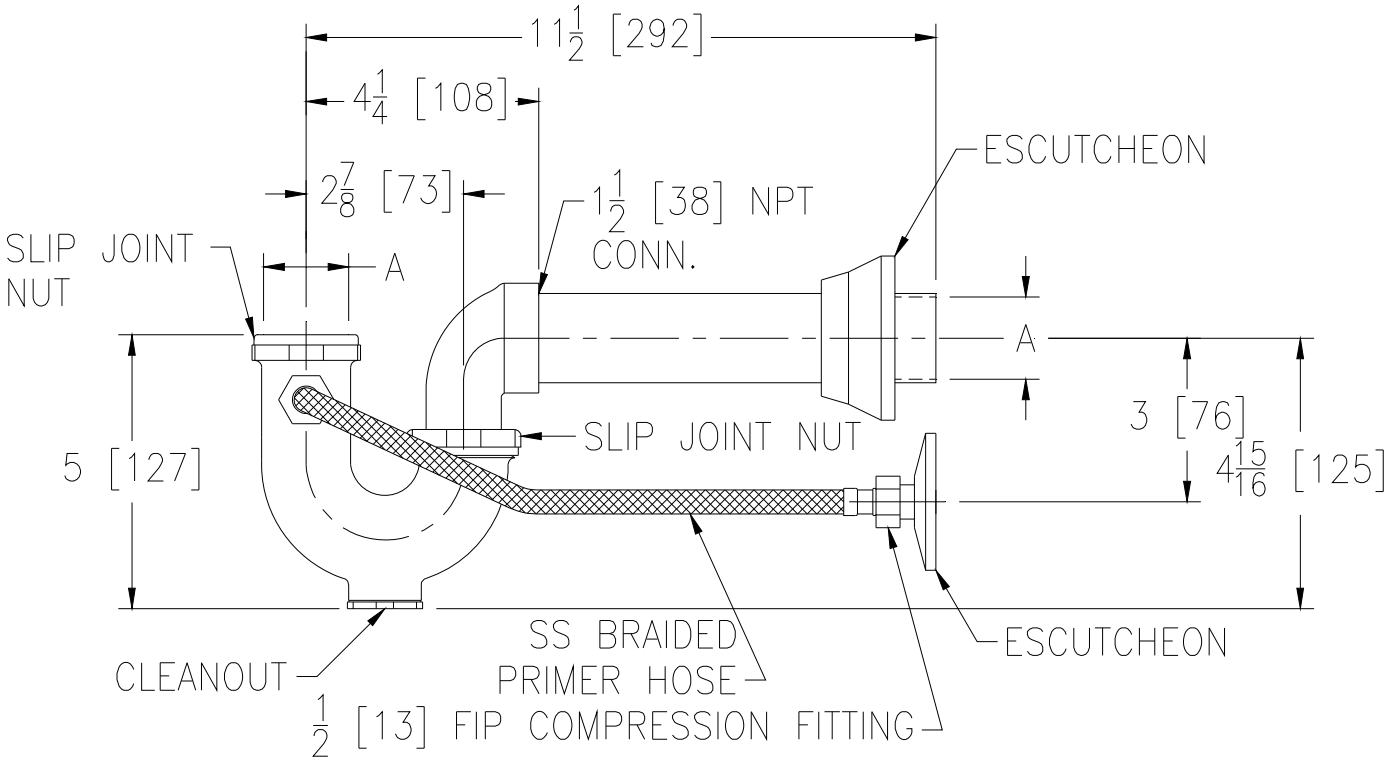

A - Pipe Size
1-1/2 [38]

ENGINEERING SPECIFICATION: ZURN Z1021 Water Saver Trap Primer, chrome plated polished cast brass body with cleanout, ground joint elbow with 1-1/2 [38] NPT outlet, 1-1/2 [38] slip nuts and washers, and reducing washer for 1-1/4 [32] sink tail piece hookup, escutcheons and stainless steel braided primer hose with 1/2 [13] FIP compression fittings.

OPTIONS (Check/specify appropriate options)

PREFIXES

____ Z Polished Chrome Plated*

SUFFIXES

____ -WL One-Piece Waste Elbow (for Slip Joint Wall Connection)

*REGULARLY FURNISHED UNLESS OTHERWISE SPECIFIED

REV. E DATE: 12/10/10 C.N. NO. 102141

DWG. NO. 66387 PRODUCT NO. Z1021

ZURN INDUSTRIES, LLC ♦ SPECIFICATION DRAINAGE OPERATION ♦ 1801 Pittsburgh Ave. ♦ Erie, PA 16514
Phone: 814/455-0921 ♦ Fax: 814/454-7929 ♦ World Wide Web: www.zurn.com
In Canada: ZURN INDUSTRIES LIMITED ♦ 3544 Nashua Drive ♦ Mississauga, Ontario L4V1L2 ♦ Phone: 905/405-8272 Fax: 905/405-1292