HP1LSS4213 Lug 10”- 24” with Gear Class 150

Certified by IAPMO R&T to NSF/ANSI 61 and NSF/ANSI 372 for low lead requirements

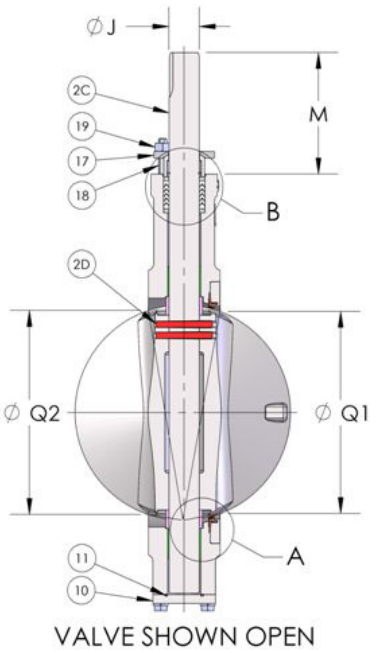

VALVE SHOWN OPEN

10” - 24” 150 LB LUG WITH GEAR			
ITEM NO.	PARTS NAME	MATERIAL	SPECIFICATION
1	BODY	STAINLESS STEEL	ASTM A351 GR. CF8M
2	STEM & DISC ASSEMBLY		
	2B. DISC	STAINLESS STEEL	ASTM A351 GR. CF8M
	2C. STEM	STAINLESS STEEL	17-4PH H1150
	2D. TAPER PIN	18-8 STAINLESS STEEL	COMMERCIAL
3	STEM RETAINER	304 STAINLESS STEEL	COMMERCIAL
4	SEAT RETAINER RING	A. CARBON STEEL	ASTM A515 GR. 70
		B. STAINLESS STEEL	ASTM A240 TY.316
5	SOCKET HEAD CAP SCREW	STAINLESS STEEL	ASTM A193 GR. B8M
6	SEAT	A. PTFE COMMERCIAL	COMMERCIAL
		B. 15% GLS. FLD PTFE	COMMERCIAL
		C. UHMWPE	COMMERCIAL
7	SEAT SPRING	STAINLESS STEEL	COMMERCIAL
8	DISC SPACER	316 STAINLESS STEEL	COMMERCIAL
9	BEARING	STAINLESS STEEL - PTFE COATED	COMMERCIAL
10	BOTTOM CAP	STAINLESS STEEL	ASTM A351 GR. CF8M
11	BOTTOM SEAL	GRAPHITE	COMMERCIAL
12	HEX HEAD CAP SCREW	STAINLESS STEEL	ASTM A193, GR. B8M
13	SPLIT LOCKWASHER	STAINLESS STEEL	COMMERCIAL
14	PACKING V-RING SET	A. PTFE COMMERCIAL	COMMERCIAL
		B. GRAPHITE	COMMERCIAL
15	PACKING WASHER	304 STAINLESS STEEL	COMMERCIAL
16	GLAND FOLLOWER	STAINLESS STEEL	ASTM A351 GR. CF8M
17	GLAND RETAINER	STAINLESS STEEL	ASTM A351 GR. CF8M
18	STUD	STAINLESS STEEL	ASTM A193 GR. B8M
19	HEAVY HEX NUT	STAINLESS STEEL	ASTM A194 GR. 8M
20	MOUNTING PLATE	STAINLESS STEEL	COMMERCIAL
21	HEX HEAD CAP SCREW	STAINLESS STEEL	ASTM A193 GR. B8M
22	SPLIT LOCKWASHER	STAINLESS STEEL	COMMERCIAL
23	HEX HEAD CAP SCREW	STAINLESS STEEL	ASTM A193 GR. B8M
24	SPLIT LOCKWASHER	STAINLESS STEEL	COMMERCIAL
25	GEAR OPERATOR		

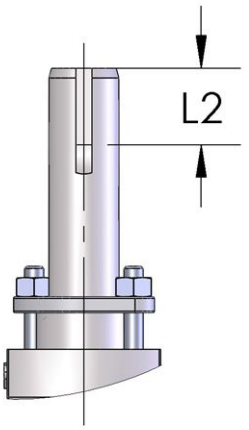

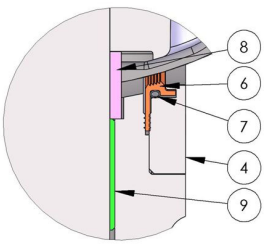

DETAIL A

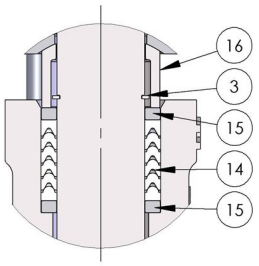

DETAIL B

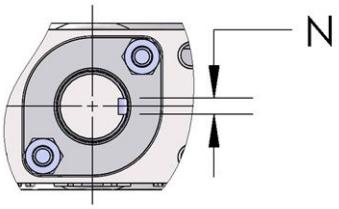

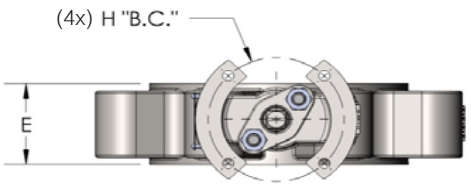

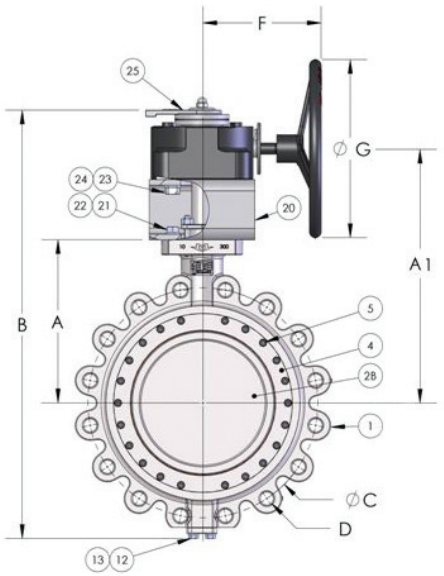

10" CLASS 300 LUG SHOWN

10" - 24" 150 LB LUG WITH GEAR																		
	VALVE DIMENSIONS								HANDWHEEL	TOP WORKS	STEM CONNECTION				CORE DIMS		Bolt Ø
VALVE SIZE	"A" HEIGHT	"A1" HEIGHT	"B" HEIGHT	"C" B.C	"D" TAP	# OF HOLES	"E" FACE	"F"	"G" DIA	"H" B.C	"J" ØSTEM	"L2" LENGTH	"M" LENGTH	"N"	ØQ1	ØQ2	
10"	10.54	13.04	23.15	14.25	7/8-9	12	2.81	7.93	12	4.75	1.12	1.50	1.81	0.25	9.30	9.38	0.56
12"	11.62	17.67	30.40	17.00	7/8-9	12	3.19	7.85	12	4.37	1.37	1.50	5.51	0.31	10.36	10.48	1/2" - 13"
14"	12.00	18.36	31.74	18.75	1-8	12	3.63	8.36	12	4.92	1.50	1.50	5.50	0.38	11.69	11.76	1/2" - 13"
16"	14.00	20.11	35.96	21.25	1-8	16	4.00	10.96	20	6.27	2.00	2.38	6.02	0.50	13.65	13.72	1/2" - 13"
18"	15.00	21.09	38.12	22.75	1-1/8-8	16	4.47	11.95	20	6.27	2.25	2.38	6.02	0.50	15.65	15.72	1/2" - 13"
20"	17.00	24.19	40.03	25.00	1-1/8-8	20	5.00	16.54	16	6.27	2.50	2.38	6.48	0.63	17.57	17.64	1/2" - 13"
24"	19.50	25.69	49.30	29.50	1-1/4-8	20	6.06	16.54	16	7.21	3.00	2.50	6.52	0.75	20.38	20.46	3/4" - 10"

The information presented on this sheet is correct at time of publication. Milwaukee Valve reserves the right to change design and/or materials without notice. For our Installation, Operation and Maintenance Manual and the most current product information go to www.milwaukeevalve.com.
⚠ State of California Prop 65 **WARNING:** Cancer and Reproductive Harm. For more information visit www.p65warnings.ca.gov.

HP Series:
Milwaukee Valve Company
High Performance Butterfly Valves

Features and Benefits

- All valves offer bi-directional bubble-tight sealing at full rated pressure, with lug-bodied valves providing bi-directional dead-end service at full rated pressure.
- The double-offset design provides superior sealing with minimal seat contact and wear.
- The shaft and disc are manufactured as a single piece for maximum strength and Cv.
- The position stop on the disc is internally cast to prevent over-travel, while maintaining optimum disc/seat contact.
- The adjustable stem packing eliminates stem leakage and fugitive emissions.
- The blow-out-proof stem prevents injury and product loss.
- The seat is energized by a combination of pressure and a mechanized design for repeatable and reliable sealing and extended cycle life.
- The stem/disc connection uses a welded taper pin to ensure minimal lost motion and high strength.

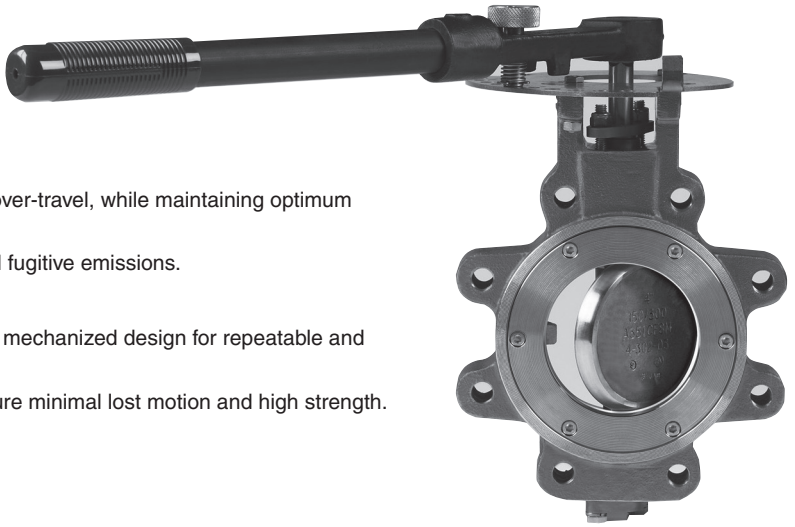

H.P. Lug Pattern

Product Range

Sizes: 2-1/2"- 48" Class 150
Sizes: 2-1/2"- 24" Class 300
Body Configuration: Lug or Wafer

Operators Available

10 Position Lever Handle, Gear Operators, Pneumatic and Electric Actuators

Material of Standard Construction

Body	Carbon Steel or CF8M 316 Stainless Steel
Disc	CF8M 316 Stainless Steel
Stem	17-4 PH Stainless Steel
Bearing	Stainless backed RTFE
Seat	RTFE/Stainless Garter Spring

Specifications

Valve Sizes 2-1/2" through 24"
Flanged Ends Connections per ASME/ANSI B16.5 or B16.47 Series A (sizes 30" - 48").

Valve face to face dimension per MSS-SP-68.

Valve bodies are cast high quality steel, with standard availability in ASTM-A216 WCB CS and ASTM A-351 CF8M SS. Body wall thickness meets ASME/ANSI B16.34 and complies with quality standard for steel castings MSS-SP-55.

High performance valve meets the requirements of MSS-SP-68 for double offset design.

Valve pressure tests meet MSS-SP-61.
Valve testing and inspection meet API 598.

Tagging meets the requirements of MSS-SP-25 and API 609B.

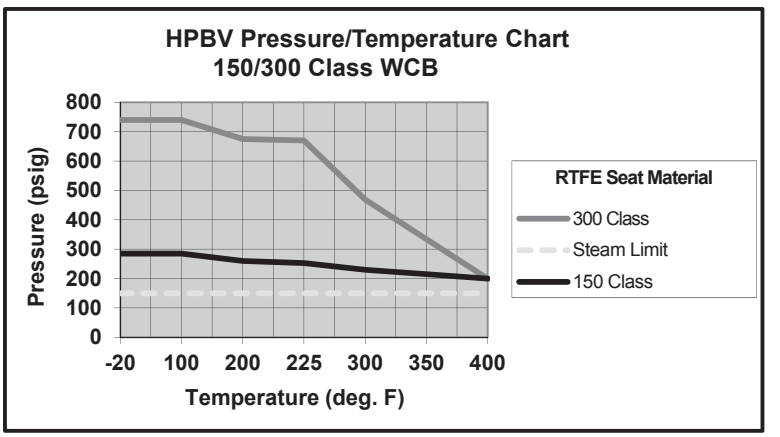

Pressure Ratings*
(Cold Working Pressure)

	2-1/2" through 48" Class 150	2-1/2" through 24" Class 300
Carbon Steel	285 psi	740 psi
Stainless Steel	275 psi	720 psi

*Valve is rated @150 PSI steam for on & off application and 50 PSI modulating service. (Limit Range 30º-70º - No Dwell In Near Closed Position.)

HOW TO ORDER MILWAUKEE VALVES HP SERIES HIGH PERFORMANCE BUTTERFLY VALVE

SERIES	ANSI CLASS	BODY STYLE	BODY MATERIAL	DISC MATERIAL	STEM MATERIAL	SEAT MATERIAL	STEM PACKING	OPERATOR	EXT. OPTIONS	SIZE
XX	X	X	X	X	X	X	X	X	XX	XXX
HP	1-150 3-300	L-LUG W-WAFER	C-WCB S-CF8M	S-CF8M	4-17-4 SS 5-316 SS	1-PTFE 2-RPTFE 4-UHMWPE	1-PTFE G-GRAPHITE	1-BARE STEM 2-LEVER-LOCK 3-GEAR OP	S-Stainless Steel Seat Retainer U-Assembled in USA	025-240

PART NUMBER EXAMPLE

HP1LCS4111 040 = 4 INCH, HIGH PERFORMANCE, CLASS 150, LUG PATTERN, CARBON STEEL BODY, 17-4 STEM, PTFE SEAT, PTFE PACKING, BARE STEM WITH NO EXT OPTIONS

The information presented on this sheet is correct at time of publication. Milwaukee Valve reserves the right to change design and/or materials without notice. For our Installation, Operation and Maintenance Manual and the most current product information go to www.milwaukeevalve.com.
⚠ State of California Prop 65 **WARNING:** Cancer and Reproductive Harm. For more information visit www.p65warnings.ca.gov.