No.	QTY.	DESCRIPTION	MATERIAL
1	1	SPUD	CAST LOW LEAD BRASS ALLOY
2	2	PJ CPLG NUT	CAST BRONZE ASTM B62 ALLOY C83600
3	2	PJ GASKET	ASTM D2000 NITRILE
4	2	PJ WASHER	POLYPROPYLENE

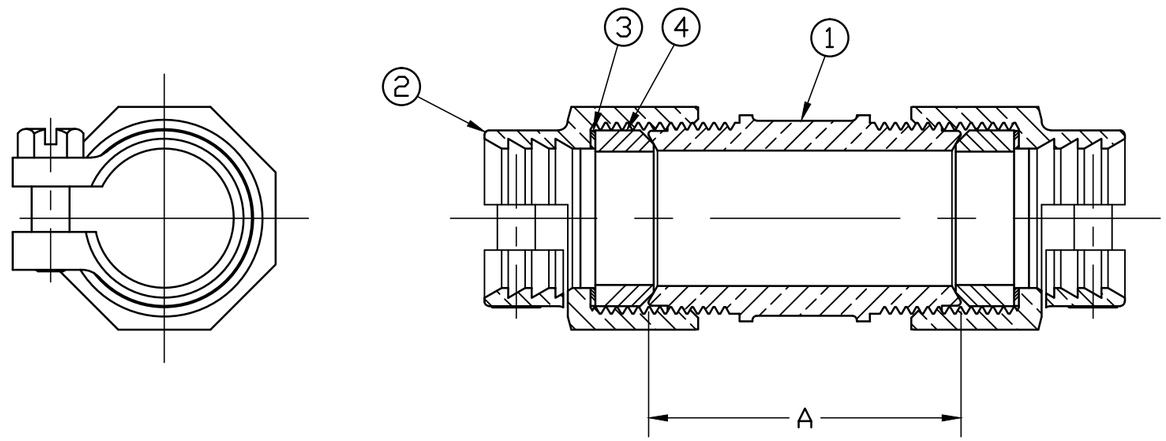

SIZE	A
3/4	2.062
1	2.406
1x3/4	1.835
1-1/2	3.312
1-1/2x1	2.840
2	3.375

ALL WETTED PARTS ARE LOW LEAD BRASS ALLOY

FILEPATH: PROD-ENG\MUELLER\APPROVED\P15403N

REV	ECR	DESCRIPTION	DATE	BY	CHKR

PER EST NO: DXXXX EST FIN WT = 0.0000 lbs

DRFTR	RWB	7/19/13
CHKR		
ENGR		
MGR		
	BY	DATE
STK No:		
MAT'L:		

Mueller Co.

UNLESS OTHERWISE NOTED
SURFACE PREPARATION:
BREAK CORNER(S) ---- .000
SURFACE FINISH -- 000 RMS
TOLERANCE(S):
LINEAR ---------- ± .000
ANGULAR --------- ± 0°00'

THIRD ANGLE PROJECTION

REF. No.

SCALE NONE

DESCR. P-15403 STRAIGHT LLB SERVICE FITTING (PJ CTS x PJ CTS)

DWG NUMBER P15403N

TITLE TO AND OWNERSHIP OF THIS ENGINEERING DATA REMAINS IN Mueller Co. NO USE IS TO BE MADE OF THIS DATA EXCEPT AS SPECIFICALLY AUTHORIZED BY Mueller Co. ASSENT ON THE PART OF THE RECIPIENT TO THESE CONDITIONS IS PRESUMED

DWG NUMBER P15403N

44^2-MRKTG