Installation and Operating Manual

RESIDENTIAL GAS WATER HEATERS

DIRECT VENTED GAS MODELS

NOT FOR USE IN MANUFACTURED (MOBILE) HOMES

A.O. Smith®

www.hotwater.com

DESIGN CERTIFIED®

AHRI CERTIFIED® www.ahridirectory.org

CSA® LLC



WARNING: If the information in these instructions is not followed exactly, a fire or explosion may result causing property damage, personal injury or death.

— **Do not store or use gasoline or other flammable vapors and liquids in the vicinity of this or any other appliance.**

— **WHAT TO DO IF YOU SMELL GAS:**

- **Do not try to light any appliance.**
- **Do not touch any electrical switch; do not use any phone in your building.**
- **Immediately call your gas supplier from a neighbor's phone. Follow the gas supplier's instructions.**
- **If you cannot reach your gas supplier, call the fire department.**

— **Installation and service must be performed by a qualified installer, service agency or the gas supplier.**



⚠ WARNING

Read and understand instruction manual and safety messages before installing, operating or servicing this water heater.

Failure to follow instructions and safety messages could result in death or serious injury.

Instruction manual must remain with water heater.

• For Your Safety •

AN ODORANT IS ADDED TO THE GAS USED BY THIS WATER HEATER.

ALL TECHNICAL AND WARRANTY QUESTIONS: SHOULD BE DIRECTED TO THE LOCAL DEALER FROM WHOM THE WATER HEATER WAS PURCHASED. IF YOU ARE UNSUCCESSFUL, PLEASE CONTACT THE COMPANY LISTED ON THE RATING PLATE ON THE WATER HEATER.

KEEP THIS MANUAL IN THE POCKET ON HEATER FOR FUTURE REFERENCE WHENEVER MAINTENANCE ADJUSTMENT OR SERVICE IS REQUIRED.

TABLE OF CONTENTS

SAFE INSTALLATION, USE AND SERVICE 3
GENERAL SAFETY 4
INTRODUCTION 6
Qualified Installer Or Service Agency 6
Preparing For The Installation 6
INSTALLATION REQUIREMENTS FOR THE COMMONWEALTH OF MASSACHUSETTS 7
TYPICAL INSTALLATION 9
Get To Know Your Water Heater - Gas Models (List Referencing Figures 1-5) 9
Replacement Parts And Deliming Products 10
Combo Heating Inlet And Outlet Side Taps 10
High Limit Controls (Energy Cut Off) 10
Thermostat/Water Temperature
LOCATING THE NEW WATER HEATER 11
Facts To Consider About The Location 11
External/Internal Damage 11
Air Requirements 12
Confined Space Installations 12
Clearances To Combustibles
Floors With Carpeting
Clearance For Servicing
Chemical Vapor Corrosion 12
Storage Of Flammable Liquids 13
Insulation Blankets 13
Water Piping 14
Water Pressure
Mixing Valves
INSTALLING THE NEW WATER HEATER 15
Water Piping Installation 15
Closed Water Systems 15
Thermal Expansion 15
Temperature-Pressure Relief Valve 16
T&P Valve Discharge Pipe Requirements:
Temperature-Pressure Relief Valve And Pipe Insulation
Filling The Water Heater 17
Space Heating And Potable Water Systems 18
Combo Heating 19
System Requirements
Installation
Gas Piping 20
Sediment Trap 21
High Altitude Installations 21
Venting 22
Vent Terminal Clearances 22
DV Termination Safety Cover 23
Vent Connections 23
Locating Clearance Hole For Vent 23
Standard Vent Arrangement 23
Vent Assembly 24
Securing Vent Termination Assembly To The Exterior Wall 24
Vent Restricter Plate 24
Uncompressing The Corrugated Tubing 24
Vent Connection To The Water Heater 25
Offset Vent Arrangement 25
Installation Checklist 27
LIGHTING INSTRUCTIONS 28
TEMPERATURE REGULATION 29
Temperature Regulation 29
Temperature Adjustment
Operating The Temperature Control System 29
Water Temperature Adjustment
Operating Modes And Settings
FOR YOUR INFORMATION 30
External Damage 30
Start Up Conditions 30
Condensate
Smoke/Odor
Thermal Expansion 30
Strange Sounds 31
Operational Conditions 31
Smelly Water
“Air” In Hot Water Faucets
High Water Temperature Shut Off System
MAINTENANCE 32
Housekeeping 32
Flood Damage 32
Venting System Inspection 32
Pilot And Main Burner 32
Burner Flames 33
Servicing The Water Heater 33
Removing And Replacing The Gas Control Valve/Thermostat 33
Removing The Gas Control Valve/Thermostat:
Replacing The Gas Control Valve/Thermostat:
Removing The Manifold/Burner Assembly 33
Removing The Burner From The Manifold/Burner Assembly 34
Natural Gas (Low Nox) & Propane (LP) Gas Burner
Replacing The Pilot/Thermopile Assembly 34
Replacing The Manifold/Burner Assembly 35
Piezoelectric Igniter System 36
Testing The Igniter System 36
Temperature-Pressure Relief Valve Test 36
Draining, Refilling And Flushing 36
To Drain The Water Heater Storage Tank
To Refill The Water Heater Storage Tank
To Flush The Water Heater Storage Tank
Drain Valve Washer Replacement 37
Anode Rod Maintenance 37
To Remove The Anode Rod:
To Install The Anode Rod:
LEAKAGE CHECKPOINTS 39
Service 39
REFERENCE PARTS LISTING 40
TROUBLESHOOTING GUIDELINES 42
NOTES 46

SAFE INSTALLATION, USE AND SERVICE

Your safety and the safety of others is extremely important in the installation, use and servicing of this water heater. Many safety-related messages and instructions have been provided in this manual and on your own water heater to warn you and others of a potential injury hazard. Read and obey all safety messages and instructions throughout this manual. It is very important that the meaning of each safety message is understood by you and others who install, use or service this water heater.

	**This is the safety alert symbol. It is used to alert you to potential personal injury hazards. Obey all safety messages that follow this symbol to avoid possible injury or death.**

DANGER	**DANGER indicates an imminently hazardous situation which, if not avoided, will result in death or injury.**
WARNING	**WARNING indicates a potentially hazardous situation which, if not avoided, could result in death or injury.**
CAUTION	**CAUTION indicates a potentially hazardous situation which, if not avoided, could result in minor or moderate injury.**
CAUTION	**CAUTION used without the safety alert symbol indicates a potentially hazardous situation which, if not avoided, could result in property damage**

All safety messages will generally tell you about the type of hazard, what can happen if you do not follow the safety message and how to avoid the risk of injury.

The California Safe Drinking Water and Toxic Enforcement Act requires the Governor of California to publish a list of substances known to the State of California to cause cancer, birth defects or other reproductive harm and requires businesses to warn of potential exposure to such substances.

This product contains a chemical known to the State of California to cause cancer, birth defects or other reproductive harm. This appliance can cause low level exposure to some of the substances listed in the Act.

IMPORTANT DEFINITIONS

Qualified Installer: A qualified installer must have ability equivalent to a licensed tradesman in the fields of plumbing, air supply, venting and gas supply, including a thorough understanding of the requirements of the National Fuel Gas Code as it relates to the installation of gas fired water heaters. The qualified installer must also be familiar with the design features and use of flammable vapor ignition resistant water heaters and have a thorough understanding of this Installation and Operating manual.

Service Agency: A service agency also must have ability equivalent to a licensed tradesman in the fields of plumbing, air supply, venting and gas supply, including a thorough understanding of the requirements of the National Fuel Gas Code as it relates to the installation of gas fired water heaters. The service agency must also have a thorough understanding of this Installation and Operating manual, and be able to perform repairs strictly in accordance with the service guidelines provided by the manufacturer.

Gas Supplier: The Natural Gas or Propane Utility or service who supplies gas for utilization by the gas burning appliances within this application. The gas supplier typically has responsibility for the inspection and code approval of gas piping up to and including the Natural Gas meter or Propane storage tank of a building. Many gas suppliers also offer service and inspection of appliances within the building.

GENERAL SAFETY



⚠ WARNING

Read and understand instruction manual and safety messages before installing, operating or servicing this water heater.

Failure to follow instructions and safety messages could result in death or serious injury.

Instruction manual must remain with water heater.



⚠ WARNING

Fire Hazard

For continued protection against risk of fire:

- Do not install water heater on carpeted floor.
- Do not operate water heater if flood damaged.

⚠ DANGER

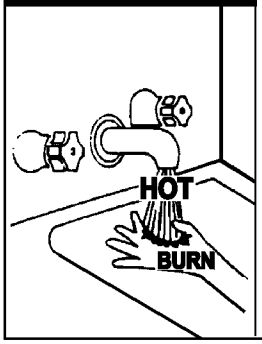

Water temperature over 125°F can cause severe burns instantly resulting in severe injury or death.

Children, the elderly and the physically or mentally disabled are at highest risk for scald injury.

Feel water before bathing or showering.

Temperature limiting valves are available.

Read instruction manual for safe temperature setting.

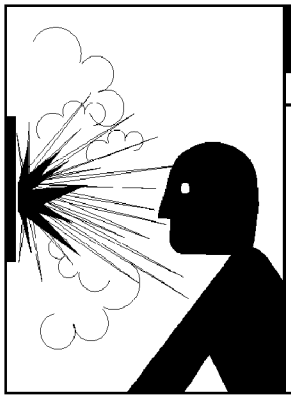

⚠ WARNING

Explosion Hazard

- Overheated water can cause water tank explosion.
- Properly sized temperature and pressure relief valve must be installed in opening provided.

⚠ WARNING

Fire or Explosion Hazard

- Do not store or use gasoline or other flammable vapors and liquids in the vicinity of this water heater, the vent termination hood or any other appliance.
- Avoid all ignition sources if you smell gas.
- Do not expose water heater control to excessive gas pressure.
- Use only gas shown on rating plate.
- Maintain required clearances to combustibles.
- Keep ignition sources away from faucets after extended period of non-use.



Read instruction manual before installing, using or servicing water heater.



GENERAL SAFETY

CAUTION

Improper Installation, use and service may result in property damage.

- Do not operate water heater if flood damaged.
- Inspect anode rods regularly, replace when significantly depleted.
- Install in location with drainage.
- Fill tank with water before operation.
- Properly sized thermal expansion tanks are required on all closed water systems.

Refer to this manual for installation and service.

⚠ WARNING

Breathing Hazard - Carbon Monoxide Gas

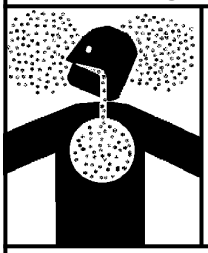

- **Install vent system in accordance with codes.**
- **Do not operate water heater if flood damaged.**
- **For operation above 7,700', a high altitude orifice must be installed.**
- **Do not operate if soot buildup is present.**
- **Do not place chemical vapor emitting products near water heater or vent termination hood.**
- **Gas and carbon monoxide detectors are available.**

Breathing carbon monoxide can cause brain damage or death. Always read and understand instruction manual.

⚠ DANGER

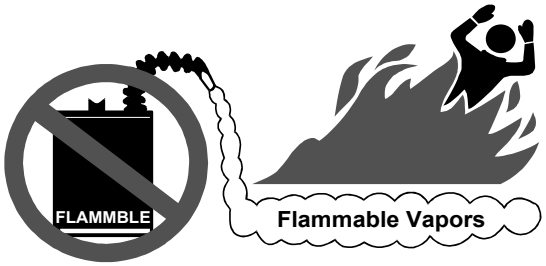

⚠ Vapors from flammable liquids may explode and catch fire causing death or severe burns.

Do not use or store flammable products such as gasoline, solvents or adhesives in the same room or area near the water heater or the vent termination hood. Keep flammable products:
1. far away from heater,
2. in approved containers,
3. tightly closed and
4. out of children's reach.

Water heater has a main burner and pilot. While operating, the pilot flame:
1. is in continuous operation and
2. will ignite flammable vapors.

Vapors:
1. cannot be seen,
2. are heavier than air,
3. go a long way on the floor and
4. can be carried from other rooms by air currents.

Installation: Do not install the water heater or the vent termination hood where flammable products will be stored or used.

INTRODUCTION

Thank You for purchasing this water heater. Properly installed and maintained, it should give you years of trouble free service.
This water heater is suitable for potable water heating and space heating applications but not for space heating only applications.

Abbreviations found in this Installation and Operating manual:

- CSA - Canadian Standards Association
- ANSI - American National Standards Institute
- NFPA - National Fire Protection Association
- ASME - American Society of Mechanical Engineers
- UL - Underwriters Laboratories Inc.
- AHRI - Air Conditioning, Heating and Refrigeration Institute.

This gas-fired water heater is design certified by CSA International, under **Water Heater Standard ANSI Z21.10.1 • CSA 4.1** (current edition).

QUALIFIED INSTALLER OR SERVICE AGENCY

Installation and service of this water heater requires ability equivalent to that of a Qualified Agency (as defined by ANSI below) in the field involved. Installation skills such as plumbing, air supply, venting, gas supply and electrical supply are required in addition to electrical testing skills when performing service.

ANSI Z223.1 2006 Sec. 3.3.83: "Qualified Agency" - "Any individual, firm, corporation or company that either in person or through a representative is engaged in and is responsible for (a) the installation, testing or replacement of gas piping or (b) the connection, installation, testing, repair or servicing of appliances and equipment; that is experienced in such work; that is familiar with all precautions required and that has complied with all the requirements of the authority having jurisdiction."

If you are not qualified (as defined by ANSI above) and licensed or certified as required by authority having jurisdiction to perform a given task, do not attempt to perform any of the procedures described in this manual. If you do not understand the instructions given in this manual do not attempt to perform any procedures outlined in this manual.

PREPARING FOR THE INSTALLATION

1. Read the "General Safety" section of this manual first and then entire manual carefully. If you don't follow safety rules, the water heater will not operate properly. It could cause DEATH, SERIOUS BODILY INJURY AND/OR PROPERTY DAMAGE. This manual contains instructions for installation, operation, and maintenance of the gas-fired water heater. It also contains warnings throughout the manual that you must read and be aware of. All warnings and instructions are essential to proper operation of the water heater and your safety. Since we cannot put everything on the first few pages, READ ENTIRE MANUAL BEFORE ATTEMPTING TO INSTALL OR OPERATE THE WATER HEATER.
2. The installation must conform with these instructions and local code authority having jurisdiction. In absence of local codes, installation must comply with current editions of the **"National Fuel Gas Code", ANSI Z223.1/NFPA 54** and **"National Electrical Code", NFPA 70**. All documents are available from:

   CSA International,
   8501 East Pleasant Valley Road,
   Cleveland, Ohio, United States
   44131-5575.

   NFPA documents are also available from:
   National Fire Protection Association,
   1 Batterymarch Park,
   Quincy, MA 02269.

3. If after reading this manual you have any questions or do not understand any portion of the instructions, call the local gas utility or the manufacturer whose name appears on the rating plate.
4. Carefully plan the place where you are going to put the water heater. Correct combustion, vent action, and vent pipe installation are very important in preventing death from possible carbon monoxide poisoning and fires (see Figure 6). Examine the location to ensure the water heater complies with the "Locating The New Water Heater" section in this manual.
5. NOTE: For California installation, this water heater must be braced, anchored, or strapped to avoid falling or moving during an earthquake. Correct installation procedure instructions may be obtained from:

   California's Office of the State Architect,
   1102 Q Street, Suite 5100,
   Sacramento, CA 95811.
   Instructions can also be downloaded to your computer at www.dsa.dgs.ca.gov..

6. Massachusetts Code requires this water heater to be installed In accordance with Massachusetts 248-CMR 2.00: State Plumbing Code and 248-CMR 5.00.
7. This product is certified to comply with a maximum weighted average of 0.25% lead content as required in some areas.

INSTALLATION REQUIREMENTS FOR THE COMMONWEALTH OF MASSACHUSETTS

COMMONWEALTH OF MASSACHUSETTS

For all side wall terminated, horizontally vented power vent, direct vent and power direct vent gas fueled water heaters installed in every dwelling, building or structure used in whole or in part for residential purposes, including those owned or operated by the Commonwealth and where the side wall exhaust vent termination is less than seven (7) feet above finished grade in the area of the venting, including but not limited to decks and porches, the following requirements shall be satisfied:

INSTALLATION OF CARBON MONOXIDE DETECTORS

At the time of installation of the side wall horizontal vented gas fueled equipment, the installing plumber or gasfitter shall observe that a hard wired carbon monoxide detector with an alarm and battery back-up is installed on the floor level where the gas equipment is to be installed. In addition, the installing plumber or gasfitter shall observe that a battery operated or hard wired carbon monoxide detector with an alarm is installed on each additional level of the dwelling, building or structure served by the sidewall horizontal vented gas fueled equipment. It shall be the responsibility of the property owner to secure the services of qualified licensed professionals for the installation of hard wired carbon monoxide detectors.

In the event that the side wall horizontally vented gas fueled equipment is installed in a crawl space or an attic, the hard wired carbon monoxide detector with alarm and battery back-up may be installed on the next adjacent floor level.

In the event that the requirements of this subdivision can not be met at the time of completion of installation, the owner shall have a period of thirty (30) days to comply with the above requirements provided that during said thirty (30) day period, a battery operated carbon monoxide detector with an alarm shall be installed.

APPROVED CARBON MONOXIDE DETECTORS

Each carbon monoxide detector as required in accordance with the above provisions shall comply with NFPA 720 and be ANSI/ UL 2034 listed and CSA certified.

SIGNAGE

A metal or plastic identification plate shall be permanently mounted to the exterior of the building at a minimum height of eight (8) feet above grade directly in line with the exhaust vent terminal for the horizontally vented gas fueled heating appliance or equipment. The sign shall read, in print size no less than one- half (1/2) inch in size, “GAS VENT DIRECTLY BELOW. KEEP CLEAR OF ALL OBSTRUCTIONS.”

INSPECTION

The state or local gas inspector of the side wall horizontally vented gas fueled equipment shall not approve the installation unless, upon inspection, the inspector observes carbon monoxide detectors and signage installed in accordance with the provisions of 248 CMR 5.08(2)(a) 1 through 4.

EXEMPTIONS

The following equipment is exempt from 248 CMR 5.08(2) (a) 1 through 4:

1. The equipment listed in Chapter 10 entitled “Equipment Not Required To Be Vented” in the most current edition of NFPA 54 as adopted by the Board; and
2. Product Approved side wall horizontally vented gas fueled equipment installed in a room or structure separate from the dwelling, building, or structure used in whole or in part for residential purposes.

MANUFACTURER REQUIREMENTS - GAS EQUIPMENT VENTING SYSTEM PROVIDED

When the manufacturer of Product Approved side wall horizontally vented gas equipment provides a venting system design or venting system components with the equipment, the instructions provided by the manufacturer for installation of the equipment and the venting system shall include:

1. Detailed instructions for the installation of the venting system design or the venting system components; and
2. A complete parts list for the venting system design or venting system.

MANUFACTURER REQUIREMENTS - GAS EQUIPMENT VENTING SYSTEM NOT PROVIDED

When the manufacturer of Product Approved side wall horizontally vented gas fueled equipment does not provide the parts for venting the flue gases, but identifies “special venting systems,” the following requirements shall be satisfied by the manufacturer:

1. The referenced “special venting system” instructions shall be included with the appliance or equipment installation instructions; and
2. The “special venting systems” shall be Product Approved by the Board, and the instructions for that system shall include a parts list and detailed installation instructions.

A copy of all installation instructions for all Product Approved side wall horizontally vented gas fueled equipment, all venting instructions, all parts lists for venting instructions, and/or all venting design instructions shall remain with the appliance or equipment at the completion of the installation.

INSTALLATION GRAPHIC: GAS-FIRED POTABLE WATER HEATING/SPACE HEATING SYSTEM

- **If your water heater will be installed in the Commonwealth of Massachusetts, refer to the following graphic during installation and during modifications to the water supply system.**

TYPICAL MIXING VALVE INSTALLATION
COMBINATION SPACE HEATING / POTABLE WATER HEATING SYSTEM

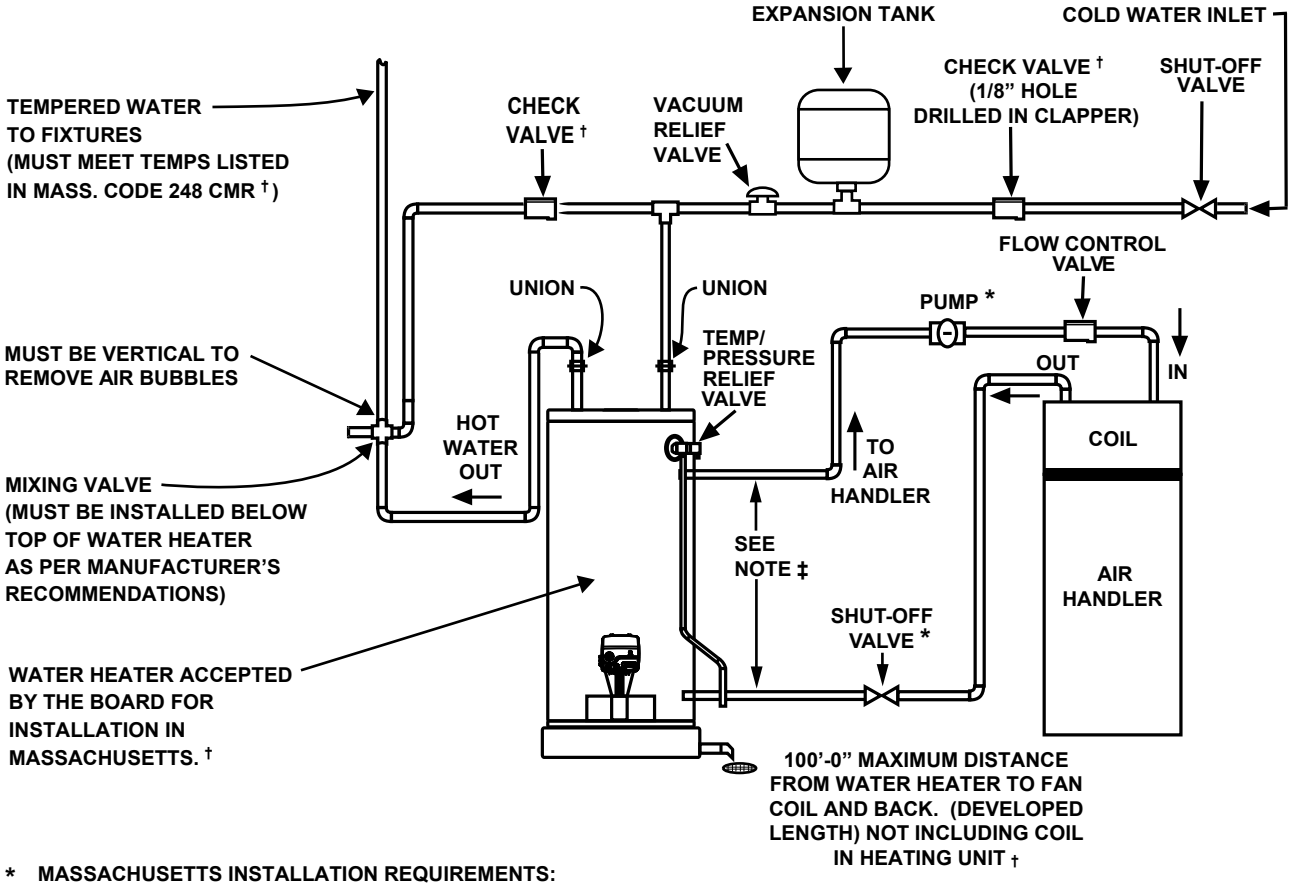

*** MASSACHUSETTS INSTALLATION REQUIREMENTS:**

1.) CONNECT ELECTRONICALLY-CONTROLLED TIMER TO AN ALL-BRONZE PUMP. PUMP MUST ACTIVATE EVERY 6 HOURS FOR 60 SECONDS. TURN PUMP TIMER OFF BEFORE CLOSING PIPING LOOP SHUT-OFF VALVE.

2.) ALL WATER PIPING MUST BE INSTALLED AND INSULATED IN ACCORDANCE WITH MASSACHUSETTS CODE (248 CMR & 780 CMR).

3.) PIPING LOOP BETWEEN WATER HEATER AND AIR HANDLER MUST BE INSTALLED IN COMPLIANCE WITH 248 CMR.

† REQUIRED FOR MASSACHUSETTS.

‡ PIPING FROM THE TOP OF THE WATER HEATER WITH TEES IS ACCEPTABLE.

TYPICAL INSTALLATION

GET TO KNOW YOUR WATER HEATER - GAS MODELS (LIST REFERENCING FIGURES 1-5)

1 Vent Termination Hood
2 Wall Plate
3 ***Vent Pipe
4 Cold Water Inlet Nipple/Diptube
5 **Combo Heating System Supply Outlet (Optional)
6 T&P Valve
7 Gas Control Valve/Thermostat (Honeywell)
8 **Combo Heating System Return Inlet (Optional)
9 *Discharge Pipe
10 Drain Valve
11 Outer Gas Door
12 Manifold Door Assembly (behind outer door) (see Figure 3 & Figure 4)
13 *Floor Drain
14 *Metal Drain Pan
15 Flexible Manifold Tube (see Figure 3 & Figure 4)
16 *Sediment Trap
17 *Ground Joint Union (gas connection)
18 *Main Manual Gas Shut-off Valve
19 *Gas Supply
20 Baffle Assembly
21 Rating Plate
22 Anode (under cap)
23 Hot Water Outlet Nipple (or Optional Nipple/Anode)
24 *Inlet Water Shut-off Valve
25 *Union (water connection)
26 Air Inlet Snorkel
27 Air Tower
28 ***Airbox
29 *Thermal Expansion Tank (required for all closed systems)
30 Sheet Metal Burner (see Figure 3 & Figure 4)
31 Gas Orifice (see Figure 3 & Figure 4)
32 Gas Manifold (see Figure 3 & Figure 4)
33 Manifold Door Gasket (see Figure 3 & Figure 4)
34 Manifold Door (see Figure 3 & Figure 4)
35 Two Piece Grommet With Clip (see Figure 3 & Figure 4)
36 Viewport (see Figure 3 & Figure 4)
37 Flexible Manifold Tube (see Figure 3 & Figure 4)
38 Pilot (see Figure 3 & Figure 4)
39 Thermopile (see Figure 3 & Figure 4)
40 Pilot Shield (see Figure 3 & Figure 4)

*, **, *** see notes on following page

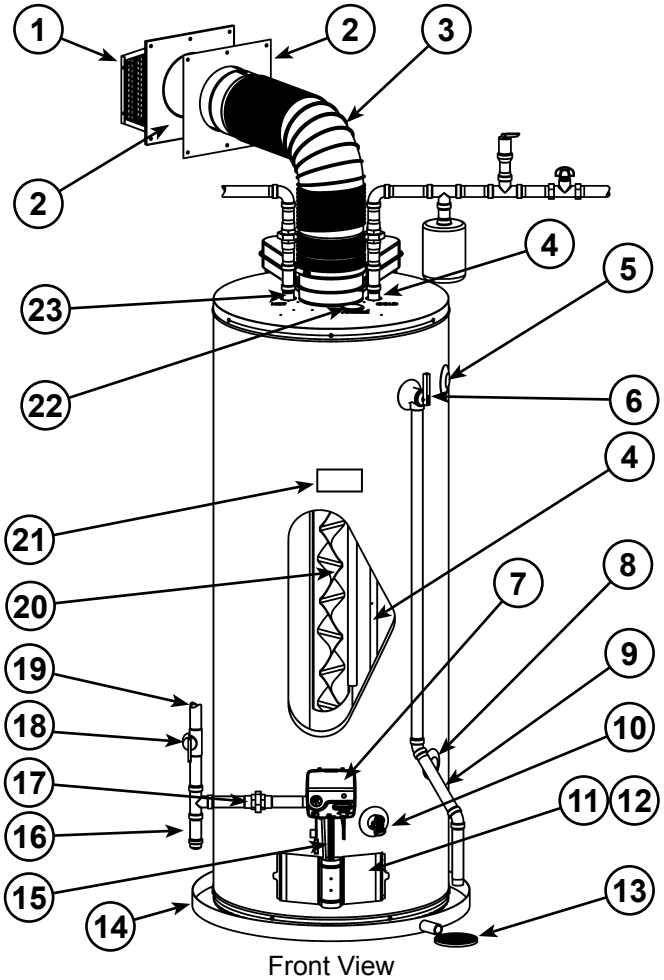

Front View
Figure 1

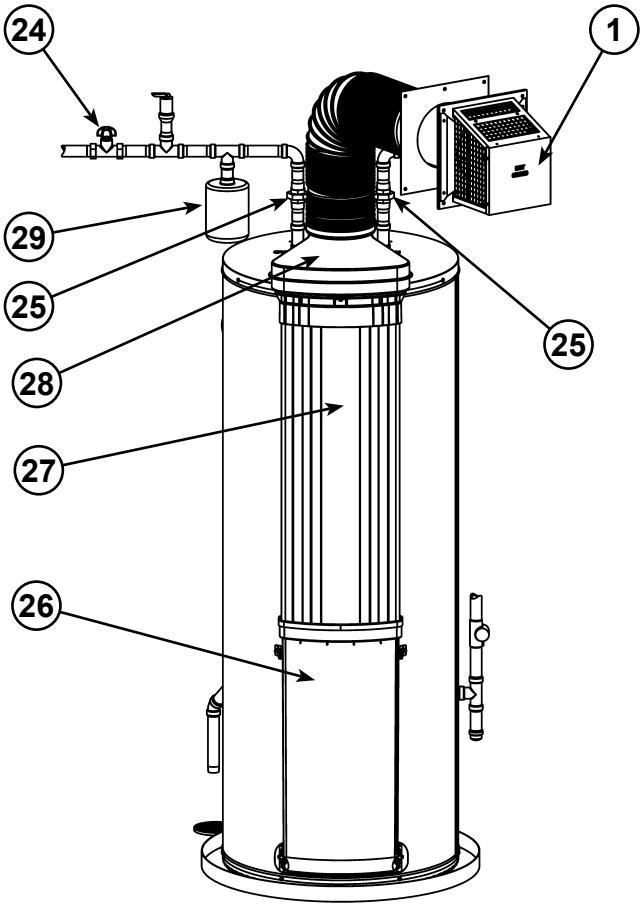

Rear View
Figure 2

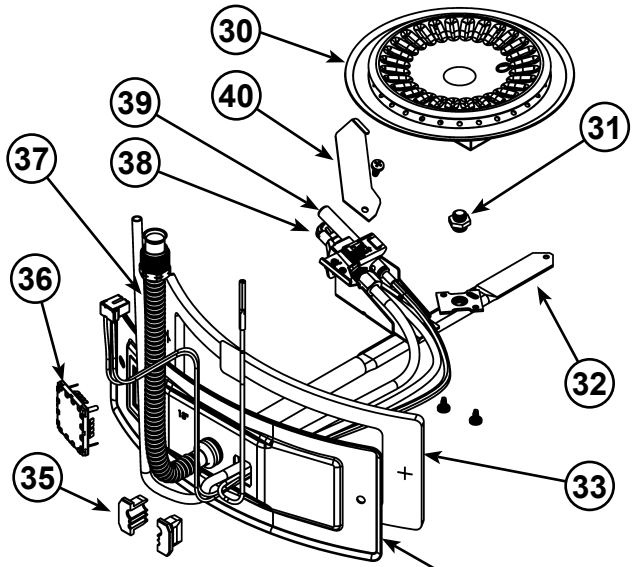

Natural gas and Propane (LP) main burner with igniter assembly for 38k to 42k Btu/hr models

Figure 3

Natural gas and Propane (LP) main burner with igniter assembly for 47k Btu/hr models

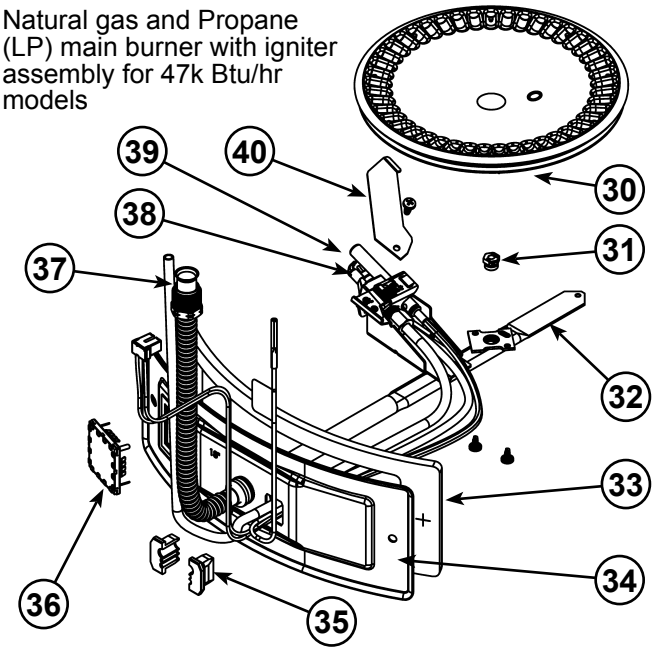

Figure 4

Vacuum relief valve install per local codes (not supplied with heater).

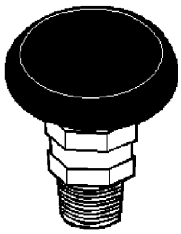

Figure 5

Notes:

* Items not supplied with the water heater.

** The side recirculation loop connections may not be used as the primary water inlet and outlet connections. See "Combo Heating Inlet And Outlet Side Taps" below.

*** During operation the vent pipe and airbox can get hot.

REPLACEMENT PARTS AND DELIMING PRODUCTS

Replacement parts and recommended delimer may be ordered through authorized servicers or distributors. When ordering parts, provide complete model and serial numbers (see rating plate), quantity and name of part desired. Standard hardware items may be purchased locally.

COMBO HEATING INLET AND OUTLET SIDE TAPS

Models equipped with Combo Heating capabilities are shipped with the two side plumbing taps **OPEN** (items 5 and 8 in Figure 1 and see also Figure 8). If the heater is to be operated without using the side taps, these openings **must be closed** with the two pipe plugs supplied with the heaters.

HIGH LIMIT CONTROLS (ENERGY CUT OFF)

Thermostat/Water Temperature

This feature is a part of the gas control valve/thermostat (see Figure 1, item 7) and limits the maximum water temperature. In the event of the water overheating, this safety feature shuts off the fuel supply to the burner.

LOCATING THE NEW WATER HEATER

FACTS TO CONSIDER ABOUT THE LOCATION

Carefully choose an indoor location for the new water heater because the placement is a very important consideration for the safety of the occupants in the building and for the most economical use of the appliance. This water heater is not for use in manufactured (mobile) homes or outdoor installation.

Whether replacing an old water heater or putting the water heater in a new location, the following critical points must be observed:

1. Select a location indoors as close as practical to the vent termination position. Figure 28 shows the venting distances that the heater can be from the outside wall. Ensure the vent termination position maintains the clearances as outlined in Figure 28 thru Figure 30.
2. Selected location must provide adequate clearances for servicing and proper operation of the water heater.
3. Avoid locations that could cause the water heater to freeze from outside air.
4. Avoid locations that expose the water heater to direct sunlight.
5. Keep combustibles such as boxes, magazines, clothes, etc., away from the water heater area.

CAUTION

Property Damage Hazard

- All water heaters eventually leak.
- Do not install without adequate drainage.

Installation of the water heater must be accomplished in such a manner that if the tank or any connections should leak, the flow of water will not cause damage to the structure. For this reason it is not advisable to install the water heater in an attic or upper floor. In all cases, a metal drain pan should be installed under the water heater. Metal drain pans are available at your local hardware store. Such a metal drain pan must have a clearance of at least 1" greater than any point on the water heater's outer jacket and must be piped to an adequate drain. The pan must have a maximum depth of 1.75".

Water heater life depends upon water quality, water pressure and the environment in which the water heater is installed. Water heaters are sometimes installed in locations where leakage may result in property damage, even with the use of a metal drain pan piped to a drain. However, unanticipated damage can be reduced or prevented by a leak detector or water shut-off device used in conjunction with a piped metal drain pan. These devices are available from some plumbing supply wholesalers and retailers, and detect and react to leakage in various ways:

- Sensors mounted in the metal drain pan that trigger an alarm or turn off the incoming water to the water heater when leakage is detected.
- Sensors mounted in the metal drain pan that turn off the water supply to the entire building when water is detected in the metal drain pan.
- Water supply shut-off devices that activate based on the water pressure differential between the cold water and hot water pipes connected to the water heater.
- Devices that will turn off the gas supply to a gas water heater while at the same time shutting off its water supply.

EXTERNAL/INTERNAL DAMAGE

Do not operate the water heater until it has been fully checked out by a qualified technician, if the water heater:

- Has been exposed to fire or damage.
- Displays evidence of sooting.
- Produces steam or unusually hot water.

If the water heater has been flooded it must be replaced.

AIR REQUIREMENTS

For safe operation an adequate supply of fresh, uncontaminated air must be provided for combustion.
This gas-fired water heater is a direct vent model. It connects directly to the outside of the building through the vent termination hood. The hood operates as both the combustion air intake and the heater exhaust port (see Figure 16).
All combustion air is obtained from outside the building through this hood. Ensure the area around the termination hood is always kept clear and that the air supply is not exposed to contamination or flammable vapors.

CONFINED SPACE INSTALLATIONS

This water heater connects to the vent termination hood using the sealed air intake and exhaust piping (see Figure 1 and Figure 2).
During operation this piping can become hot, especially in areas experiencing high ambient temperatures.
When installed in a confined space such as a closet, it is recommended that the confined space be ventilated to minimize the buildup of heat around the heater. Figure 6 and Figure 7 show an examples of ventilating a confined space.

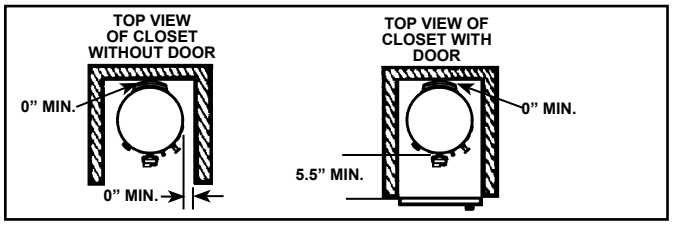

Figure 6

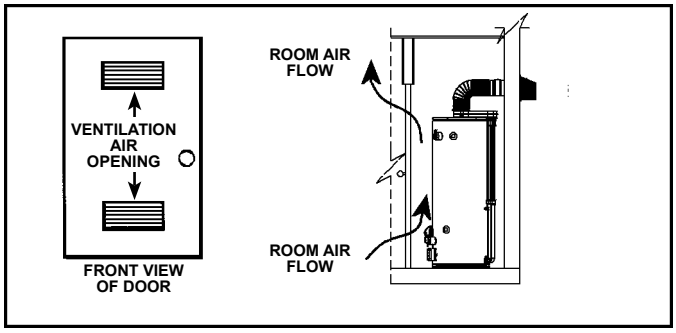

Figure 7

Clearances To Combustibles

Minimum clearances between water heater and combustibles are 0" at the sides and rear, 5.5" from the front and 12" from top. Minimum clearances from vent piping to combustibles is 1" except as noted in Figure 21. If clearances stated on the heater differ from these clearances, install water heater according to clearances stated on the heater (see Figure 6).

Floors With Carpeting

This water heater must not be installed directly on carpeting. Carpeting must be protected by a metal or wood panel beneath the appliance extending beyond the full width and depth of the appliance by at least 3" in every direction, or if the appliance is installed in an alcove or closet, the entire floor must be covered by the panel. Failure to heed this warning may result in a fire hazard.

Clearance For Servicing

Adequate clearance of 24" for servicing this appliance should be considered before installation, such as changing the anodes, etc.

A minimum clearance of 5.5" must be allowed for access to replaceable parts such as thermostats, drain valve and relief valve.
When installing the heater, consideration must be given to proper location. Location selected should be as close to the wall as practicable and as centralized with the water piping system as possible.

CHEMICAL VAPOR CORROSION

CORROSION OF THE FLUEWAYS AND VENT SYSTEM MAY OCCUR IF AIR FOR COMBUSTION CONTAINS CERTAIN CHEMICAL VAPORS. SUCH CORROSION MAY RESULT IN FAILURE AND RISK OF ASPHYXIATION. Spray can propellants, cleaning solvents, refrigerator and air conditioning refrigerants, swimming pool chemicals, calcium and sodium chloride (water softener salt), waxes, and process chemicals are typical compounds which are potentially corrosive. Do not store products of this sort near the heater or the vent termination hood. Air which is brought in contact with the heater or the vent termination hood should not contain any of the chemicals. The Limited Warranty is voided when failure of water heater is due to a corrosive atmosphere. See "Limited Warranty" for complete terms and conditions.

⚠ WARNING

Fire or Explosion Hazard

- Do not store or use gasoline or other flammable vapors and liquids in the vicinity of this water heater, the vent termination hood, or any other appliance.
- Avoid all ignition sources if you smell gas.
- Do not expose water heater control to excessive gas pressure.
- Use only gas shown on rating plate.
- Maintain required clearances to combustibles.
- Keep ignition sources away from faucets after extended period of non-use.



Read instruction manual before installing, using or servicing water heater.



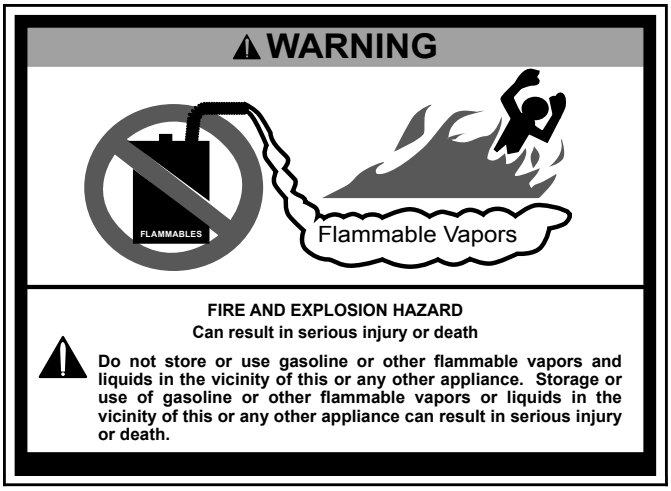

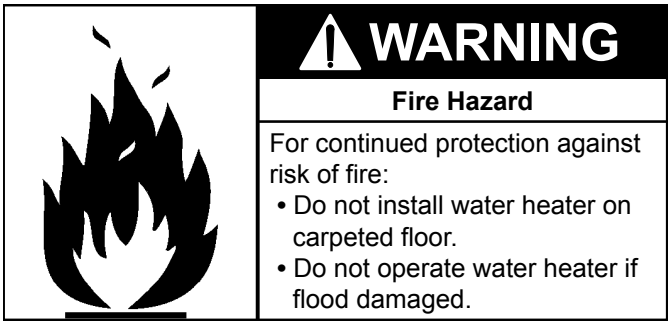

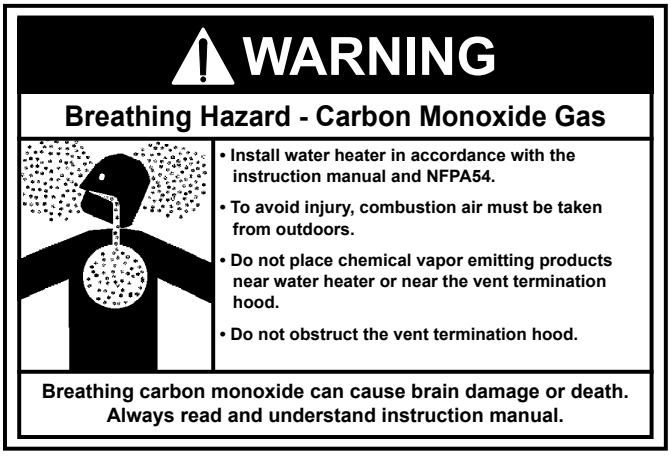

STORAGE OF FLAMMABLE LIQUIDS

Flammable liquids (such as gasoline, solvents, propane (LP or butane, etc.) and other substances (such as adhesives, paints, etc.) emit flammable vapors which can be ignited by a gas water heater's pilot or main burner. The resulting flashback and fire can cause death or serious burns to anyone in the area.

Even though this water heater is a flammable vapors ignition resistant (FVIR) water heater and is designed to reduce the chances of flammable vapors being ignited, gasoline and other flammable substances should never be stored or used in the same vicinity or area containing a gas water heater, the vent termination hood, or other open flame or spark producing appliance. Examples of such locations are garages, storage and utility areas.

The water heater must be located and/or protected so it is not subject to physical damage by a moving vehicle.

Propellants of aerosol sprays and volatile compounds, (cleaners, chlorine based chemicals, refrigerants, etc.) in addition to being highly flammable in many cases, will also react to form corrosive hydrochloric acid when exposed to the combustion products of the water heater. The results can be hazardous, and also cause product failure.

INSULATION BLANKETS

Insulation blankets are available to the general public for external use on gas water heaters but are not necessary with these products. The purpose of an insulation blanket is to reduce standby heat loss encountered with storage tank heaters. Your water heater meets or exceeds the current standards with respect to insulation and standby loss requirements, making an insulation blanket unnecessary. Should you choose to apply an insulation blanket to this heater, you should follow these instructions (For identification of components mentioned below, see Figure 1 thru Figure 5). Failure to follow these instructions will restrict the air flow required for proper combustion and dilution, potentially resulting in fire, asphyxiation, serious personal injury or death.

- Check local codes to determine if insulation blankets are allowed.
- Do not cover the outer door, thermostat or T&P relief valve.
- Do not cover the "Installation And Operating manual". Keep it on the side of the water heater or nearby for future reference.
- Do obtain new warning and instruction labels from the manufacturer for placement on the blanket directly over the existing labels.

WATER PIPING

Water Pressure

The water supply pressure should not exceed 80 psi. If this occurs, a pressure reducing valve with a bypass should be installed in the cold water inlet line. This should be placed on the supply to the entire house in order to maintain equal hot and cold water pressures. See also “Closed Water Systems” and “Thermal Expansion” sections.

Mixing Valves

HOT WATER CAN SCALD:

Water heaters are intended to heat water. Water heated to a temperature which will satisfy space heating, clothes washing, dish washing, cleaning and other sanitizing needs can scald and permanently injure you upon contact.

Short repeated heating cycles caused by small hot water uses can cause a temperature increase of the hot water by 20F° higher than the heater’s temperature settings.

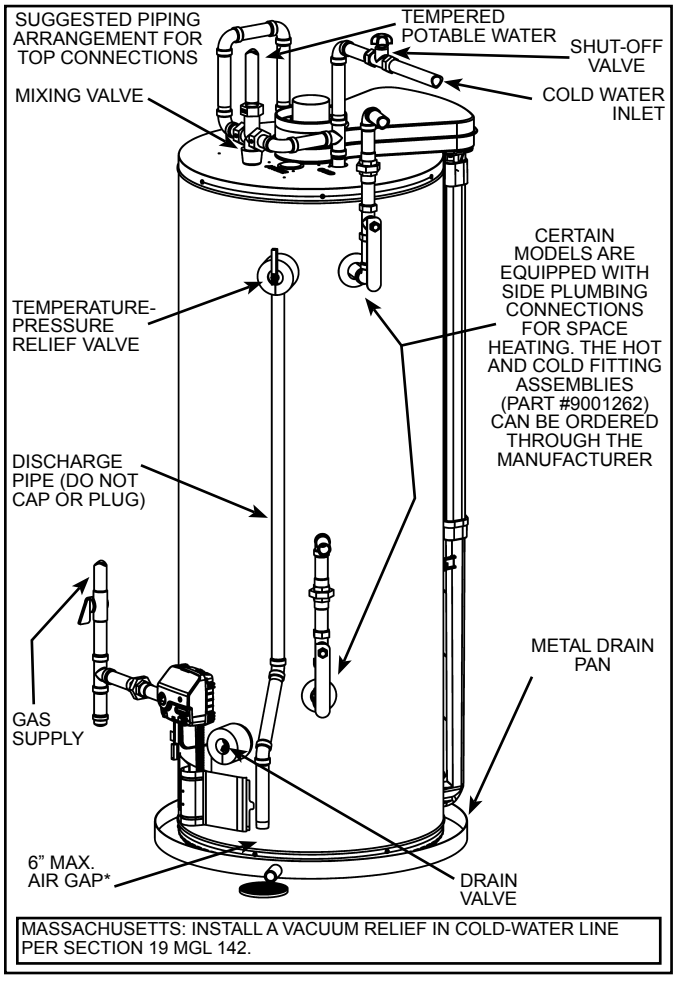

Figure 8

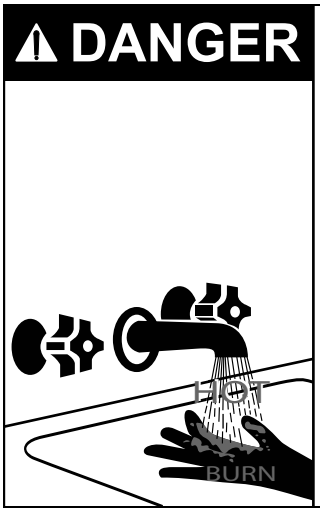

Water temperature over 125°F can cause severe burns instantly resulting in severe injury or death.

Children, the elderly and the disabled and are at highest risk of scald injury.

Feel water before bathing or showering.

Temperature limiting devices such as mixing must be installed when required by codes and to ensure safe temperatures at fixtures.

Some people are more likely to be permanently injured by hot water than others. These include the elderly, children, the infirm and the physically/mentally disabled. Table 1 (published by U.S. Government Memorandum, 1978) shows the approximate time-to-burn relationship for normal adult skin. If anyone using hot water provided by the water heater being installed fits into one of these groups or if there is a local code or state law requiring a certain water temperature at the point of use, then special precautions must be taken (see Figure 8).

Water Temperature °F	Time for 1st Degree Burns (Less Severe Burns)	Time for Permanent Burns 2nd & 3rd Degree (Most Severe Burns)
110	(normal shower temp.)	
116	(pain threshold)	
116	35 minutes	45 minutes
122	1 minute	5 minutes
131	5 seconds	25 seconds
140	2 seconds	5 seconds
149	1 second	2 seconds
154	instantaneous	1 seconds
(U.S. Government Memorandum, C.P.S.C., Peter L. Armstrong, Sept. 15,1978)		

Table 1

In addition to using lowest possible temperature setting that satisfies demand of application, a mixing valve should be installed at the water heater (see Figure 8) or at hot water taps to further reduce system water temperature. Mixing valves are available at plumbing supply stores. Consult a Qualified Installer or Service Agency. Follow mixing valve manufacturer’s instructions for installation of the valves. Before changing the factory setting on the thermostat, read the “Operating The Temperature Control System” section in this manual.

INSTALLING THE NEW WATER HEATER

WATER PIPING INSTALLATION

Note: Water piping and vent piping occupy the space above the water heater. Plan the water piping to ensure it does not cause interference with the vent piping (see "Venting").

- The system should be installed only with piping that is suitable for potable (drinkable) water such as copper, CPVC, or polybutylene. This water heater must not be installed using iron piping or PVC water piping.
- Use only pumps, valves, or fittings that are compatible with potable water.
- It is recommend that only full flow ball or gate valves are used in water piping installations. The use of valves that may cause excessive restriction to water flow is not recommended.
- Use only 95/5 tin-antimony or other equivalent solder. Any lead based solder must not be used.
- Piping that has been treated with chromates, boiler seal, or other chemicals must not be used.
- Chemicals that may contaminate the potable water supply must not be added to the piping system.

Piping, fittings, and valves should be installed according to the installation drawing (see Figure 9). If the indoor installation area is subject to freezing temperatures, the water piping must be protected by insulation.

Important: Heat must not be applied to the water fittings on the heater as they may contain nonmetallic parts. If solder connections are used, solder the pipe to the adapter before attaching the adapter to the hot and cold water fittings.

Important: Always use a good grade of joint compound and be certain that all fittings are drawn up tight.

1. Install the water piping and fittings as shown in Figure 9. Connect the cold water supply (3/4" NPT) to the cold water inlet fitting. Connect the hot water supply (3/4" NPT) to the hot water outlet fitting.

Important: These models may contain energy saving heat traps to minimize the migration of heat to the pipes. Do not remove the inserts within the heat traps.

2. The installation of unions in both the hot and cold water supply lines is recommended for ease of removing the water heater for service or replacement.
3. If installing the water heater in a closed water system, install an expansion tank in the cold water line as specified under "Closed Water Systems" and "Thermal Expansion".
4. Install a shut-off valve in the cold water inlet line. It should be located close to the water heater and be easily accessible. Know the location of this valve and how to shut off the water to the heater.
5. After piping has been properly connected to the water heater, remove the aerator at the nearest hot water faucet. Open the hot water faucet and allow the tank to completely fill with water. To purge the lines of any excess air, keep the hot water faucet open for 3 minutes after a constant flow of water is obtained. Close the faucet, reinstall the aerator and check all connections for leaks. Repair as needed.

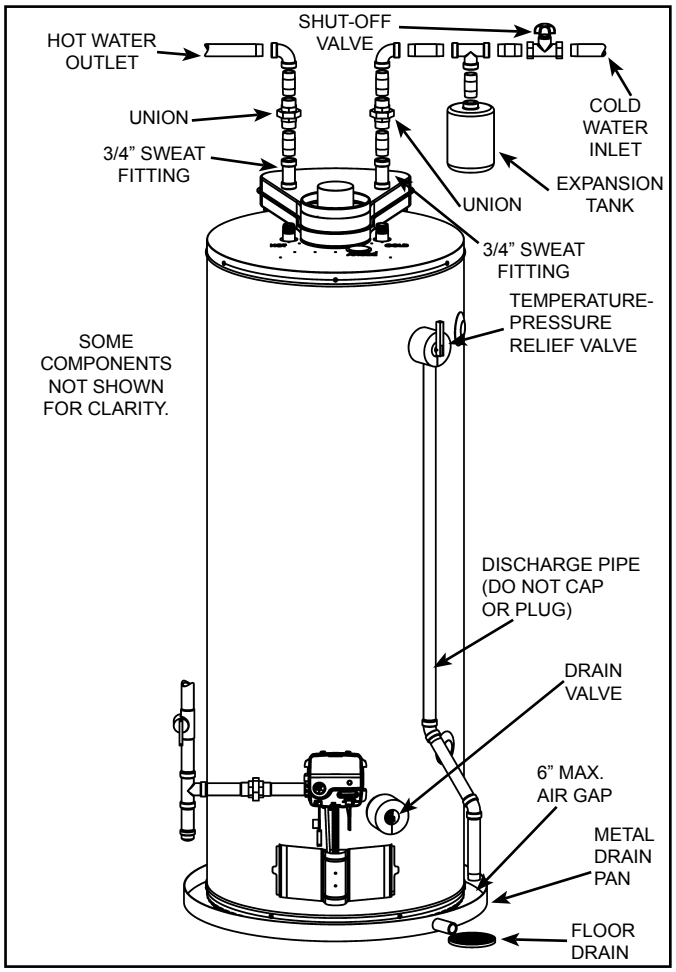

Figure 9

Figure 9 shows typical attachment of water piping to the water heater. The water heater is equipped with 3/4" NPT water connections.

CLOSED WATER SYSTEMS

Water supply systems may, because of code requirements or such conditions as high line pressure, among others, have installed devices such as pressure-reducing valves, check valves, and back flow preventers. Devices such as these cause the water system to be a closed system.

THERMAL EXPANSION

As water is heated, it expands (thermal expansion). In a closed system, the volume of water will increase when heated. As the volume of water increases, there will be a corresponding increase in water pressure due to thermal expansion. Thermal expansion can cause premature tank failure (leakage). This type of failure is not covered under the limited warranty. Thermal expansion can also cause intermittent temperature-pressure relief valve operation: water discharged from the valve due to excessive pressure build up. The temperature-pressure relief valve is not intended for the constant relief of thermal expansion. This condition is not covered under the limited warranty.

A properly-sized and charged thermal expansion tank must be installed on all closed systems to control the harmful effects of thermal expansion. Contact a plumbing service agency or your retail supplier regarding the installation of a thermal expansion tank.

Note: To protect against untimely corrosion of hot and cold water fittings, it is recommended that di-electric unions or couplings be installed on this water heater when connected to copper pipe.

CAUTION

Property Damage Hazard

- Avoid water heater damage.
- Install thermal expansion tank if necessary.
- Do not apply heat to cold-water inlet or hot-water outlet.
- Contact qualified installer or service agency.

TEMPERATURE-PRESSURE RELIEF VALVE

⚠ WARNING

Explosion Hazard

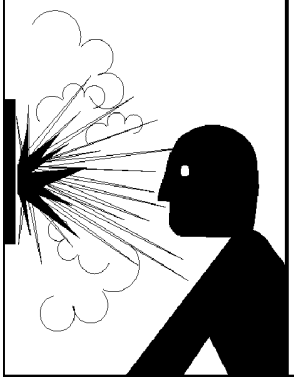

- Temperature-pressure relief valve must comply with ANSI Z21.22-CSA4.4 and ASME code.
- Properly sized temperature-pressure relief valve must be installed in opening provided.
- Do not plug, block, or cap the discharge line.
- Failure to follow this warning can result in excessive tank pressure, serious injury or death.

This water heater is provided with a properly rated/sized and certified combination Temperature-Pressure Relief Valve (T&P valve) by the manufacturer. The valve is certified by a nationally recognized testing laboratory that maintains periodic inspection of production of listed equipment of materials as meeting the requirements for **Relief Valves for Hot Water Supply Systems, ANSI Z21.22-CSA 4.4**, and the code requirements of ASME.

If replaced, the new T&P valve must meet the requirements of local codes, but not less than a combination temperature-pressure relief valve rated/sized and certified as indicated in the above paragraph. The new valve must be marked with a maximum set pressure not to exceed the marked hydrostatic working pressure of the water heater (150 psi) and a discharge capacity not less than the water heater Btu/hr input rate as shown on the water heater's model rating plate.

For safe operation of the water heater, the temperature-pressure relief valve must not be removed from its designated opening nor plugged. The T&P valve must be installed directly into the fitting of the water heater designed for the relief valve. Install discharge piping so that any discharge will exit the pipe within 6"above an adequate floor drain, or external to the building. In cold climates it is recommended that it be terminated at an adequate drain inside the building. Be certain that no contact is made with any live electrical part.

The discharge opening must not be blocked or reduced in size under any circumstances. Excessive length (over 30'), or use of more than four elbows can cause restriction and reduce the discharge capacity of the valve.

No valve or other obstruction is to be placed between the T&P valve and the tank. Do not connect discharge piping directly to the drain unless a maximum of 6"air gap is provided. To prevent bodily injury, hazard to life, or property damage, the relief valve must be allowed to discharge water in adequate quantities should circumstances demand. If the discharge pipe is not connected to a drain or other suitable means, the water flow may cause property damage.

CAUTION

Water Damage Hazard

- Temperature-pressure relief valve discharge pipe must terminate at an adequate drain.

T&P Valve Discharge Pipe Requirements:

- Shall not be smaller in size than the outlet pipe size of the valve, or have any reducing couplings or other restrictions.
- Shall not be plugged or blocked.
- Shall not be exposed to freezing temperatures.
- Shall be of material listed for hot water distribution.
- Shall be installed so as to allow complete drainage of both the temperature-pressure relief valve and the discharge pipe.
- Must terminate a maximum of 6" above a floor drain or external to the building. In cold climates, it is recommended that the discharge pipe be terminated at an adequate drain inside the building
- Shall not have any valve or other obstruction between the relief valve and the drain.

⚠ DANGER

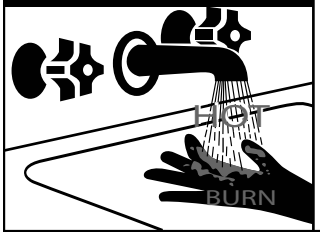

- Burn hazard.
- Hot water discharge.
- Keep clear of temperature-pressure relief valve discharge.

The T&P valve must be manually operated at least once a year. Caution should be taken to ensure

1. no one is in front of or around the outlet of the discharge line, and
2. the water manually discharged will not cause any bodily injury or property damage because the water may be extremely hot.

If after manually operating the valve, it fails to completely reset and continues to release water, immediately close the cold water inlet to the water heater, follow the draining instructions in this manual, and replace the temperature-pressure relief valve with a properly rated/sized new one.
Note: The purpose of a temperature-pressure relief valve is to prevent excessive temperatures and pressures in the storage tank. The T&P valve is not intended for the constant relief of thermal expansion. A properly sized thermal expansion tank must be installed on all closed systems to control thermal expansion, see “Closed Water Systems” and “Thermal Expansion” sections.

Temperature-Pressure Relief Valve And Pipe Insulation

The T&P valve installed on this water heater is covered by insulation to minimize heat loss. The insulation has a hole on the bottom side to accommodate the valve outlet and allow for the piping connection. Do not restrict the outlet opening of the T&P valve.

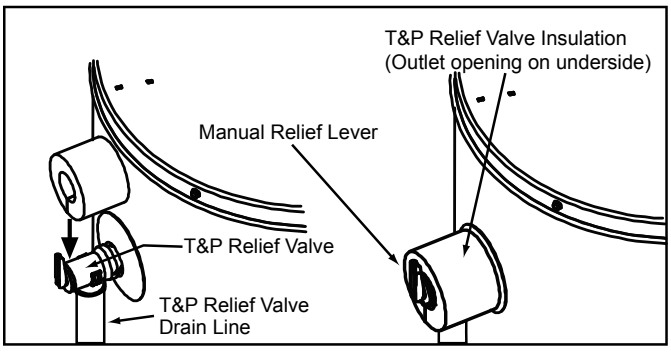

Figure 10

Locate the temperature and pressure relief valve on the water heater (also known as a T&P relief valve) (see Figure 10).

1. Locate the slit running the length of the T&P relief valve insulation.
2. Spread the slit open and fit the insulation over the T&P relief valve (see Figure 10). Apply gentle pressure to the insulation to ensure that it is fully seated on the T&P Relief Valve. Once seated, secure the insulation with duct tape, electrical tape, or equivalent.

Important: The insulation and tape must not block the discharge opening or hinder access to the manual relief lever (Figure 10). Ensure a discharge pipe is installed into the T&P valve discharge opening per the instructions in this manual.

1. Locate the hot water (outlet) and cold water (inlet) pipes to the water heater.
2. Locate the slit running the length of a section of pipe insulation.
3. Spread the slit open and slip the insulation over the cold water (inlet) pipe. Apply gentle pressure along the length of the insulation to ensure that it is fully seated around the pipe. Also, ensure that the base of the insulation is flush with the water heater. Once seated, secure the insulation with duct tape, electrical tape, or equivalent.
4. Repeat steps 2 and 3 for the hot water (outlet) pipe.
5. Add additional sections of pipe insulation as needed.

FILLING THE WATER HEATER

CAUTION

Property Damage Hazard

- Avoid water heater damage.
- Fill tank with water before operating.

- Never use this water heater unless it is completely full of water. To prevent damage to the tank, the tank must be filled with water. Water must flow from the hot water faucet before turning “ON” gas to the water heater.

To fill the water heater with water:

1. Close the water heater drain valve by turning handle to the right (clockwise). The drain valve is on the lower front of water heater (see Figure 9).
2. **Important:** If the heater is equipped with plumbing side taps and they are not connected to piping, ensure the side taps have been closed with pipe plugs.
3. Open all hot water faucets served by the water heater to allow air to escape from the tank and the water piping. Ensure any shut-off valves between the heater and the faucets are in the open position.
4. Open the cold water supply valve to the water heater. Notes:
   - The cold water supply valve must be left open when the water heater is in use.
   - Avoid water leakage when filling the tank. Do not allow the insulation of the water heater to get wet as water can reduce the effectiveness of the insulation.
5. Allow water to run until a constant flow is obtained. This will let air out of the water heater and the piping.
6. Check all water piping and connections for leaks. Repair as needed.

SPACE HEATING AND POTABLE WATER SYSTEMS

This appliance has been design certified as complying with American National Standard/CSA Standard for water heaters and are considered suitable for Water (Potable) Heating and Space Heating. **Note:** This water heater may be used in combination potable water/space heating system. Do not use in a space heating only application.

⚠ WARNING

Toxic Chemical Hazard

• Do not connect to non-potable water system.

Note: Ensure the water heater has been properly sized to accommodate the needs of the hot water demand and space heating load. Undersizing the water heater can result in insufficient hot water, excessive condensation and inefficient operation.

- This water heater should not be connected to any heating systems or components previously used with a non-potable water heating appliance.
- All piping components connected to this unit for space heating applications should be suitable for use with potable water.
- Pumps, valves, piping and fittings must be compatible with potable water.
- Toxic chemicals, such as those used for boiler treatment shall not be introduced into the potable water used for space heating.
- When the system requires water for space heating at temperatures higher than required for domestic water purposes, a mixing valve must be installed. Please refer to Figure 8 for suggested piping arrangement.
- Be sure to follow the manual(s) shipped with the air handler or other type heating system.
- This water heater is not to be used as a replacement for an existing boiler installation.
- Do not use with piping that has been treated with chromates, boiler seal or other chemicals and do not add any chemicals to the water heater piping.
- A properly installed flow control valve is required to prevent thermosiphoning. Thermosiphoning is the result of a continuous flow of water through the air handler circuit during the off cycle. Weeping (blow off) of the temperature-pressure relief valve (T&P) or higher than normal water temperatures are the first signs of thermosiphoning.
- The hot water line from the water heater should be vertical past any mixing valve or supply line to the heating system to remove air bubbles from the system.

COMBO HEATING

This section serves as a guide for the installation and use of "Combo" heating systems utilizing a domestic water heater that has been specifically approved for such use. It is written for those knowledgeable in the required trades and professionals involved in the design and installation of Combo Heating Systems.

It is the responsibility of the installer/designer to follow all applicable codes to ensure the effectiveness and safety of the installation.

System Requirements

The following requirements must be met for the installation of Combo Heating Systems:

1. All components used for the distribution of water in the heating loop must be suitable for potable water. These include all piping, fittings, solder and fluxes, pumps for circulation of water, valves, etc.
2. The water heater must not be connected to a hydronic heating system that has been used previously.
3. No boiler treatment chemicals of any kind shall be introduced into the system.
4. The Combo System components must be selected and sized to meet and maintain the total calculated demands for both domestic service hot water and space heating requirement. The sizing and installation must be performed in accordance with good engineering practice such as **"ASHRAE Handbooks", HRAI's Unified Combo Guidelines, "Hydronics Institute Manuals", ANSI Z223.1, CSA F280, National/Provincial Building Codes**, ANSI and/or codes having jurisdiction.
5. The air handler (fan coil) and/or the circulating pump in a baseboard hydronic loop will require a dedicated 120V circuit. This must be provided and identified for this purpose.
6. All piping between the water heater and the air handler or hydronic baseboard loop must be adequately insulated to reduce heat loss.
7. If the local jurisdiction requires a back-flow preventer in the cold water line, an expansion tank of adequate size must be installed.
8. "Combo" Heating Systems require higher water temperatures than other applications. When the system is used to supply water for Combo Heating applications, a means, such as mixing valve, must be installed to temper the water in order to reduce scald hazard potential (see Figure 11 & Figure 12).

Installation

The heating mode may be one of the following options:

A. A fan coil/air handler (Figure 11).
B. A hydronic baseboard (finned tube) loop/In floor heating (Figure 12).

The following is a list of requirements for the installation of option A or B.

1. Install shut-off valves and unions so that the water heater can be isolated from the heating module should servicing of the water heater become necessary.
2. Install a drain valve at the lowest point of the heating loop so that water can be drained from the heating module without affecting the water heater.
3. If the air handler does not have a venting means at the highest point of the piping arrangement, install an air bleed at the highest point of the plumbing arrangement.

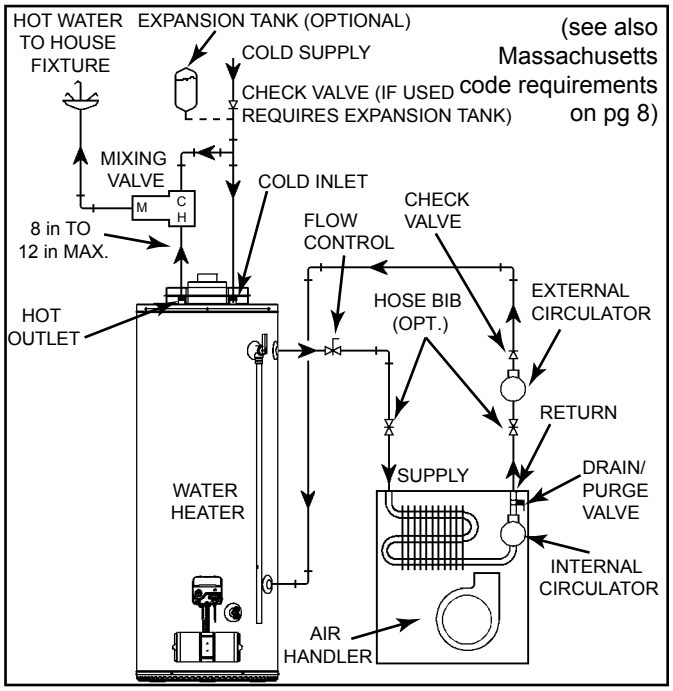

Figure 11

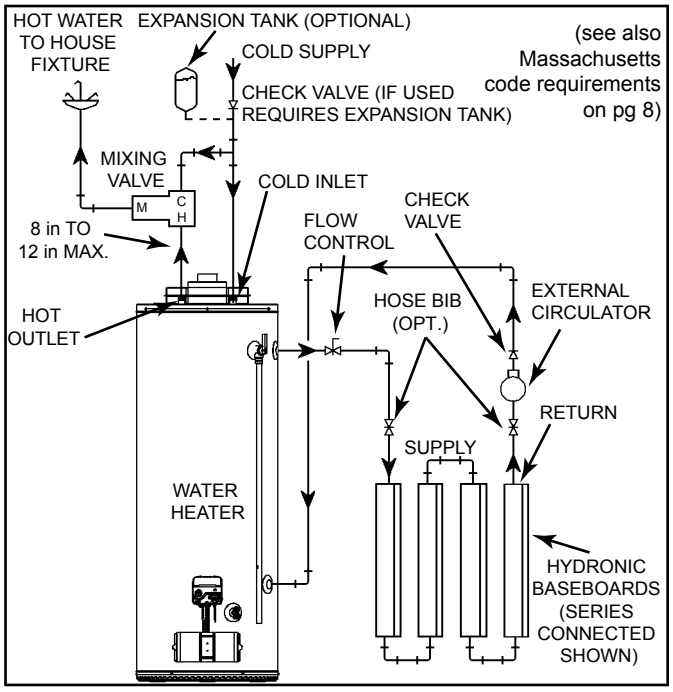

Figure 12

GAS PIPING

⚠ WARNING

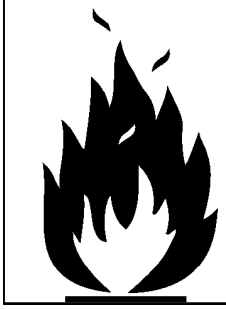

Fire and Explosion Hazard

- Do not use water heater with any gas other than the gas shown on the rating plate.
- Excessive pressure to gas control valve can cause serious injury or death.
- Turn off gas lines during installation.
- Contact qualified installer or service agency.

⚠ WARNING



Explosion Hazard

Have a qualified technician make sure that the L.P. gas operating pressure does not exceed 13" water column.

Failure to do so can result in death, explosion, or fire.

Make sure the gas supplied is the same type listed on the model rating plate. The inlet gas pressure must not exceed 13 inch w.c. for natural gas and propane (LP) gas. The minimum inlet gas pressure shown on the rating plate is that which will permit firing at rated input.

All gas piping must comply with local codes and ordinances or with the "**National Fuel Gas Code" (ANSI Z223.1/NFPA 54)**. Copper or brass tubing and fittings (except that which is certified for gas usage) should not be used.

If the gas control valve/thermostat is subjected to pressures exceeding 1/2 psi (14 inch w.c.), the damage to the gas control valve/thermostat could result in a fire or explosion from leaking gas.

If the main gas line shut-off serving all gas appliances is used, also turn "OFF" the gas at each appliance. Leave all gas appliances shut "OFF" until the water heater installation is complete.

A gas line of sufficient size must be run to the water heater. Consult the current edition of the "**National Fuel Gas Code" (ANSI Z223.1/NFPA 54)** and your gas supplier concerning pipe size.

There must be:

- A readily accessible manual shut-off valve in the gas supply line serving the water heater, and
- A sediment trap ahead of gas control valve/thermostat to help prevent dirt and foreign materials from entering the gas control valve/thermostat.
- A flexible gas connector or a ground joint union between the manual gas shut-off valve and gas control valve/ thermostat to permit servicing of the unit.

Be sure to check all the gas piping for leaks before lighting the water heater. Use a soapy water solution, not a match or open flame. Repair and retest as required. When finished, rinse off soapy solution and wipe dry.

⚠ WARNING



Fire and Explosion Hazard

- Use joint compound or tape compatible with propane.
- Leak test before operating heater.
- Disconnect gas piping and shut-off valve before pressure testing system.

Use pipe joint compound or Teflon tape marked as being resistant to the action of gases.

The appliance and its gas connection must be leak tested before placing the appliance in operation.

The appliance and its individual manual gas shut-off valve should be disconnected from the gas supply piping system during any pressure testing of that system at test pressures in excess of 1/2 psi. It should be isolated from the gas supply piping system by closing its individual manual gas shut-off valve during any pressure testing of the gas supply piping system at test pressures equal to or less than 1/2 psi.

Connecting gas piping to the gas control valve/thermostat of water heater can be accomplished by either of two methods shown in Figure 13 & Figure 14.

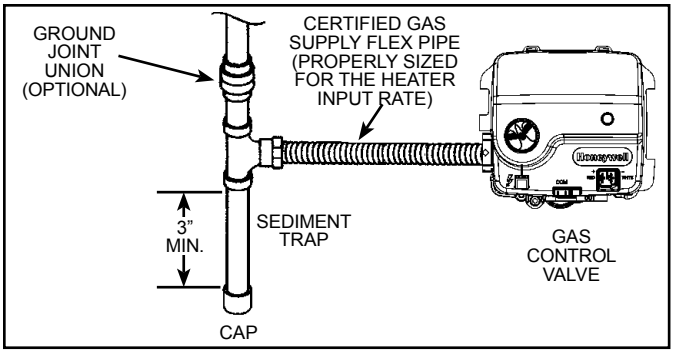

Figure 13

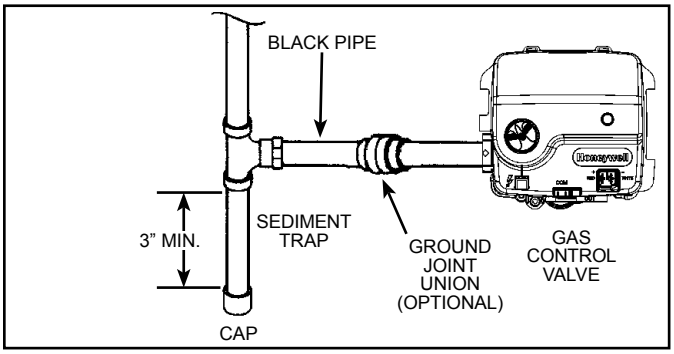

Figure 14

SEDIMENT TRAP

⚠ WARNING



Fire and Explosion Hazard

- Contaminants in gas lines can cause fire or explosion.
- Clean all gas piping before installation.
- Install sediment trap in accordance with NFPA54.

A sediment trap should be installed as close to the inlet of the water heater as practical at the time of water heater installation. The sediment trap should be either a tee fitting with a capped nipple in the bottom outlet or other device recognized as an effective sediment trap. If a tee fitting is used, it should be installed in conformance with one of the methods of installation shown in Figure 13 & Figure 14.

Contaminants in the gas lines may cause improper operation of the gas control valve/thermostat that may result in fire or explosion. Before attaching the gas line be sure that all gas pipe is clean on the inside. To trap any dirt or foreign material in the gas supply line, a sediment trap (sometimes called a dirt leg) must be incorporated in the piping. The sediment trap must be readily accessible. Install in accordance with the "Gas Piping" section. Refer to the current edition of the "**National Fuel Gas Code" (ANSI Z223.1/NFPA 54)** .

HIGH ALTITUDE INSTALLATIONS

Installations above 7,700'. require replacement of the burner orifice in accordance with the current edition of the "**National Fuel Gas Code" (ANSI Z223.1/NFPA 54)**. Failure to replace the orifice could result in improper and inefficient operation of the appliance, producing carbon monoxide gas in excess of safe limits, which could result in serious personal injury or death. Contact your gas supplier for any specific changes which may be required in your area.

⚠ WARNING

Breathing Hazard - Carbon Monoxide Gas

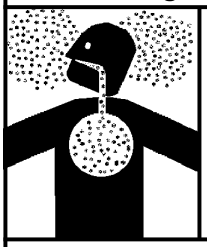

- High altitude orifice must be installed for operation above 7,700 ft.
- Contact a qualified installer or service agency.

Breathing carbon monoxide can cause brain damage or death. Always read and understand instruction manual.

VENTING

This direct vent water heater uses a sealed venting system to supply fresh combustion air to the heater and to exhaust the products of combustion (flue gases) to the outdoors. The venting is a “pipe in a pipe” system. The inner (3”) piping carries out the exhaust flue gases while the outer (6”) piping carries in fresh combustion air. The corrugated end of the vent piping connects to the top of the water heater and the opposite end connects to the vent termination hood which will be mounted on the exterior wall (see Figure 16). Figure 16 shows the hot exhaust gas exit and the location of the combustion air intake.

Figure 19 thru Figure 26 show how to assemble and connect the venting system.

Figure 28 thru Figure 30 show various installation options.

DO NOT STORE OR USE GASOLINE OR OTHER FLAMMABLE VAPORS AND LIQUIDS IN THE VICINITY OF THE VENT TERMINATION HOOD.

NEVER OPERATE THE WATER HEATER UNLESS IT IS VENTED TO THE OUTDOORS AND HAS ADEQUATE AIR SUPPLY TO AVOID RISKS OF IMPROPER OPERATION, FIRE, EXPLOSION OR ASPHYXIATION.

DO NOT OBSTRUCT THE FLOW OF COMBUSTION AND VENTILATING AIR. ADEQUATE AIR FOR COMBUSTION AND VENTILATION MUST BE PROVIDED FOR SAFE OPERATION.

⚠ WARNING

Breathing Hazard - Carbon Monoxide Gas

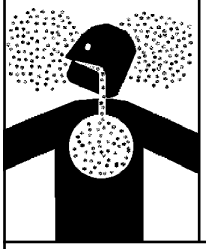

- Install vent system In accordance with codes.
- Do not operate water heater if flood damaged.
- Install water heater in accordance with the instruction manual.
- Do not operate if soot buildup is present.
- Do not obstruct water heater air intake.
- Do not place chemical vapor emitting products near water heater or vent terminal hood.
- Gas and carbon monoxide detectors are available.
- Never operate the heater unless it is vented to the outdoors and has adequate air supply to avoid risks of improper operation, fire, explosion or asphyxiation.
- Analyze the entire vent system to make sure that condensate will not become trapped in a section of vent pipe and therefore reduce the open cross sectional area of the vent.
- Chemical corrosion of flue and vent system can cause serious injury or death.

Breathing carbon monoxide can cause brain damage or death. Always read and understand instruction manual.

VENT TERMINAL CLEARANCES

The vent system must terminate so that proper clearances are maintained as cited in local codes or the current edition of the **“National Fuel Gas Code”, ANSI Z223.1/NFPA 54** as follows:

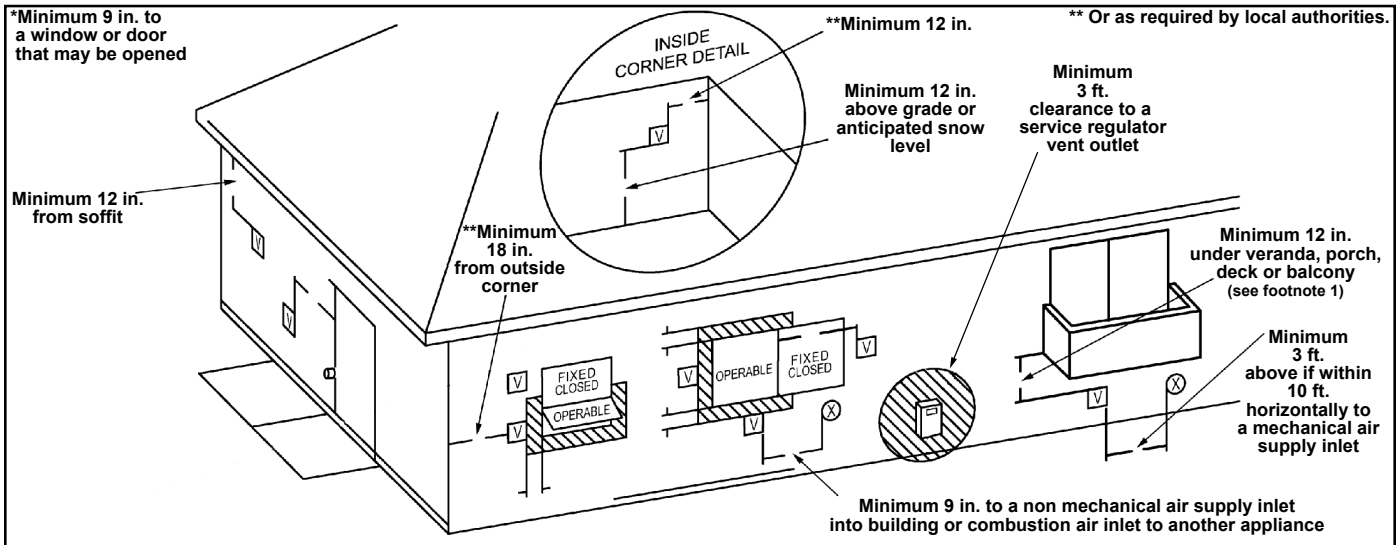

1. Permitted only if veranda, porch, deck or balcony is fully opened on a minimum of two sides beneath the floor.
2. A vent shall not terminate above a sidewalk or paved driveway that is located between two single family dwellings and serves both dwellings.

Figure 15

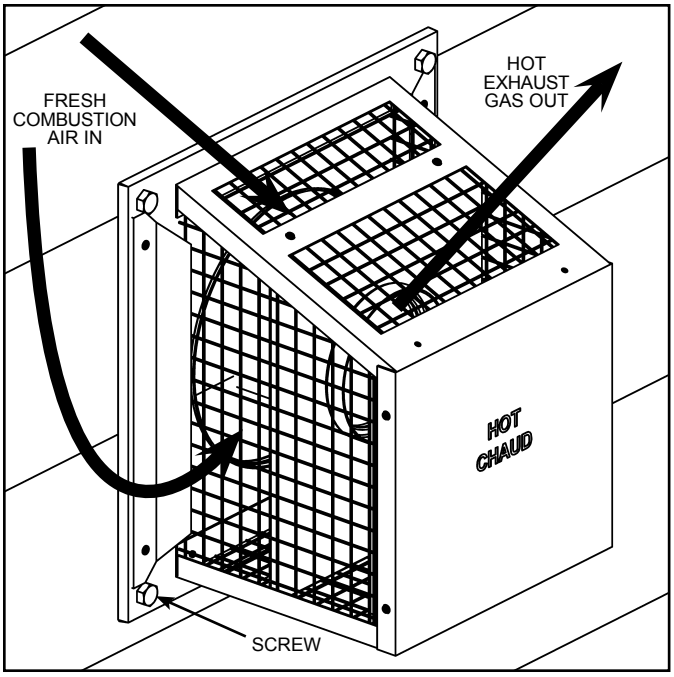

Figure 16

Be sure venting is properly connected to prevent escape of dangerous flue gases which could cause deadly asphyxiation.

DV TERMINATION SAFETY COVER

When the heater is in operation the vent termination hood will be hot (see Figure 16).

A Safety cover (see Figure 17) is available to prevent accidental contact with the vent terminal. Contact your Customer Service Department for ordering information.

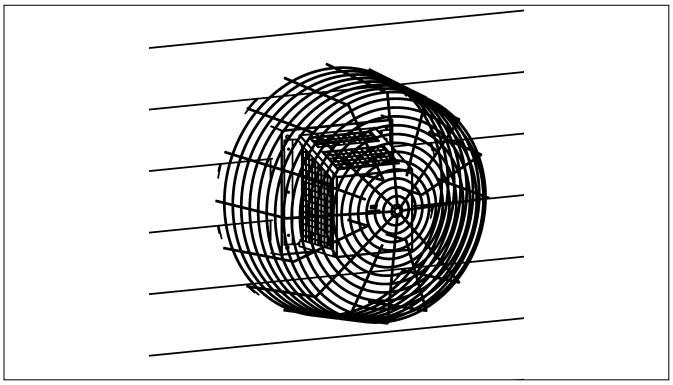

Figure 17

Alternatively, a wire mesh or louvered fencing guard can be built around the termination as shown in Figure 18.

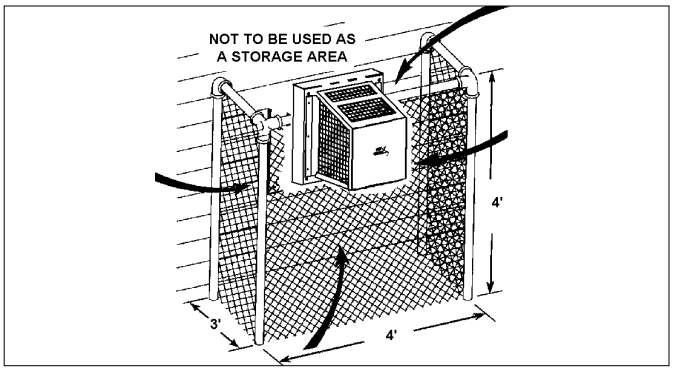

Figure 18

VENT CONNECTIONS

After the location for the vent terminal has been selected as outlined in Figure 6 & Figure 15, use the following illustrations for installation:

LOCATING CLEARANCE HOLE FOR VENT

Cut a clearance hole, approximately 7" in diameter, through the exterior wall for the vent assembly. The recommended height is 64" for 40 gal. models, 73" for 50 gal. models and 74" for 50 gal. Hi-Input models, as measured from the hole center to bottom of water heater. Where the wall is combustible and the wall thickness is over 14", 1" clearance to combustible surfaces around the vent terminal is needed. The first 14" is zero clearance (see Figure 21).

STANDARD VENT ARRANGEMENT

* If the horizontal length of the venting is **less than 30"** the restricter plate must be installed (see Figure 22, Figure 28 thru Figure 30).

- Do not use the restricter plate in an offset installation (see Figure 26).
- Do not use the restricter plate the horizontal length of the venting is **greater than 30"**.

Note: The length of "unstretched" corrugated tube could cause the length of the vent run to exceed the minimum. In this case cut off a piece of the corrugated tube to achieve the 17" minimum vent length.

VENT ASSEMBLY

The vent piping and the vent termination hood are to be connected as shown in Figure 20.

Maintain vent clearances to combustibles as shown in Figure 21.

Depending on your access to where the vent termination passes through the wall, you may wish to connect the piping and vent termination hood together first.

Inside the vent piping there are springs that hold the two corrugated pipes in position. When the pipes are stretched to the required length, the springs will remain properly spaced.

To connect the vent piping to the vent termination hood, first slide the inner (3") corrugated pipe over the inner vent termination pipe. Continue this action until the locking clip on the corrugated pipe snaps into position in the corresponding groove (see Figure 19). Secure corrugated pipe with screw (supplied) inserted through hole opposite the locking clip.

Repeat this process with the outer (6") corrugated pipe and lock it into position on the outer pipe on the vent termination (see Figure 19). Secure corrugated pipe with screw (supplied) inserted through hole opposite the locking clip.

Note: To reduce the friction between the corrugated pipe and the O-rings, it is recommended to dampen the O-rings with water.

The completed connection is shown in Figure 20.

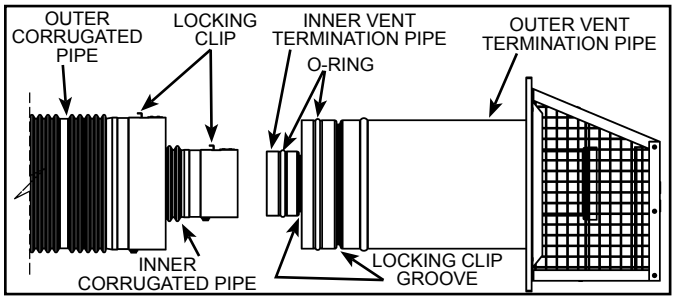

Figure 19

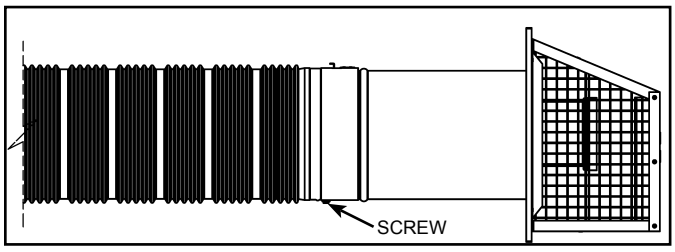

Figure 20

SECURING VENT TERMINATION ASSEMBLY TO THE EXTERIOR WALL

Some models are supplied with trim plates which may be used to cover the holes in the wall (see Figure 1 and Figure 21). Slide one trim plate (if supplied) over the outer corrugated tube, then insert the outer corrugated tube through the clearance hole from exterior wall. Secure the trim plate to the exterior wall, then secure the vent terminal to the exterior wall with 4 screw anchors (included) appropriate for the type of wall construction. Caulk the junction of the vent terminal base plate and the exterior wall with exterior type sealant (not included). Slide the trim plate (inside) over the outer corrugated tube and fasten the trim plate to the interior wall. Caulk the junction of the outer corrugated tube and the trim plate (inside) with suitable sealant. The vent termination hood attaches to the vent piping as shown in Figure 20.

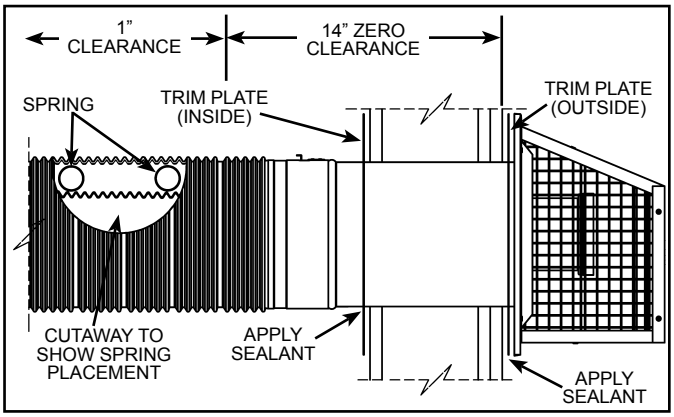

Figure 21

VENT RESTRICTER PLATE

The vent restricter plate (see Figure 22) is required for short horizontal runs on low vent installations (see Figure 29) and high vent installations (see Figure 30).

For short horizontal vent runs (see Figure 29) place the restricter plate over the flue tube reducer before connecting the inner corrugated tube to the flue tube reducer. DO NOT use the restricter plate if the horizontal run is greater than 30".

For high vertical runs use the restricter plate only when the vertical run of the venting above the heater is greater than 48" (see Figure 30).

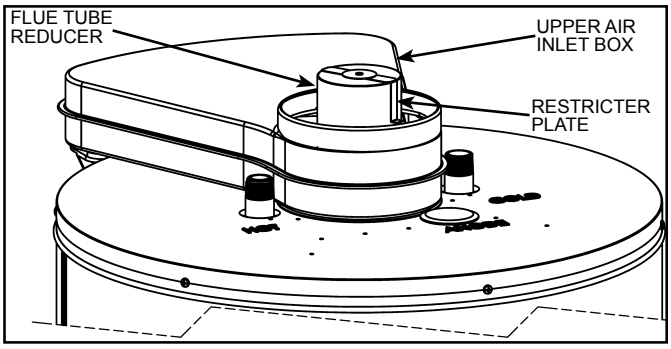

Figure 22

UNCOMPRESSING THE CORRUGATED TUBING

1. Pull the inner corrugated tube towards the water heater and leave some length over the water heater's center for bending (see Figure 23).
2. Pull the outer corrugated tube toward the water heater and leave it 2" shorter than the inner corrugated tube.
3. Make sure there are two springs evenly spaced at the bend in the tube.
4. Use metal hangers to keep venting level or with a slope upward from the heater to terminal.

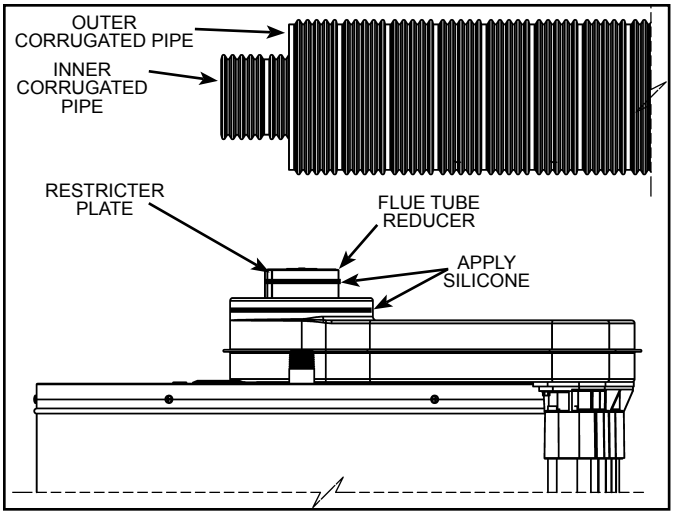

Figure 23

VENT CONNECTION TO THE WATER HEATER

Bend both the corrugated pipes toward the flue connection on the water heater. Pull and connect the inner corrugated pipe to the water heater's flue tube reducer with hi-temp red silicone (included) and gear clamp. Make sure this connection is tight and leak proof (see Figure 24).
*The sealant between the inner corrugated pipe and water heater's flue tube reducer must be hi-temp red silicone or other material suitable for 600°F continuous service.

Note: If you are using the vent restricter plate, the inner vent pipe is to go over the side legs and down the stops.

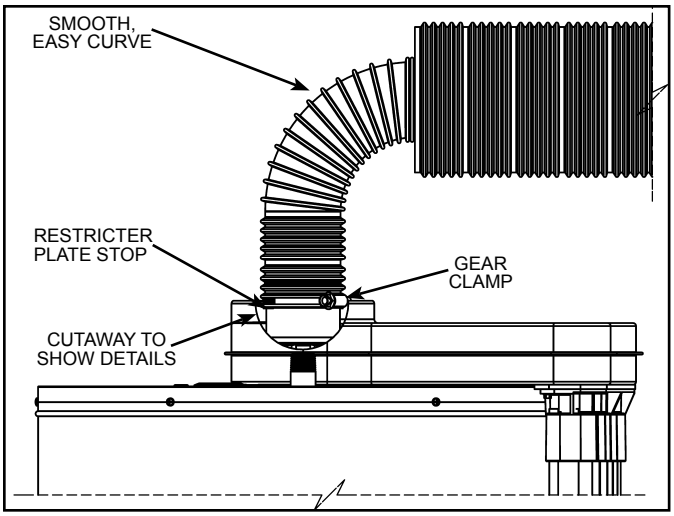

Figure 24

Apply hi-temp red silicone (included) around the collar on air manifold box. Pull the outer corrugated pipe all the way on to collar and secure with the gear clamp. Pull the free end of the corrugated pipe past the gear clamp and secure with one sheet metal screw (see Figure 25).

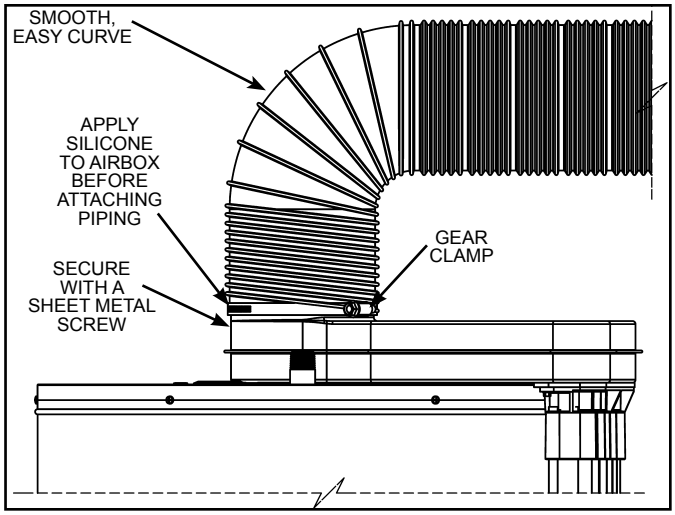

Figure 25

OFFSET VENT ARRANGEMENT

Where a straight vent arrangement is impossible, a horizontal 90° maximum bend can be made. Use the water heater casing outer diameter as a template to form the corrugated tube.

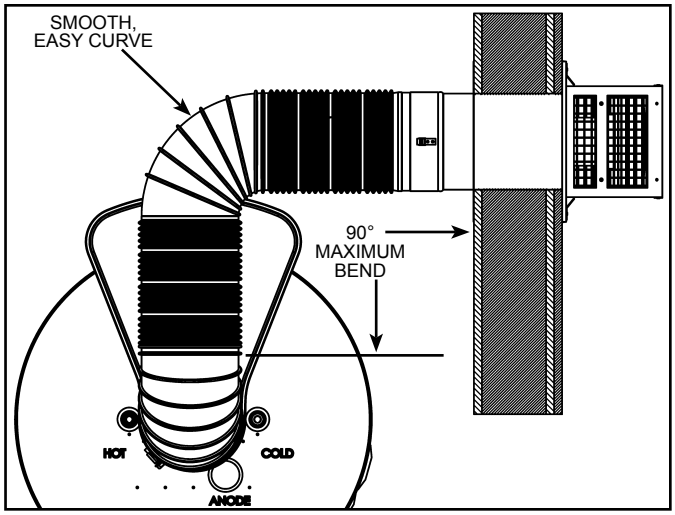

Figure 26

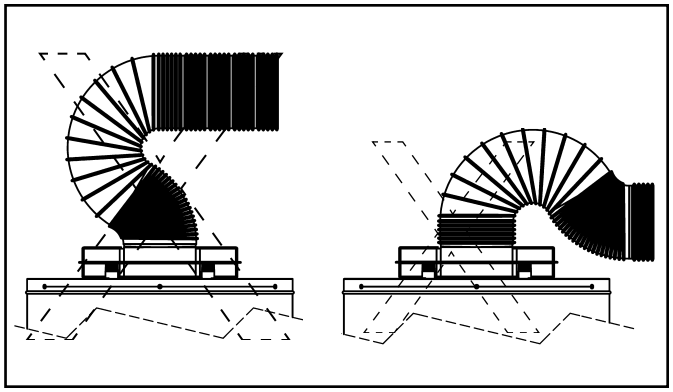

Figure 27

Note: To ensure good exhaust gas flow, bend vent piping using a smooth, easy curve as shown in Figure 24 thru Figure 26. Do not use reverse or compound curves as shown in Figure 27.

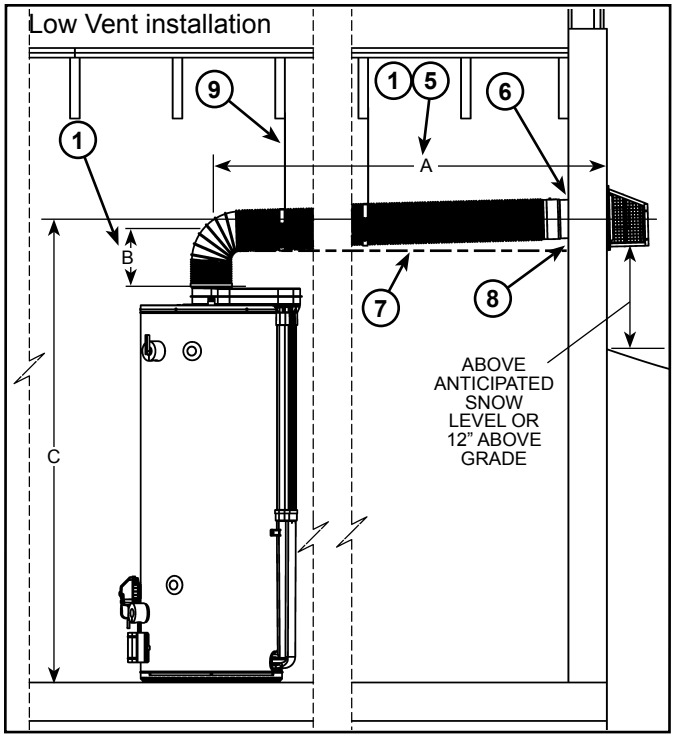

Figure 28

DIM.	4038	5040	5047
A	80" MAX.		
B	9" MIN.		
C (RECOMMENDED)	63.63"	73.00"	74.00"
C (MINIMUM)	60.75	69.50	70.50
D	14.25" MIN.		
NOTE: Dimension "C" is the height above to floor to the center of the termination hole through the exterior wall.			

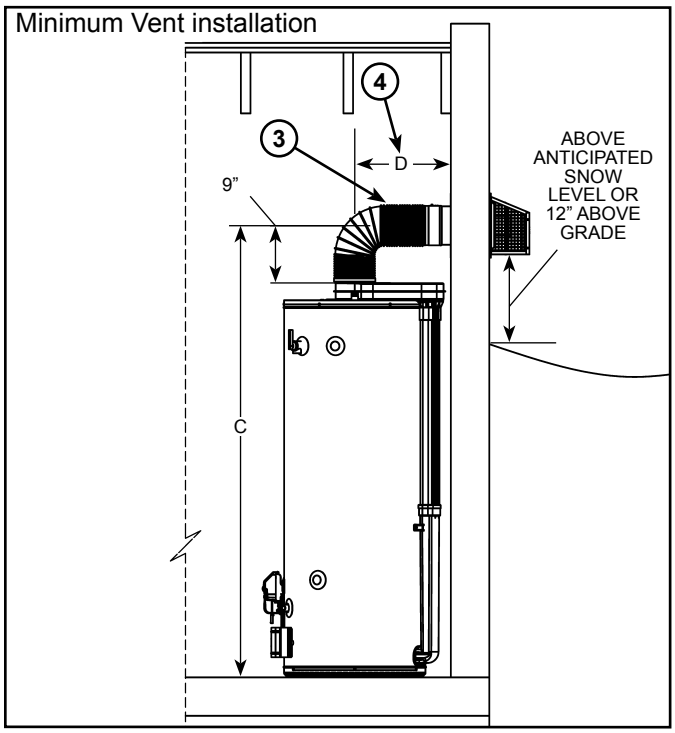

Figure 29

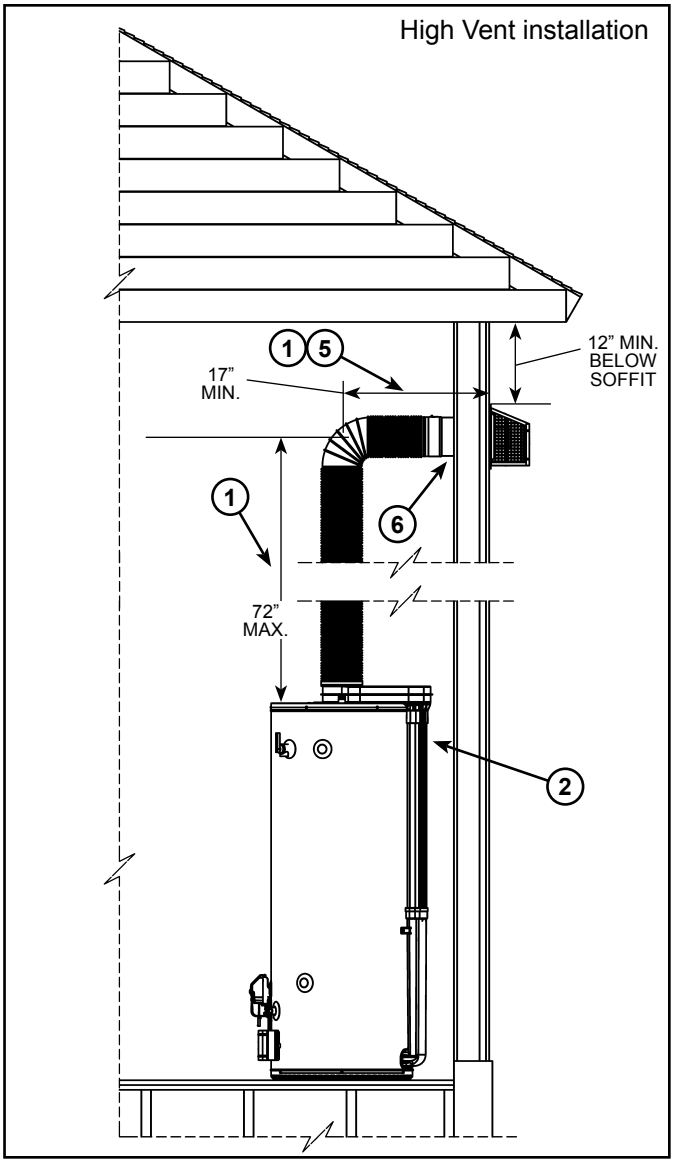

Figure 30

NOTES: (applies to Figure 28 thru Figure 30)

1. In any installation the total of dimension "A" plus dimension "B" must not exceed 89".
2. This heater can be installed with 0" clearance to a wall.
3. Minimum vent pipe clearance to combustibles is 1" (see Figure 21).
4. Minimum distance from center of heater to wall is 14.25".
5. Dimension "A" includes wall thickness.
6. Hole diameter in wall is 7".
7. **Venting must slope up away from the heater a minimum of 0.25" per foot of length to prevent condensation from collecting and to provide sufficient draft.**
8. Distance above horizontal at full extension is 2".
9. Use support stays to hold the venting to avoid sags or valleys.

INSTALLATION CHECKLIST

Note: Use and complete this checklist before lighting the heater. Correct any conditions that do not meet these instructions.

Water Heater Location

- ❑ Centrally located with the water piping system. Located as close to gas piping and vent pipe system as possible.
- ❑ Located indoors and in a vertical position. Protected from freezing temperatures.
- ❑ Proper clearances from combustible surfaces maintained and not installed directly on a carpeted floor.
- ❑ Provisions made to protect the area from water damage. Metal drain pan installed and piped to an adequate drain.
- ❑ Installation area free of corrosive elements, flammable material and flammable vapor emitting products.
- ❑ Sufficient room to service the water heater.

Gas Supply and Piping

- ❑ Gas supply is the same type as listed on the water heater data plate.
- ❑ Gas line equipped with shut-off valve, union and sediment trap.
- ❑ Adequate pipe size and of approved material.
- ❑ Approved pipe joint compound or tape used.
- ❑ Chloride-free soap and water solution or other approved means used to check all connections and fittings for possible gas leaks.

Vent Pipe System

- ❑ Evenly stretched out between water heater and vent termination hood.
- ❑ Smooth bend with adequate support to prevent sagging, 0.25” per foot.
- ❑ Inside pipe (3”) and outside pipe (6”) securely fastened to vent termination hood.
- ❑ Vent restricter plate installed on heater flue outlet as applicable.
- ❑ Inside pipe (3”) and outside pipe (6”) securely fastened to water heater with silicone and gear clamps.
- ❑ Not obstructed in any way.

Vent Termination Hood

- ❑ Securely fastened to exterior wall.
- ❑ Above anticipated snow level or 12” above grade.
- ❑ Proper clearances from windows, doors, corners, other vent openings etc.
- ❑ Area around vent termination hood clear and unobstructed.
- ❑ No flammable vapor emitting products stored nearby.
- ❑ Safety covers in place (when applicable).

Water System Piping

- ❑ Temperature-Pressure relief valve properly installed with a discharge line run to an open drain and protected from freezing.
- ❑ All piping properly installed and free of leaks.
- ❑ Heater completely filled with water.
- ❑ Closed system pressure build-up precautions installed.
- ❑ Mixing valve installed (when applicable).

After all actions on checklist are checked/ completed, read the Lighting Instructions and proceed with lighting the heater.

LIGHTING INSTRUCTIONS

FOR YOUR SAFETY READ BEFORE LIGHTING

WARNING: If you do not follow these instructions exactly, a fire or explosion may result causing property damage, personal injury or loss of life.

FLAMMABLE

BEFORE LIGHTING: ENTIRE SYSTEM MUST BE FILLED WITH WATER AND AIR PURGED FROM ALL LINES

A. This appliance has a pilot which is lit by a piezoelectric spark gas ignition system. Do not open the inner door of the appliance and try to light the pilot by hand.

B. BEFORE LIGHTING smell all around the appliance area for gas. Be sure to smell next to the floor because some gas is heavier than air and will settle on the floor.

WHAT TO DO IF YOU SMELL GAS

- Do not try to light any appliance.
- Do not touch any electric switch; do not use any phone in your building.
- Immediately call your gas supplier from a neighbor's phone. Follow the gas supplier's instructions.
- If you cannot reach your gas supplier, call the fire department.

C. Use only your hand to push in or turn the gas control knob. Never use tools. If the knob will not push in or turn by hand, don't try to repair it, call a qualified service technician. Force or attempted repair may result in a fire or explosion.

D. Do not use this appliance if any part has been under water. Immediately contact a qualified installer or service agency to replace a flooded water heater. Do not attempt to repair the unit! It must be replaced!

LIGHTING INSTRUCTIONS

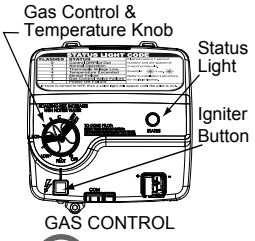

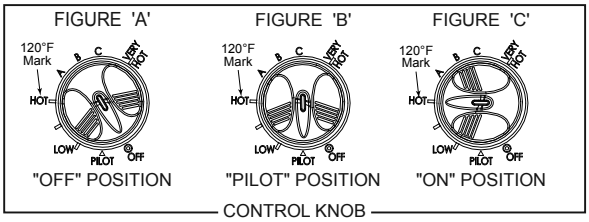

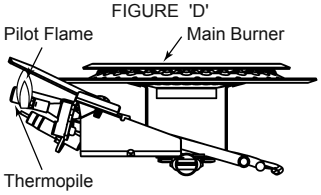

1. **STOP! It is imperative that you read all safety warnings before lighting the pilot.**
2. **Turn the gas control/temperature knob counterclockwise to the "OFF" position.**
3. **Wait ten (10) minutes to clear out any gas. If you then smell gas, STOP! Follow " B" in the safety information above on this label. If you do not smell gas, go to the next step.**
4. **Turn the gas control/temperature knob clockwise to "PILOT". See Figure 'B'.**
5. **Press the gas control/temperature knob all the way in and hold it in. The knob should travel in about 1/4 inch if it is set to "PILOT" correctly. While holding the gas control/temperature knob in, click the igniter button continuously (about once a second) for up to 90 seconds or until status light begins to blink. The pilot flame should envelop the thermopile. See Figure 'D'.**
6. **When the status light starts blinking, release the gas control/temperature knob. Set the gas control/temperature knob to the desired setting. See Figure 'C'.**
   - **If the status light does not start blinking within 90 seconds, repeat steps 2 through 5 up to THREE (3) times, waiting 10 minutes between lighting attempts.**
   - **<u>The circuitry in this advanced gas valve requires that you wait 10 minutes between lighting attempts</u>.**
   - **If the status light turns a solid color, release the gas control/temperature knob and repeat steps 2 through 5 (waiting 10 minutes before attempting to relight the pilot). If the status light does not start blinking after three lighting attempts, turn the gas control/temperature knob to the "OFF" position and call a qualified service technician or your gas supplier.**

DANGER: **Hotter water increases the risk of scald injury. Consult the instruction manual before changing the temperature setting.**

Refer to the Lighting Instructions in the Installation Manual for more detailed troubleshooting information.

TO TURN OFF GAS TO APPLIANCE

1. **Turn the gas control/temperature knob counterclockwise to the "OFF" position. The status light will stop blinking and stay on for a short time after the water heater is turned off. See Figure 'A'.**

329352-000

TEMPERATURE REGULATION

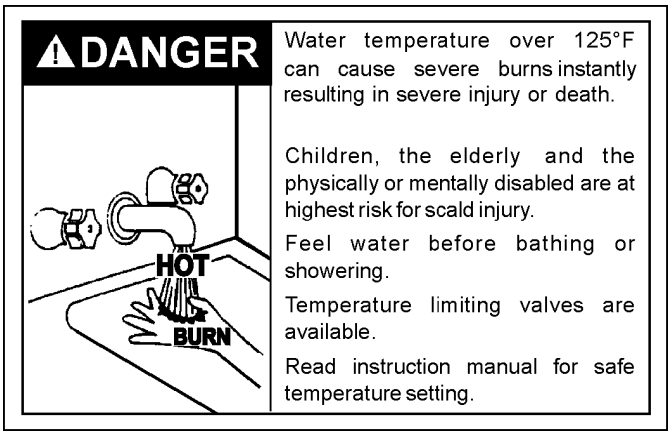

Temperature Adjustment

Valves for reducing the point-of-use temperature by mixing cold and hot water are available (see Figure 8). Also available are inexpensive devices that attach to faucets to limit hot water temperatures. Contact a licensed plumber or the local plumbing authority.

Note: During low demand periods, a lower thermostat setting will reduce energy losses and may satisfy your normal hot water needs. If hot water use is expected to be more than normal, a higher thermostat setting may be required to meet the increased demand. When leaving your home for extended periods (e.g., vacations etc.) turn the temperature dial to its lowest setting. This will maintain the water at low temperatures with minimum energy losses and prevent the tank from freezing during cold weather.

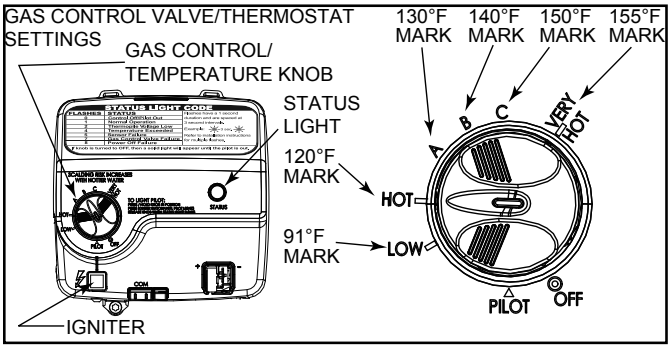

Figure 31

The thermostat is adjusted to the “OFF” position when it is shipped from the factory. Water temperature can be regulated by moving the temperature dial to the preferred setting. The preferred starting point is 120°F at the “HOT” setting. Align the knob with the desired water temperature as shown in Figure 31. There is a hot water scald potential if the thermostat is set too high.

Note: Temperatures shown on the gas control valve/ thermostat are approximates. The actual temperature of the heated water may vary.

Important: Adjusting the thermostat past the 120°F mark on the temperature dial will increase the risk of scald injury. Hot water can produce first degree burns within:

Water Temperature °F	Time for 1st Degree Burns (Less Severe Burns)	Time for Permanent Burns 2nd & 3rd Degree (Most Severe Burns)
110	(normal shower temp.)	
116	(pain threshold)	
116	35 minutes	45 minutes
122	1 minute	5 minutes
131	5 seconds	25 seconds
140	2 seconds	5 seconds
149	1 second	2 seconds
154	instantaneous	1 seconds
(U.S. Government Memorandum, C.P.S.C., Peter L. Armstrong, Sept. 15,1978)		

Table 2

Should overheating occur or the gas supply fail to shut off, turn “OFF” the manual gas shut-off valve to the appliance (see Figure 1, item 18).

OPERATING THE TEMPERATURE CONTROL SYSTEM

Water Temperature Adjustment

The water temperature setting can be adjusted from 91°F to 155°F. Turn the Gas Control Valve/Temperature Knob to the desired setting/temperature.

Note: The temperatures indicated are approximates. The actual temperature of the heated water may vary.

Operating Modes And Settings

Standard Mode - The controller adjusts the water heater to maintain the temperature set by the user.

Setting for vacation - The “LOW” position sets the controller at approximately 91°F. This setting is recommended for times when the water heater will not be in use for an extended period of time. It effectively turns the controller temperature setting down to a temperature that prevents the water in the water heater from freezing while still conserving energy.

FOR YOUR INFORMATION

EXTERNAL DAMAGE

Do not operate the water heater until it has been fully checked out by a qualified technician, if the water heater:

- Has been exposed to fire or damage.
- Displays evidence of sooting.
- Produces steam or unusually hot water.

If the water heater has been flooded it must be replaced.

START UP CONDITIONS

NEVER OPERATE THE HEATER WITHOUT FIRST BEING CERTAIN IT IS FILLED WITH WATER AND A TEMPERATURE AND PRESSURE RELIEF VALVE IS INSTALLED IN THE RELIEF VALVE OPENING OF THE HEATER. DO NOT ATTEMPT TO OPERATE HEATER WITH COLD WATER INLET VALVE CLOSED.

Condensate

Whenever the water heater is filled with cold water, some condensate will form while the burner is on. A water heater may appear to be leaking when in fact the water is condensate. This usually happens when:

a. A new water heater is filled with cold water for the first time.
b. Burning gas produces water vapor in water heaters, particularly high efficiency models where flue temperatures are lower.
c. Large amounts of hot water are used in a short time and the refill water in the tank is very cold.

Moisture from the products of combustion condense on the cooler tank surfaces and form drops of water which may fall onto the burner or other hot surfaces to produce a “sizzling” or “frying” noise.

Because of the suddenness and amount of water, condensate water may be diagnosed as a “tank leak”. After the water in the tank warms up (about 1-2 hours), the condition should disappear.

Do not assume the water heater is leaking until there has been enough time for the water in the tank to warm up.

An undersized water heater will cause more condensation. The water heater must be sized properly to meet the family’s demands for hot water including dishwashers, washing machines and shower heads.

Excessive condensate may be noticed during the winter and early spring months when incoming water temperatures are at their lowest.

Good venting is essential for a gas fired water heater to operate properly as well as to carry away products of combustion and water vapor.

Smoke/Odor

It is not uncommon to experience a small amount of smoke and odor during the initial start-up. This is due to burning off of oil from metal parts, and will disappear in a short while.

THERMAL EXPANSION

CAUTION

Improper installation and use may result in property damage.

- Avoid water heater damage.
- Install thermal expansion tank or device if necessary.
- Contact qualified installer or service agency.

Water supply systems may, because of such events as high line pressure, frequent cut-offs, the effects of water hammer among others, have installed devices such as pressure reducing valves, check valves, back flow preventers, etc. to control these types of problems. When these devices are not equipped with an internal by-pass, and no other measures are taken, the devices cause the water system to be closed. As water is heated, it expands (thermal expansion) and closed systems do not allow for the expansion of heated water.

As water is heated, it expands (thermal expansion). As the volume of water increases, there will be a corresponding increase in water pressure due to thermal expansion. Thermal expansion can cause premature tank failure (leakage). This type of failure is not covered under the limited warranty. Thermal expansion can also cause intermittent temperature-pressure relief valve operation: water discharged from the valve due to excessive pressure build up. The temperature-pressure relief valve is not intended for the constant relief of thermal expansion. This condition is not covered under the limited warranty.

A properly-sized thermal expansion tank should be installed on all closed systems to control the harmful effects of thermal expansion. Contact a plumbing service agency or your retail supplier regarding the installation of a thermal expansion tank.

STRANGE SOUNDS

Possible noises due to expansion and contraction of some metal parts during periods of heat-up and cool-down do not necessarily represent harmful or dangerous conditions.

Condensation causes sizzling and popping within the burner area during heating and cooling periods and should be considered normal. See “Condensate” in this section.

Sediment collecting over time in the bottom of the tank can result in “rumbling” or “percolating” sounds. Follow the directions given in “Draining, Refilling And Flushing”.

OPERATIONAL CONDITIONS

Smelly Water

In each water heater there is installed at least one anode rod (see Figure 1, item 22) for corrosion protection of the tank. Some models will have an additional anode which is connected to the hot water outlet nipple (see Figure 1, item 23). Certain water conditions will cause a reaction between the anode rod and the water. The most common complaint associated with the anode rod is one of a “rotten egg smell” in the hot water. The smell is a result of four factors which must all be present for the odor to develop:

1. A concentration of sulfate in the supply water.
2. Little or no dissolved oxygen in the water.
3. A sulfate reducing bacteria which has accumulated within the water heater (this harmless bacteria is nontoxic to humans).
4. An excess of active hydrogen in the tank. This is caused by the corrosion protective action of the anode.

For certain water conditions, setting the gas control valve/ thermostat at 140°F can reduce the smell generated in the water heater.

Note: Under these conditions install a mixing valve to limit the temperature of the water delivered to the system (see “Water Piping” section).

Smelly water may be eliminated or reduced in some water heater models by replacing the anode(s) with one of less active material, and then chlorinating the water heater tank and all water lines. Contact the local water heater supplier or service agency for further information concerning an Anode Replacement Kit and this chlorination treatment.

If the smelly water persists after the anode replacement and chlorination treatment, we can only suggest that chlorination or aeration of the water supply be considered to eliminate the water problem.

Do not remove the anode leaving the tank unprotected. By doing so, all warranty on the water heater tank is voided.

“Air” In Hot Water Faucets

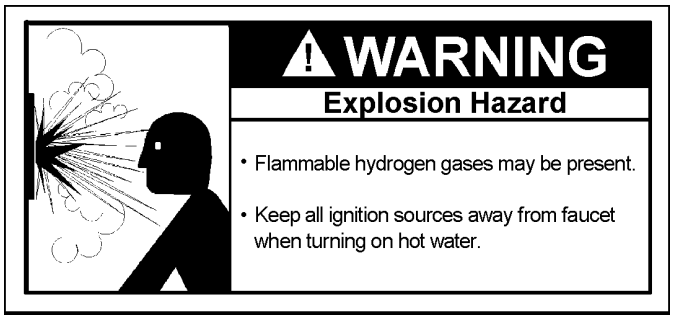

HYDROGEN GAS: Hydrogen gas can be produced in a hot water system that has not been used for a long period of time (generally two weeks or more). Hydrogen gas is extremely flammable and explosive. To prevent the possibility of injury under these conditions, we recommend the hot water faucet, located farthest away, be opened for several minutes before any electrical appliances which are connected to the hot water system are used (such as a dishwasher or washing machine). If hydrogen gas is present, there will probably be an unusual sound similar to air escaping through the pipe as the hot water faucet is opened. There must be no smoking or open flame near the faucet at the time it is open.

High Water Temperature Shut Off System

This water heater is equipped with an automatic gas shut-off system. This system works when high water temperatures are present. Turn “OFF” the entire gas supply to the water heater. The high temperature shut-off is built into the gas control valve. It is non-resettable. If the high temperature shut-off activates, the gas control valve must be replaced. Contact your gas supplier or service agency.

MAINTENANCE

FOR YOUR SAFETY AND SATISFACTORY OPERATION, IT IS RECOMMENDED THAT THIS HEATER BE CHECKED ONCE A YEAR BY A COMPETENT SERVICE PERSON.

USERS OF THIS WATER HEATER SHOULD BE AWARE THAT GAS COMPONENTS WEAR OUT OVER A PERIOD OF TIME. THE GAS CARRYING COMPONENTS OF THIS WATER HEATER SHOULD BE INSPECTED FOR PROPER OPERATION PERIODICALLY BY A QUALIFIED SERVICE TECHNICIAN.

HOUSEKEEPING

⚠ DANGER

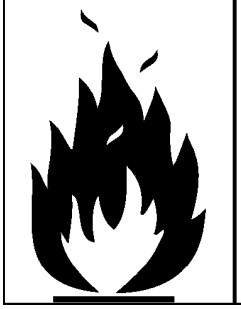

Fire and Explosion Hazard

- Do not obstruct combustion air openings at the vent termination hood.
- Do not use or store flammable vapor products such as gasoline, solvents or adhesives in the same room or area near water heater, the vent termination hood, or other appliance.
- Can cause serious injury or death.

INSTALLED IN SUITABLE AREA:
To ensure sufficient ventilation and combustion air supply, proper clearances from the water heater must be maintained. See “Locating The New Water Heater” section. Combustible materials such as clothing, cleaning materials, or flammable liquids, etc. must not be placed against or adjacent to the water heater which can cause a fire.

FLOOD DAMAGE

Flood damage to a water heater may not be readily visible or immediately detectable. However, over a period of time a flooded water heater will create dangerous conditions which can cause DEATH, SERIOUS BODILY INJURY, OR PROPERTY DAMAGE. Contact a qualified installer or service agency to replace a flooded water heater. Do not attempt to repair the unit! It must be replaced!

VENTING SYSTEM INSPECTION

At least once a year a visual inspection should be made of the venting system. You should look for:

1. Obstructions which could cause improper venting. The combustion and ventilation air flow must not be obstructed.
2. Damage or deterioration which could cause improper venting or leakage of combustion products.

Be sure the vent piping is properly connected to prevent escape of dangerous flue gasses which could cause deadly asphyxiation.
Obstructions and deteriorated vent systems may present serious health risk or asphyxiation.
Chemical vapor corrosion of the flue and vent system may occur if air for combustion contains certain chemical vapors. Spray can propellants, cleaning solvents, refrigerator and air conditioner refrigerants, swimming pool chemicals, calcium and sodium chloride, waxes, bleach and process chemicals are typical compounds which are potentially corrosive.
If after inspection of the vent system you found sooting or deterioration, something is wrong. Call the local gas utility to correct the problem and clean or replace the flue and venting before resuming operation of the water heater.

⚠ WARNING

Breathing Hazard - Carbon Monoxide Gas

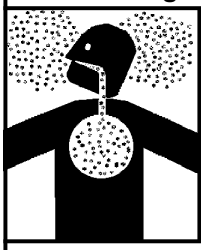

- **Flue gases may escape if vent pipe is not connected.**
- **Be alert for obstructed, sooted or deteriorated vent system to avoid serious injury or death.**
- **Do not store corrosive chemicals in vicinity of the water heater or the vent termination hood.**
- **Chemical corrosion of flue and vent system can cause serious injury or death.**

Breathing carbon monoxide can cause brain damage or death. Always read and understand instruction manual.

PILOT AND MAIN BURNER

At least once a year a visual inspection should be made of the main burner and the pilot assembly for proper flame characteristics. This can be done by removing the Outer Door and viewing the main burner operation through the Viewport on the Inner Door (see Figure 38). The main burner should provide complete combustion of gas, ignite rapidly, give reasonably quiet operation, and cause no excessive flame lifting from the burner ports. If the proper flame characteristics are not evident (see Figure 32), make sure that the flow of combustion and ventilation air is not blocked in the venting system. You should also check for sooting. Soot is not normal and will impair proper combustion.
Soot build-up indicates a problem that requires correction before further use. Turn “OFF” gas to water heater and leave off until repairs are made, because failure to correct the cause of the sooting can result in a fire causing death, serious injury, or property damage.
If proper flame characteristics are not evident, call your service agency to remove and clean the burner and correct any operational problem.

BURNER FLAMES

Inspect the burner flames through the viewport and compare them to the drawings in Figure 32. A properly operating burner should produce a soft blue flame. Blue tips with yellow inner cones are satisfactory. The tips of the flame may have a slight yellow tint. The flame should not be all yellow or have a sharp blue-orange color. Contaminated air may cause an orange colored flame. Contact a qualified service technician if the flame is not satisfactory

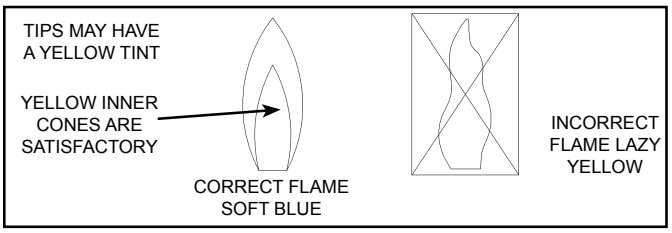

Figure 32

SERVICING THE WATER HEATER

Servicing this water heater shall be done by qualified service personnel only.

1. Before performing any maintenance, it is important to turn “OFF” the gas supply to the water heater at the manual gas shut-off valve. This valve is typically located beside the water heater. Note the position of the shut-off valve in the open/on position, then proceed to turn it “OFF” (see Figure 1).
2. With the water heater shut-off, allow sufficient time for the it to cool off before performing any service.

REMOVING AND REPLACING THE GAS CONTROL VALVE/THERMOSTAT

Removing The Gas Control Valve/Thermostat:

1. Turn the gas control/temperature knob to the “OFF” position (see Figure 31 and Figure 33).
2. Turn “OFF” the gas at the manual gas shut-off valve (see Figure 1).
3. Drain the water heater. Refer to the “Draining, Refilling And Flushing” section and follow the procedure.
4. Disconnect the igniter wire from the igniter lead wire. Use needle nose pliers to disconnect the thermopile connector. Disconnect the pilot tube (7/16” wrench) and manifold tube (3/4” wrench) at the gas control valve/thermostat (see Figure 33).

Note: Propane (LP) Gas systems use reverse (left-hand) threads on the manifold tube.

5. Refer to “Gas Piping” and disconnect the ground joint union in the gas piping (see Figure 13 & Figure 14). Disconnect the remaining pipe from the gas control valve/thermostat.
6. To remove the gas control valve/thermostat, thread a 4” section of gas pipe into the inlet and use it to turn the gas control valve/thermostat (counterclockwise). Do not use a pipe wrench or equivalent to grip body. Damage may result, causing leaks. Do not insert any sharp objects into the inlet or outlet connections. Damage to the gas control valve/thermostat may result.

Replacing The Gas Control Valve/Thermostat:

To replace the gas control valve/thermostat, reassemble in reverse order. When replacing the gas control valve/thermostat, thread a 4” section of gas pipe into the inlet and use it to turn the gas control valve/thermostat (clockwise). DO NOT OVER TIGHTEN; damage may result.

- Be sure to use approved Teflon® tape or pipe joint compound on the gas piping connections and fitting on the back of the gas control valve that screws into the tank.
- Be sure to remove the pilot ferrule nut from the new gas control valve/thermostat. Reconnect the manifold tube, pilot tube, igniter wire and the thermopile connections.
- Turn the main gas supply “ON” and check the gas supply connections for leaks. Correct any leak found.
- Light the pilot and main burner, then check the manifold tube and pilot tube connections for leaks. Use an approved noncorrosive leak detection solution. If such a solution is not available, use a mixture of hand dish washing soap and water (one part soap to 15 parts water) or childrens’ soap bubble solution. Bubbles forming indicate a leak. Correct any leak found.
- Be sure tank is completely filled with water before lighting and activating the water heater. Follow the lighting instructions on the label or see “Lighting Instructions” to restart the water heater.

If additional information is required, reference the number on the cover of this manual for service information.

TEFLON® is a registered trademark of E.I. Du Pont De Nemours and Company

REMOVING THE MANIFOLD/BURNER ASSEMBLY

1. Turn the gas control/temperature knob to the “OFF” position (see Figure 31 and Figure 33).
2. Turn “OFF” the gas at the manual gas shut-off valve (see Figure 1).

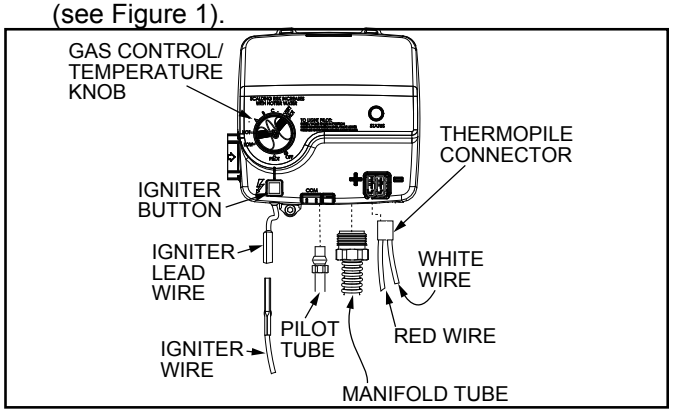

Figure 33

3. Remove the outer door.
4. Disconnect the following from the gas control valve/thermostat: pilot tube (7/16” wrench), igniter wire (from the igniter lead wire), and manifold tube (3/4” wrench) (see Figure 33).

Note: Propane (LP) Gas systems use reverse (left-hand) threads on the manifold tube.

5. Use needle nose pliers to disconnect the thermopile connector from the gas control valve/thermostat (see Figure 33).
6. Grasp the manifold tube and push down slightly to

free the manifold tube and pilot tube.

7. Remove the screws (1/4" nut driver) securing the manifold/burner assembly to the combustion chamber (Figure 34).
8. Carefully remove the manifold/burner assembly from the combustion chamber. BE SURE NOT TO DAMAGE ANY INTERNAL PARTS.

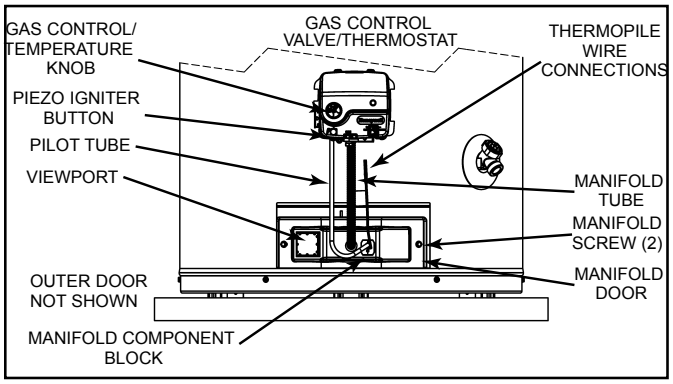

Figure 34

REMOVING THE BURNER FROM THE MANIFOLD/ BURNER ASSEMBLY

Natural Gas (Low Nox) & Propane (LP) Gas Burner

1. Take off the burner by removing the two (2) screws located underneath the burner.
2. Check the burner to see if it is dirty or clogged. The burner may be cleaned with soap and hot water (see Figure 35).

Important: DO NOT remove the orifice.

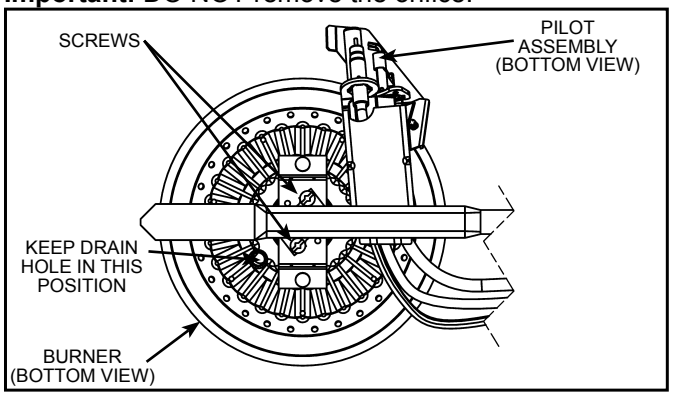

Figure 35

3. When replacing the burner, ensure the drain hole is in the position shown in Figure 35.

REPLACING THE PILOT/THERMOPILE ASSEMBLY

1. Remove the manifold door assembly as described in "Removing The Manifold/Burner Assembly" section.
2. Remove the burner to access the pilot/thermopile assembly. Remove and keep the screws securing the burner to the manifold (see Figure 35).

Important: DO NOT remove the orifice.

3. Remove the screw securing the pilot/thermopile assembly to the pilot bracket and keep for reuse later (see Figure 36 & Figure 39).
4. Lift the retainer clip straight up from the back of the manifold component block (using a flat-blade screwdriver), then remove the manifold component block from the manifold door (see Figure 36).

Important: Be careful not to bend or alter the position of the pilot tube. It will be used as a bending template for the new pilot assembly. Note the placement/order of the wires in the manifold component block.

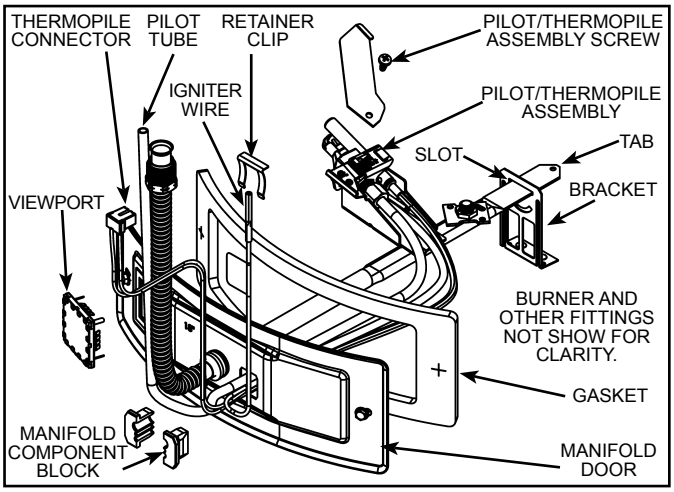

Figure 36

5. Lift the pilot/thermopile assembly (including the igniter wire) from the manifold assembly (see Figure 37).
6. Read this step carefully before proceeding. Using the old pilot/pilot tube assembly as a guide, bend the new pilot tube to match the old one. Make only the bends closest to the pilot before going to the next step.

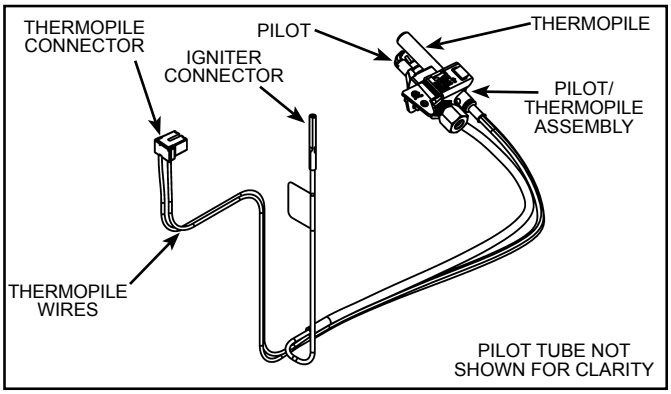

Figure 37

7. Route the new pilot tube, igniter wire and thermopile wires through the opening in the manifold door (see Figure 36).

8. Using the pilot screw removed earlier, attach the new pilot/thermopile assembly. Reattach the burner to the manifold using the screws removed earlier.
9. Reinstall the manifold component block in the manifold door. Ensure that the pilot tube and wires are positioned as shown in Figure 38.

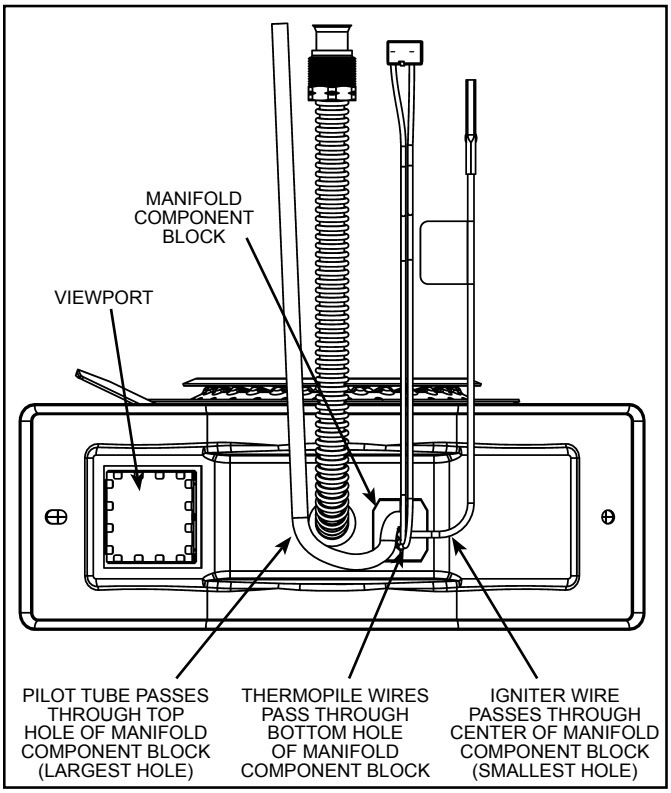

Figure 38

10. Carefully bend the new pilot tube to match the bend of the manifold tube.

Note: When bending, DO NOT crimp or crease the pilot tube.

11. Before you proceed to the next step, install the new brass ferrule nut in the gas control valve/thermostat's pilot tube opening, HAND TIGHT ONLY.
12. Install the manifold/burner assembly. Refer to the "Replacing The Manifold/Burner Assembly" section for instructions.

REPLACING THE MANIFOLD/BURNER ASSEMBLY

1. Check the door gasket for damage or imbedded debris prior to installation (see Figure 36).
2. Inspect the viewport for damage and replace as required (see Figure 36).
3. Insert the new manifold/burner assembly into the burner compartment, making sure that the tab of the manifold tube engages the slot of the bracket inside the combustion chamber (see Figure 36).
4. Inspect the door gasket and make sure there is no fiberglass insulation between the gasket and the combustion chamber (see Figure 36).
5. Tighten the two screws that secure the manifold/burner assembly to the combustion chamber. (Use a 1/4" nut driver.) There should be no space between the gasket part of the manifold door and combustion chamber.

Important: Do not operate the water heater if the door gasket does not create a seal between the manifold door and the combustion chamber.

6. Reconnect the manifold tube (3/4" wrench) and pilot tube (7/16" wrench) to the gas control valve/thermostat (see Figure 33). Do not cross-thread or apply any thread sealant to the fittings.

Important: If you were supplied with a new ferrule nut in a parts kit, follow these steps to connect the pilot tube:

1.) Install the ferrule nut into the gas valve at the pilot tube location, hand tight only.
2.) Insert the pilot tube into the ferrule nut until the tube bottoms out, then tighten the nut with a 7/16" wrench until the crimp connection seals to the pilot tube.
3.) Continue to tighten until the nut is tight in the gas valve.

Note: Propane (LP) Gas systems use reverse (left-hand) threads on the manifold tube.

7. Connect thermopile connector to the gas control valve/thermostat (see Figure 33).
8. Reconnect the igniter wire (see Figure 33).
9. Turn "ON" the gas supply to the water heater at the manual gas shut-off valve (see Figure 1).
10. Follow the lighting instructions on the label or see "Lighting Instructions" to restart the water heater. With the main burner lit, check for leaks at the manifold and pilot connections by brushing on an approved noncorrosive leak detection solution. If such a solution is not available, use a mixture of hand dish washing soap and water (one part soap to 15 parts water) or childrens' soap bubble solution. Bubbles forming indicate a leak. Correct any leak found.
11. Verify proper operation, then replace the outer door.

⚠WARNING



Explosion Hazard

Tighten both manifold door screws securely.

Remove any fiberglass between gasket and combustion chamber.

Replace viewport if glass is missing or damaged.

Replace manifold component block if missing or removed.

Replace door gasket if damaged.

Failure to do so can result in death, explosion, or fire.

PIEZOELECTRIC IGNITER SYSTEM

The piezoelectric igniter system consists of the igniter button, electrode, and wire. The pilot is ignited by an electric spark generated when the igniter button is pressed (see Figure 39).

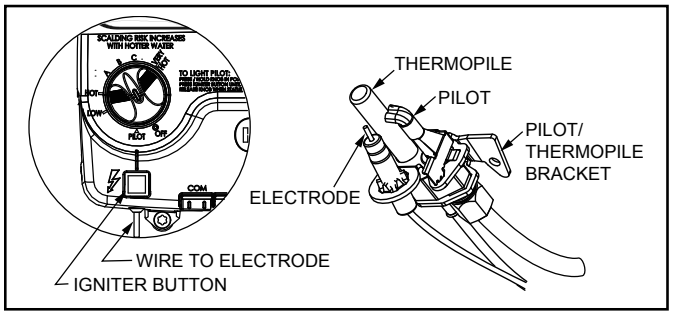

Figure 39

TESTING THE IGNITER SYSTEM

Turn “OFF” the gas to the water heater at the manual gas shut-off valve. Watch the electrode tip while activating the igniter. A visible spark should jump from the electrode. To avoid shock, do not touch the burner or any metal part on the pilot or pilot assembly. If no spark is visible, check the wire connections and make sure the electrode is not broken. Replace the igniter if defective. Dirt and rust on the pilot or electrode tip can prevent the igniter spark. Wipe clean with a damp cloth and dry completely. Rust can be removed from the electrode tip and metal surfaces by lightly sanding with an emery cloth or fine grit sandpaper.

TEMPERATURE-PRESSURE RELIEF VALVE TEST

It is recommended that the temperature-pressure relief valve be checked to ensure it is in operating condition at least once a year.

When checking the temperature-pressure relief valve operation, make sure that (1) no one is in front of or around the outlet of the T&P valve discharge line, and (2) that water discharge will not cause any property damage, as water may be extremely hot. Use care when operating valve as the valve may be hot.
To check the relief valve, lift lever at the end of valve several times (see Figure 40). The valve should seat properly and operate freely.

If after manually operating the valve, it fails to completely reset and continues to release water, immediately close the cold water inlet to the water heater and drain the water heater, see “Draining, Refilling And Flushing” section. Replace the T&P valve with a properly rated/ sized new one, see “Temperature-Pressure Relief Valve” for instructions on replacement.

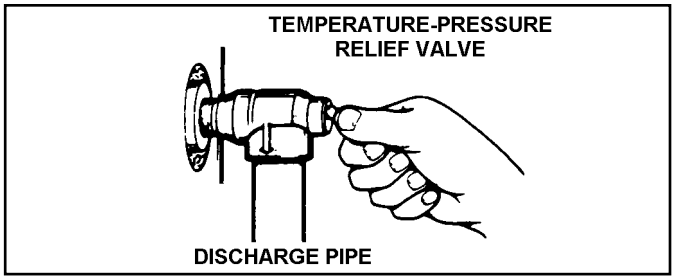

Figure 40

If the Temperature-Pressure Relief Valve on the water heater weeps or discharges periodically, it may be due to thermal expansion.
Note: Excessive water pressure is the most common cause of temperature-pressure relief valve leakage. Excessive water system pressure is most often caused by “thermal expansion” in a “closed system.” See “Closed Water Systems” and “Thermal Expansion” sections of this manual. The T&P valve is not intended for the constant relief of thermal expansion.

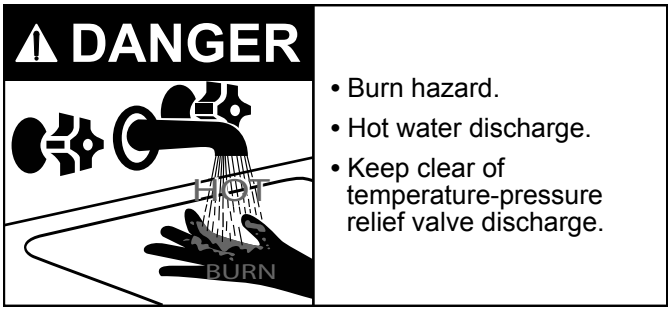

DRAINING, REFILLING AND FLUSHING

Periodic draining and cleaning of sediment from the tank maybe necessary. It is recommended that the tank be drained and flushed every 6 months to remove sediment which may build up during operation. The water heater should be drained if being shut down during freezing temperatures or for an extended period of time. See “Typical Installation” section (Figure 1) in this manual for location of the water heater components described below.

To Drain The Water Heater Storage Tank

1. Turn the gas control/temperature knob to the “OFF” position (see Figure 31 and Figure 33).
2. Turn “OFF” the gas supply at the manual gas shut-off valve.
3. Close the cold water inlet valve to the water heater.
4. Open a nearby hot water faucet and leave open to allow for draining.
5. Connect a hose to the drain valve and terminate to an adequate drain.

Note: If the water heater is going to be shut down and drained for an extended period, the drain valve should be left open with hose connected allowing water to terminate to an adequate drain.

6. Open the water heater drain valve.
7. Close the water heater drain valve when all water in the storage tank has drained.

To Refill The Water Heater Storage Tank

1. Close the water heater drain valve.
2. Remove the drain hose.
3. Open a nearby hot water faucet and leave open to allow air to escape.
4. Open the cold water inlet valve to the water heater.
5. To purge the lines of any excess air, keep the hot water faucet open for 3 minutes after a constant flow of water is obtained.
6. Turn “ON” the gas supply at the manual gas shut-off valve.
7. Follow the lighting instructions on the label or see “Lighting Instructions” to restart the water heater.

To Flush The Water Heater Storage Tank

1. Turn “OFF” the gas at the manual gas shut-off valve (see Figure 1).
2. Ensure the cold water inlet valve is open.
3. Connect a hose to the drain valve and terminate it to an adequate drain.
4. Ensure the drain hose is secured before and during the entire flushing procedure. Flushing is performed with system water pressure applied to the water heater.
5. Open the water heater drain valve to flush the storage tank. Caution: Water will be hot.
6. Flush the water heater storage tank to remove sediment and allow the water to flow until it runs clean.
7. Close the water heater drain valve when flushing is completed.
8. Remove the drain hose.
9. Ensure the heater is full of water.
10. Turn “ON” the gas supply at the manual gas shut-off valve.
11. Follow the lighting instructions on the label or see “Lighting Instructions” to restart the water heater.
12. Allow the water heater to complete several heating cycles to ensure it is operating properly.

Caution: Do not turn on the gas to the water heater unless the tank is full. Open a hot water faucet and allow the water to run until the air is purged and the water flows uninterrupted from the faucet.

Important: When operating a cold tank, condensation can occur and drip on the burner. This should not be confused with a tank leak.

DRAIN VALVE WASHER REPLACEMENT

1. Turn “OFF” the gas at the manual gas shut-off valve (see Figure 1).
2. Follow “Draining” instructions in the “Draining, Refilling And Flushing” section.
3. Turning counterclockwise (↶), remove the hex cap below the screw handle.
4. Remove the washer and put the new one in place.
5. Screw the handle and cap assembly back into the drain valve and retighten using a wrench. DO NOT OVER TIGHTEN.
6. Follow “Refilling” instructions in the “Draining, Refilling And Flushing” section.
7. Check for leaks. Repair as needed.
8. Follow the lighting instructions on the label or see “Lighting Instructions” to restart the water heater.

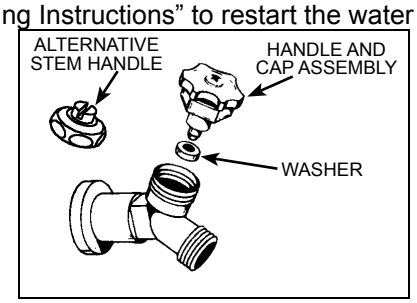

Figure 41

ANODE ROD MAINTENANCE

CAUTION

Property Damage Hazard

- Avoid water heater damage.
- Inspection and replacement of anode rod required.

Each water heater contains at least one anode rod, which will slowly deplete (due to electrolysis) prolonging the life of the water heater by protecting the glass-lined tank from corrosion. Adverse water quality, hotter water temperatures, high hot water usage, hydronic heating devices, and water softening methods can increase the rate of anode rod depletion. Once the anode rod is depleted, the tank will start to corrode, eventually developing a leak.

Certain water conditions will cause a reaction between the anode rod and the water. The most common complaint associated with the anode rod is a “rotten egg smell” produced from the presence of hydrogen sulfide gas dissolved in the water. See “Operational Conditions”.

Important: Do not remove this rod permanently as it will void any warranties. A special anode rod may be available if water odor or discoloration occurs.

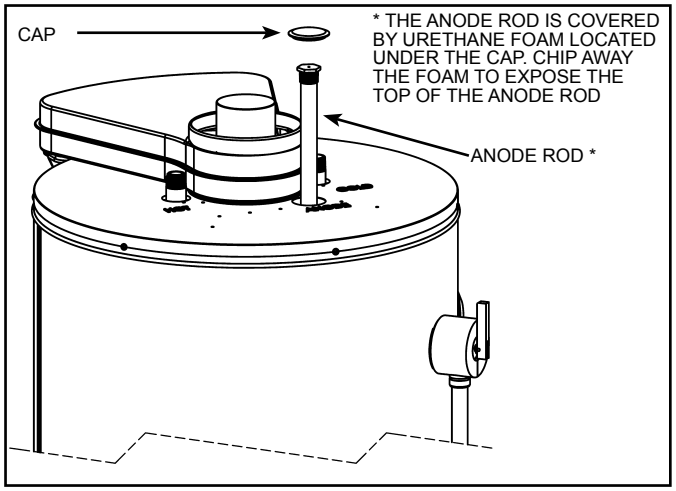

Figure 42

Note: This rod may reduce but not eliminate water odor problems. The water supply system may require special filtration equipment from a water conditioning company to successfully eliminate all water odor problems.

Artificially softened water is exceedingly corrosive because the process substitutes sodium ions for magnesium and calcium ions. The use of a water softener may decrease the life of the water heater tank. The anode rod (see Figure 42) should be inspected after a maximum of three years and annually thereafter until the condition of the anode rod dictates its replacement (see Figure 43).

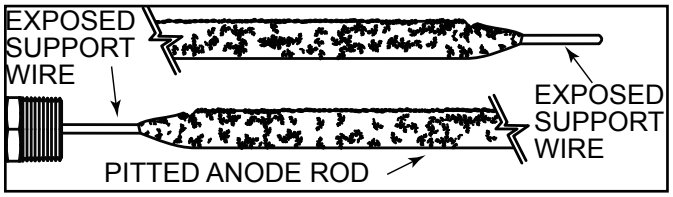

Figure 43

Note: Artificially softened water requires the anode rod to be inspected annually. The following are typical (but not all) signs of a depleted anode rod:

- The majority of the rods diameter is less than 3/8".
- Significant sections of the support wire (approx. 1/3 or more of the anode rod's length) are visible.

If the anode rod show signs of either or both it should be replaced.

Note: Whether re-installing or replacing the anode rod, check for any leaks and immediately correct if found.

To Remove The Anode Rod:

1. Turn the gas control/temperature knob to the "OFF" position (see Figure 31 and Figure 33).
2. Turn "OFF" the gas at the manual gas shut-off valve (see Figure 1).
3. Shut off the incoming water supply to the water heater and open a nearby hot water faucet to depressurize the water tank.
4. Connect a hose to the drain valve and terminate it to adequate drain or to the exterior of the building. Open the drain valve and drain approximately 5 gallons of water from tank. (Refer to "Draining, Refilling And Flushing" for proper procedures). Close drain valve and remove hose.
5. Remove and retain the anode cap on top of the heater and remove and retain just enough insulation so you can access to the anode head (see Figure 42). Keep in a safe place for reinstallation later.
6. Remove the anode rod by using a ratchet and a 1-1/16" socket turning counter-clockwise (see Figure 42).

To Install The Anode Rod:

1. Use Teflon® tape or an approved pipe sealant on threads of the new anode rod.
2. Place the anode rod in the spud (top of the tank) (see Figure 42) and turn clockwise until the threads are hand tight. Using a ratchet and 1-1/16" socket tighten down water tight.
3. Open a nearby hot water faucet to purge air from the water line. Fill water heater tank completely. (Refer to "Draining, Refilling And Flushing" for proper procedures).

Note: To assure the water heater tank is full, keep the hot water faucet open for 3 minutes after a constant flow of water is obtained.

4. After turning closing the hot water faucet, check for water leaks around anode rod and immediately correct any if found.
5. Reinstall the insulation and anode cap which were removed in step 5 of removal process.
6. Turn "ON" the manual gas shut-off valve (see Figure 1).
7. Turn the gas control/temperature knob to the "ON" position (see Figure 31 and Figure 33).
8. Follow the lighting instructions on the label or see "Lighting Instructions" to restart the water heater.

LEAKAGE CHECKPOINTS

SERVICE

If a condition persists or you are uncertain about the operation of the water heater contact a service agency.

Use this guide to check a “Leaking” water heater (see Figure 44). Many suspected “Leakers” are not leaking tanks. Often the source of the water can be found and corrected.

If you are not thoroughly familiar with gas codes, your water heater, and safety practices, contact your gas supplier or qualified installer to check the water heater.

Read this manual first. Then before checking the water heater make sure the gas supply has been turned “OFF”, and never turn the gas “ON” before the tank is completely full of water.

Never use this water heater unless it is completely filled with water. To prevent damage to the tank, the tank must be filled with water. Water must flow from the hot water faucet before turning “ON” gas to the water heater.

D. Water at the vent assembly is water vapor which has condensed out of the combustion products. This is caused by a problem in the vent. Contact the gas utility.
E. *Condensation may be seen on pipes in humid weather or pipe connections may be leaking.
F. *The anode rod fitting may be leaking (anode is located under the plastic plug and insulation).
G. Small amounts of water from temperature-pressure relief valve may be due to thermal expansion or high water pressure in your area.
H. *The temperature-pressure relief valve may be leaking at the tank fitting.
I. Water from a drain valve may be due to the valve being slightly opened.
J. *The drain valve may be leaking at the tank fitting.
K. Combustion products contain water vapor which can condense on the cooler surfaces of the tank. Droplets form and drip onto the burner or run on the floor. This is common at the time of start-up after installation and when incoming water is cold.
L. Water in the water heater bottom or on the floor may be from condensation, loose connections, or the relief valve. DO NOT replace the water heater until a full inspection of all possible water sources is made and necessary corrective steps taken.
M. The combo heating system connections may be leaking.

Leakage from other appliances, water lines, or ground seepage should also be checked.

- *To check where threaded portion enters tank, insert cotton swab between jacket opening and fitting. If cotton is wet, follow the draining instructions in this manual, and then remove fitting. Put pipe dope or Teflon® tape on the threads and replace. To refill the water heater follow the instructions in “Draining, Refilling And Flushing”.

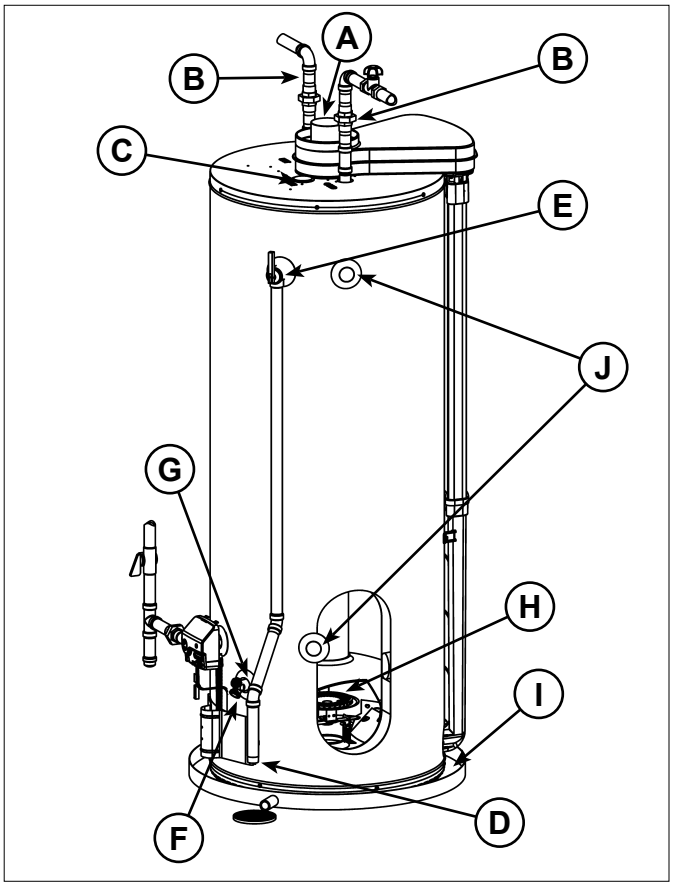

Figure 44

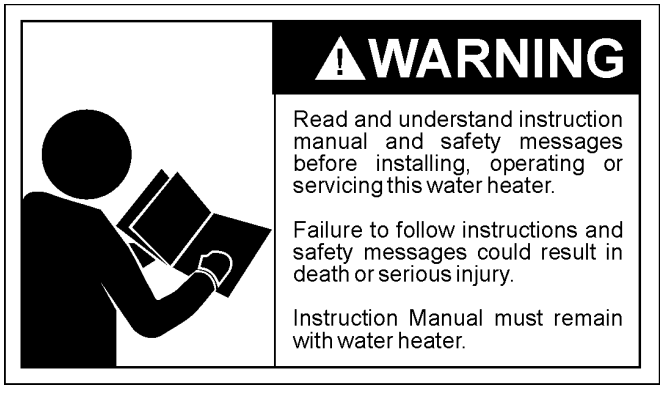

REFERENCE PARTS LISTING

Replacement parts may be ordered through your plumber or the local distributor. When ordering replacement parts, always have the following information ready:

1. Model, Serial and Product number
2. Type of gas
3. Item number
4. Parts description

1 Vent Termination Hood
2 Wall Plate
3 ***Vent Pipe
4 Cold Water Inlet Nipple/Diptube
6 T&P Valve
7 Gas Control Valve/Thermostat (Honeywell)
9 *Discharge Pipe
10 Drain Valve
11 Outer Gas Door
12 Manifold Door Assembly (behind outer door) (see Figure 3 & Figure 4) (see also **Figure 47 & Figure 48**)
13 *Floor Drain
14 *Metal Drain Pan
15 Flexible Manifold Tube (see Figure 3 & Figure 4) (see also **Figure 47 & Figure 48**)
22 Anode (under cap)
23 Hot Water Outlet Nipple (or Optional Nipple/Anode)
26 Air Inlet Snorkel
27 Air Tower
28 ***Airbox
29 *Thermal Expansion Tank (required for all closed systems)
30 Sheet Metal Burner (see Figure 3 & Figure 4) (see see also **Figure 47 & Figure 48**)
31 Gas Orifice (see Figure 3 & Figure 4) (see also **Figure 47 & Figure 48**)
32 Gas Manifold (see Figure 3 & Figure 4) (see also **Figure 47 & Figure 48**)
33 Manifold Door Gasket (see Figure 3 & Figure 4) (see also **Figure 47 & Figure 48**)
34 Manifold Door (see Figure 3 & Figure 4) (see also **Figure 47 & Figure 48**)
35 Two Piece Grommet With Clip (see Figure 3 & Figure 4) (see also **Figure 47 & Figure 48**)
36 Viewport (see Figure 3 & Figure 4) (see also **Figure 47 & Figure 48**)
37 Flexible Manifold Tube (see Figure 3 & Figure 4) (see also **Figure 47 & Figure 48**)
38 Pilot (see Figure 3 & Figure 4) (see also **Figure 47 & Figure 48**)
39 Thermopile (see Figure 3 & Figure 4) (see also **Figure 47 & Figure 48**)
40 Pilot Shield (see Figure 3 & Figure 4) (see also **Figure 47 & Figure 48**)

* Items not supplied with the water heater.

*** During operation the vent pipe and airbox can get hot.

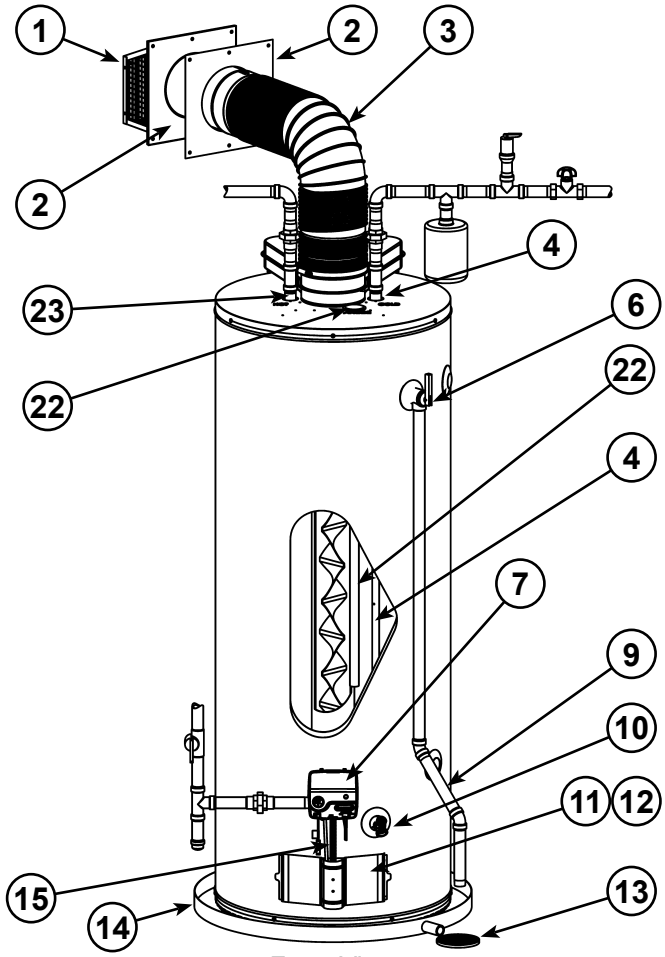

Front View
Figure 45

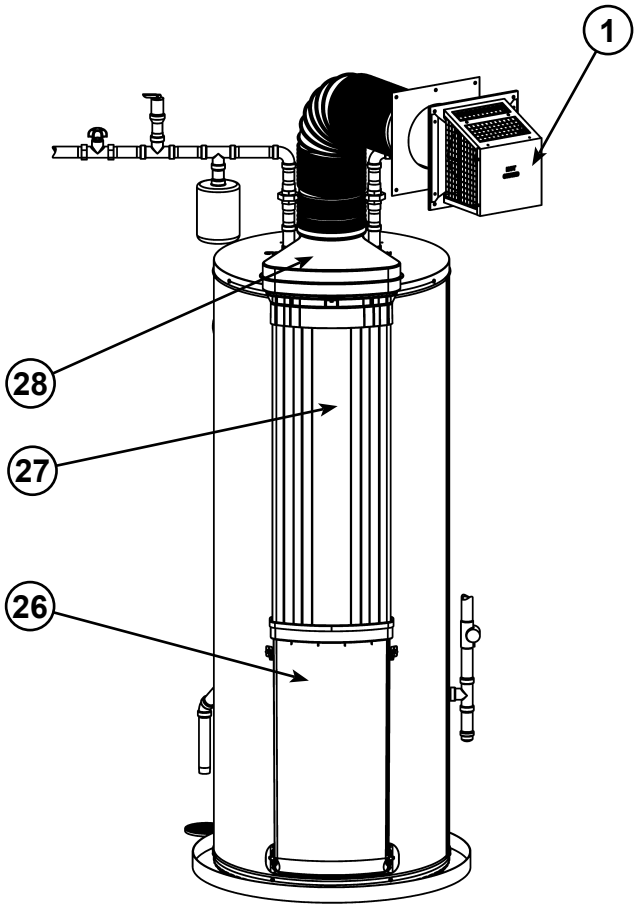

Rear View
Figure 46

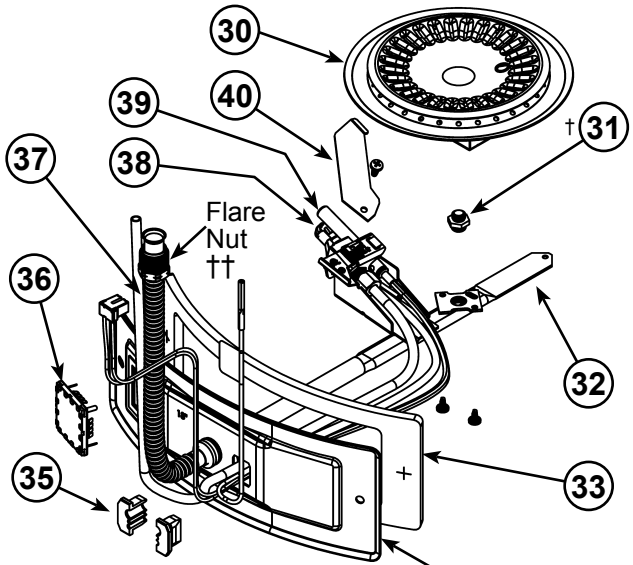

Natural gas and Propane (LP) main burner with igniter assembly for 38k to 42k Btu/hr models

Figure 47

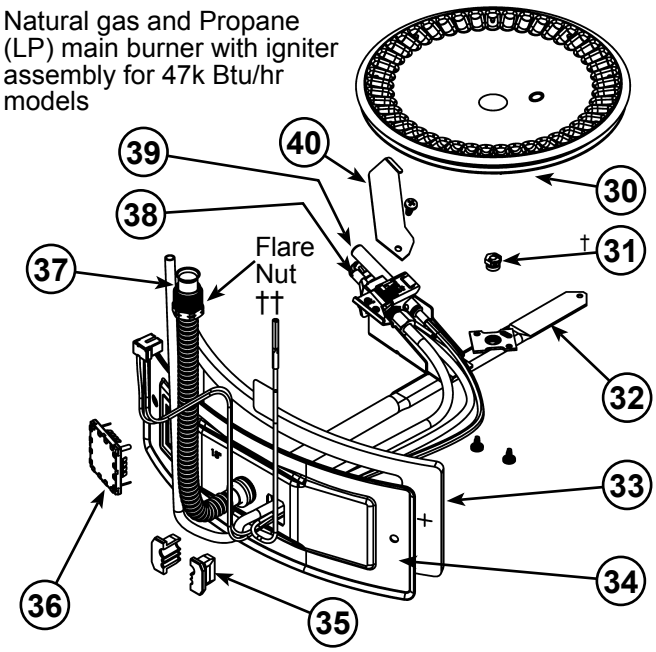

Figure 48

Notes:

† The orifice on Natural gas models has Right-hand thread, the orifice on Propane (LP) models has Left-hand thread.

†† For Natural gas models the Flare Nut has Right-hand thread. For Propane (LP) models the Flare Nut has Left-hand thread.

TROUBLESHOOTING GUIDELINES

PROBLEM	POSSIBLE CAUSE(S)	CORRECTION
BURNER WILL NOT IGNITE	1. Pilot not lit 2. Thermostat set too low 3. No gas 4. Dirt in the gas lines 5. Pilot line clogged 6. Main burner line clogged 7. Defective thermopile 8. Defective gas control/thermostat	1. Light pilot 2. Turn temp. dial to desired temperature 3. Check with gas utility company 4. Notify utility-install trap in gas line 5. Clean, locate source and correct 6. Clean, locate source and correct 7. Replace thermopile 8. Replace gas control/thermostat
SMELLY WATER	1. Sulfur in the water	1. Replace the anode with a special anode 2. Raising the water heater temperature setting to 140°F may help to eliminate the odor (will require the use of a mixing valve)
BURNER FLAME YELLOW-LAZY	1. Low gas pressure 2. Flue clogged 3. Main burner line clogged 4. Obstruction in main burner orifice 5. Insufficient combustion air	1. Check with gas utility company 2. Clean, locate source and correct 3. Clean, locate source and correct 4. Clean or replace orifice 5. Check that the vent termination hood and venting pipe is not blocked
PILOT WILL NOT LIGHT OR REMAIN LIT	1. Air in gas line 2. No gas 3. Dirt in gas lines 4. Pilot line or orifice clogged 5. Defective thermopile 6. Insufficient combustion air 7. Gas control/thermostat ECO switch open 8. Defective igniter or electrode 9. Low gas pressure 10. Incorrect gas	1. Bleed the air from the gas line 2. Check with gas utility company 3. Notify utility-install sediment trap (dirt leg) in gas line 4. Clean, locate source and correct 5. Replace thermopile 6. Check that the vent termination hood and venting pipe is not blocked 7. Replace gas control/thermostat 8. Replace igniter or pilot assembly 9. Check with gas utility company 10. Check rating plate for correct gas type. Check with gas utility company
HIGH OPERATION COSTS	1. Thermostat set too high 2. Sediment or lime in tank 3. Water heater too small for job 4. Wrong piping connections 5. Leaking faucets 6. Gas leaks 7. Wasted hot water 8. Long runs of exposed piping 9. Hot water piping in exposed wall	1. Set temperature dial to lower setting 2. Drain/Flush-Provide water treatment if needed 3. Install adequate size heater 4. Correct piping-dip tube must be in cold inlet 5. Repair faucets 6. Check with utility-repair at once 7. Advise customer 8. Insulate piping 9. Insulate piping
PILOT FLAME TOO SMALL	1. Pilot line or orifice clogged 2. Low gas pressure 3. Defective pilot 4. Incorrect gas	1. Clean, locate source and correct 2. Check with gas utility company 3. Replace pilot 4. Check rating plate for correct gas type. Check with gas utility company

PROBLEM	POSSIBLE CAUSE(S)	CORRECTION
INSUFFICIENT HOT WATER	1. Thermostat set too low 2. Sediment or lime in tank 3. Water heater too small 4. Wrong piping connections 5. Leaking faucets 6. Wasted hot water 7. Long runs of exposed piping 8. Hot water piping in outside wall 9. Low gas pressure 10. Leaks or cracks in dip tube 11. Incorrect plumbing/plumbing crossover	1. Turn temperature dial to desired setting 2. Drain/flush-provide water treatment if needed 3. Install adequate size heater 4. Correct piping-dip tube must be in cold inlet 5. Repair faucets 6. Advise customer 7. Insulate piping 8. Insulate piping 9. Check with gas utility company 10. Check dip tube. Replace if faulty 11. Correct cold water crossover
SLOW HOT WATER RECOVERY	1. Insufficient combustion air 2. Venting/flue clogged 3. Low gas pressure 4. Improper calibration 5. Gas control/thermostat set too low 6. Water heater too small 7. Wrong piping connections 8. Wasted hot water 9. Sediment or lime in tank	1. Check vent termination hood and venting, flueway, flue baffle and burner 2. Clean flue, locate source and correct 3. Check with gas utility company 4. Replace gas control/thermostat 5. Turn temperature dial to desired setting 6. Install adequate size heater 7. Correct piping-dip tube must be in cold inlet 8. Advise customer 9. Drain/flush - provide water treatment if needed
DRIP FROM RELIEF VALVE	1. Excessive water pressure 2. Heater stacking 3. Closed water system/thermal expansion	1. Use a pressure reducing valve and relief valve 2. Lower the thermostat setting 3. See “Closed System/Thermal Expansion”
THERMOSTAT FAILS TO SHUT OFF	1. Defective gas control/thermostat 2. Improper calibration	1. Replace gas control/thermostat 2. Replace gas control/thermostat
COMBUSTION ODORS	1. Insufficient ventilation air 2. Flue clogged or vent system blocked 3. Heater installed in a confined area	1. Provide ventilation to the water heater. Check flueway, flue baffle, burner 2. Clean, locate source and correct 3. Provide fresh air ventilation
SMOKING AND CARBON FORMATION (SOOTING)	1. Insufficient combustion air 2. Low gas pressure 3. Venting/flue clogged 4. Defective gas control/thermostat 5. Burner flame yellow-lazy	1. Check vent termination hood and venting, flueway, flue baffle and burner 2. Check with gas utility company 3. Clean, locate source and correct 4. Replace gas control/thermostat 5. See “Burner Flame Yellow-Lazy”
CONDENSATION	1. Temperature setting too low 2. Water heater too small	1. Increase the temperature setting 2. Install adequate size heater
BURNER FLAME FLOATS AND LIFTS OFF PORTS	1. Orifice too large 2. High gas pressure 3. Flue clogged	1. Replace with correct orifice 2. Check with gas utility company 3. Clean flue and burner-locate source and correct
BURNER FLAME TOO HIGH	1. Orifice too large 2. High gas pressure	1. Replace with correct orifice 2. Check with gas utility company
FLAME BURNS AT ORIFICE	1. Defective gas control/thermostat 2. Low gas pressure 3. Orifice not properly installed	1. Replace gas control/thermostat 2. Check with gas utility company 3. Reinstall the orifice

STATUS LIGHT AND DIAGNOSTIC CODE TROUBLESHOOTING CHART

LED STATUS	PROBLEM	CORRECTIVE ACTION
0 FLASHES (LED NOT LIT)	Pilot light is not lit or thermopile has not yet reached normal operating temperature.	Turn Gas Control Valve/Thermostat knob to “OFF”. Wait 10 minutes, then attempt to relight Pilot by following the lighting instructions on the water heater’s label. Until the thermopile reaches its normal operating temperature, the Status Light will not blink, even if the Pilot is lit. It may take up to 90 seconds of continuous Pilot operation before the thermopile reaches normal operating temperature and the Status Light starts to blink. If the Status Light does not blink after three lighting attempts, check to make sure unit is getting gas. Remove the outer door. Press reset button. Replace outer door. Turn Gas Control Valve/Thermostat knob to “OFF”. Wait 10 minutes, then attempt to light Pilot by following the lighting instructions on the water heater’s label. Look through the view port for the Pilot flame. If Pilot is not visible, the spark igniter or gas supply to the Pilot should be checked. If the Pilot is visible and the Status Light does not blink after 90 seconds of continuous Pilot operation, the Pilot flame may not be heating the thermopile sufficiently (weak Pilot), the thermopile may be defective, or wiring connectors may be loose.
RED LIGHT ON (SOLID)	Pilot light was recently extinguished and the thermopile is cooling down.	Turn Gas Control Valve/Thermostat knob to “OFF”. Wait 10 minutes for the thermopile to cool, then attempt to relight Pilot by following the lighting instructions on the water heater’s label. NOTE: This gas control valve/thermostat has built-in circuitry that requires waiting 10 minutes between lighting attempts. Until the thermopile reaches its normal operating temperature, the Status Light will not blink, even if the Pilot is lit. It may take up to 90 seconds of continuous Pilot operation before the thermopile reaches normal operating temperature and the Status Light starts to blink.
1 FLASH (EVERY 3 SECONDS)	Normal operation.	No corrective action necessary.
2 FLASHES	Pilot is lit but the thermopile is not producing the required output voltage.	Turn Gas Control Valve/Thermostat knob to “OFF”. The thermopile is probably defective, but loose wiring connections or a weak Pilot flame can also cause this symptom.

LED STATUS	PROBLEM	CORRECTIVE ACTION
4 FLASHES	The Gas Control Valve's temperature sensor has detected that the water temperature was too high. Once this condition occurs, the Main Burner and the Pilot Light will be shut off. Since the Pilot light will be off, should this condition occur, this Flash Code will only be displayed immediately after the Pilot has been relit. Turn Gas Control Valve/Thermostat knob to "OFF".	Relight pilot and verify 4 flashes. If 4 flashes are observed, turn Gas Control Valve/Thermostat knob to "OFF". Turn Main Gas Supply "OFF." Replace the Gas Control Valve/Thermostat. See "Removing and Replacing the Gas Control Valve/ Thermostat."
5 FLASHES	The temperature sensor (thermistor) is defective.	Turn Gas Control Valve/Thermostat knob to "OFF". Replace the temperature sensor (thermistor).
7 FLASHES	Gas Control Valve failure.	Turn Gas Control Valve/Thermostat knob to "OFF". Turn Main Gas Supply "OFF". Replace the Gas Control Valve/Thermostat. See "Removing and Replacing the Gas Control Valve/ Thermostat."
8 FLASHES	This condition only appears if the gas control/temperature knob has been turned off and the thermopile continued to produce electric power. This condition can occur if the thermopile does not cool down as quickly as expected when the unit is shut off. This condition can also occur if the gas control/temperature knob has been turned off and the pilot continues to operate because the pilot valve is stuck in the open position.	Make sure that the gas control valve/thermostat knob is set to "OFF". Wait one minute. Remove the outer door. Look through the sight glass for a pilot flame. If a pilot flame is observed with the gas control valve/thermostat knob set to the "OFF" position, the pilot valve is stuck open. Turn the main gas supply "OFF". Replace the gas control valve/thermostat. For instructions, see "Removing and Replacing the Gas Control Valve/ Thermostat." If the pilot flame is not observed when the gas control valve/thermostat knob is set to the "OFF" position, wait 10 minutes for the thermopile to cool, then attempt to relight the pilot by following the lighting instructions on the water heater's label. If this condition returns, replace the gas control valve/thermostat. See "Removing And Replacing The Gas Control Valve/Thermostat" for instructions.

NOTES

NOTES



500 Tennessee Waltz Parkway, Ashland City, TN 37015
Phone: 800-527-1953 • Fax: 800-644-9306
www.hotwater.com

LIMITED WARRANTY
RESIDENTIAL TYPE WATER HEATER FOR INSTALLATION IN A SINGLE FAMILY DWELLING

When referencing the water heater for service or warranty, please refer to the model number printed on the data plate. Use the table below to determine the warranty term.

MODEL NUMBER EXAMPLE: ENS 40
Warranty Code

MODEL NUMBER EXAMPLE: XCR 50
Warranty Code

Warranty Code:	E, F or G	P or X	H	PX
Tank Warranty Term:	6 Years	10 Years	8 Years	10 Years
Parts Warranty Term:	6 Years	10 Years	8 Years	10 Years

A. WHO IS COVERED

A.O. SMITH, INC. AND ITS SUPPLIERS, (herein collectively referred to as "Manufacturer") warrants only to the original consumer purchaser (hereinafter "Owner") of the water heater so long as he or she continuously occupies the single family dwelling in which this water heater is initially installed for the period specified below. This warranty is not transferable. The warranty is restricted to the water heater used in a single-family residence in the United States of America. This warranty is reduced to one year if the water heater is used in a commercial, or industrial application, or if the water heater is used to supply more than one dwelling unit.

B. WHEN IT IS COVERED

The water heater is warranted only when it is installed, operated and maintained in accordance with the printed instructions accompanying the water heater. A water heater should be installed in such a manner that, if the tank or any connection thereto should leak, the resulting flow of water will not cause damage to the area in which it is installed. A water heater's temperature and pressure relief valve must be piped to the nearest drain to avoid damage in the event the valve is actuated. For detailed instructions read the manual accompanying the water heater and review drawings in the manual.

C. WHAT THE MANUFACTURER WILL DO AND THE PERIOD OF COVERAGE

1. The Inner Tank – If the inner tank leaks within the warranty period listed on the data plate label after the original installation, Manufacturer will furnish a new water heater of Manufacturer's then prevailing comparable model. If industry standards, product improvements or product obsolescence prohibit Manufacturer from furnishing an identical model replacement water heater under this warranty, the Owner will be furnished with a new water heater of comparable capacity and functionality; however, the Owner will be charged for the additional value of the item(s) which Manufacturer has incorporated in the replacement water heater.
2. Component Part – If any component part other than the inner tank proves to Manufacturer's satisfaction to be defective in material or workmanship within the warranty period listed above, the Manufacturer will furnish the Owner with a replacement for the defective part(s). Anode rods are consumable maintenance parts and are excluded from warranty coverage.
3. Return of Defective Water Heater and Component Parts – Manufacturer reserves the right to examine the alleged defect in the water heater or component part(s), and it will be the Owners obligation (See paragraph D.5) to return the water heater and/or component part(s) to the Manufacturer.
   a. When returning a water heater it must include all component parts and the data plate label.
   b. When returning component part(s), they must be individually tagged and identified with the water heater's product number, model number, serial number, date of purchase and date of installation.

D. WHAT THIS WARRANTY DOES NOT COVER

1. THE LIMITED WARRANTY STATED HEREIN IS IN LIEU OF ANY AND ALL WARRANTIES, EXPRESS OR IMPLIED (WHETHER WRITTEN OR ORAL), INCLUDING, BUT NOT LIMITED TO, THE IMPLIED WARRANTIES OF MERCHANTABILITY AND FITNESS FOR A PARTICULAR PURPOSE.
2. MANUFACTURER SHALL NOT BE LIABLE FOR ANY INCIDENTAL, CONSEQUENTIAL, SPECIAL OR CONTINGENT DAMAGES OR EXPENSES, ARISING, DIRECTLY OR INDIRECTLY, FROM ANY DEFECT IN THE WATER HEATER OR THE USE OF THE WATER HEATER.
3. Manufacturer shall not be liable for any water damage arising, directly or indirectly, from any defect in the water heater or component part(s) or from its use.
4. Manufacturer shall not be liable under this warranty and the unit and/or parts will not be covered, and have no effect if the following events occur:
   a. The water heater or any of its component parts have been subject to misuse, alteration, neglect or accident; or
   b. The water heater has not been installed in accordance with the applicable local plumbing and/or building code(s) and/or regulations or in their absence, with the latest issue of the National Electric Code, and/or other applicable Codes; or
   c. The water heater is not installed, operated and maintained in accordance with the printed Manufacturer's instructions, including if the water heater has any additional aftermarket equipment introduced into the sealed system not approved by the manufacturer; or
   d. The water heater or any of its component parts are damaged or fails from operation with an empty or partially empty tank (such as, but not limited to elements burned out in a dry tank); or
   e. The water heater or any part has been under water; or
   f. The water heater is exposed to highly corrosive atmospheric conditions; or
   g. The water heater is not continuously supplied with potable water; or
   h. The water heater replacement is requested for reasons of noise, taste, odor, discoloration and/or rust; or
   i. The water heater is not operated within the factory calibrated temperature limits; or
   j. The water heater is supplied or operated with desalinated (deionized) water; or
   k. The water heater is relocated from its original installation location; or
   l. The water heater is installed outdoors (this water heater is intended only for indoor installation); or
   m. The water heater is converted, or is attempted to be converted, from one voltage or wattage to another, if an electric water heater, or from one type gas to another, if a gas water heater; or

(Continued on back)

n. The water heater has not been fired at the factory rated input and fuel for which it was factory built; or
o. The water heater or any of its component parts fail due to sediment build-up; or
p. The water heater does not have installed a temperature and pressure relief valve, certified to ANSI Z21.22 and approved by the American Society of Mechanical Engineers; or
q. The water heater or any of its component parts are exposed to fire, floods, lightning, or any other act of Nature; or
r. The water heater is installed in a closed system without adequate provision for thermal expansion.

5. Except when specifically prohibited by the applicable state law, the Owner, and not the Manufacturer, shall be liable for and shall pay for all charges for labor or other expenses incurred in the removal, repair or replacement of the water heater or any component part(s) claimed to be defective or any expense incurred to remedy any defect in the product. Such charges may include, but are not necessarily limited to:
   a. All freight, shipping, handling and delivery costs of forwarding a new water heater or replacement part(s) to the owner.
   b. All costs necessary or incidental in removing the defective water heater or component part(s) and installing a new water heater or component part(s).
   c. Any material required to complete, and/or permits required for, installation of a new water heater or replacement part(s), and
   d. All costs necessary or incidental in returning the defective water heater or component part(s) to a location designated by the manufacturer.
6. The terms of this Limited Warranty cannot be modified by any person, whether or not he/she claims to represent or act on behalf of the Manufacturer.

E. HOW STATE LAW MAY RELATE TO THIS WARRANTY

Some States do not allow limitations on how long an implied warranty lasts so the above limitation may not apply to you. Similarly, some States do not allow the exclusion or limitation of incidental or consequential damages, so the above limitation or exclusion may not apply to you. Further, this warranty gives you specific legal rights and you may also have other rights, which may vary from State to State.

F. If a failure of this water heater causes damage to property or injury to a person, it is the obligation of the person, insurance carrier or other entity intending to make a claim against the Company to retain the water heater in its condition at the time of the incident. Failure to do so may result in denial of a claim and will be deemed material and prejudicial spoliation of evidence. Damage or injury caused by improper installation, inadequate maintenance or other damage caused after the point of sale will not be the responsibility of the Company. For faster response times, home and building owners are encouraged to work with their homeowner or property insurance carrier before submitting a claim.

G. HOW THE ORIGINAL OWNER CAN MAKE A WARRANTY CLAIM

Use the contact information below whenever any inquiry or request is made, be sure to include the water heater's product number, model number, serial number, date of purchase, date of installation, and location of installation.

FOR TECHNICAL ASSISTANCE, SERVICE OR WARRANTY INFORMATION
PHONE TOLL FREE: 1-800-527-1953
WEBSITE: www.hotwater.com
OR
Write to:A.O. Smith
500 Tennessee Waltz Parkway,
Ashland City, Tennessee 37015.