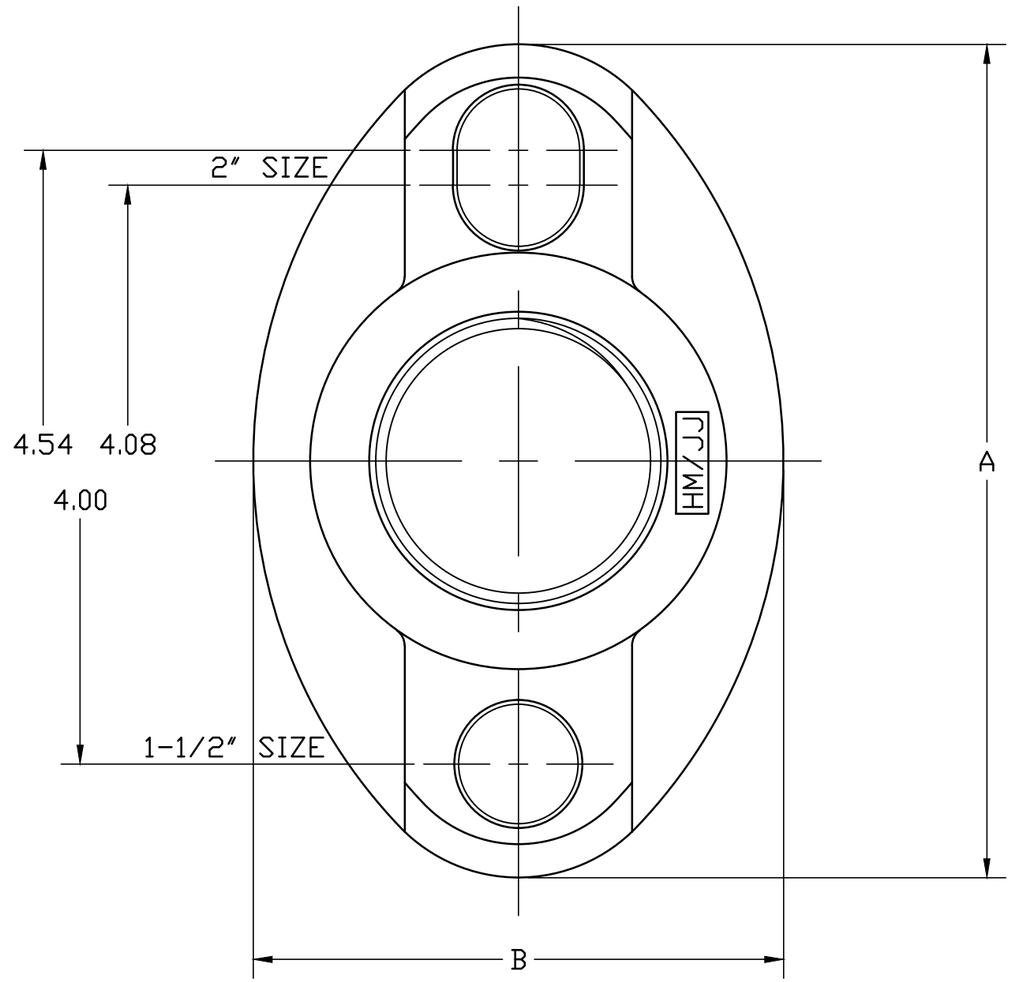

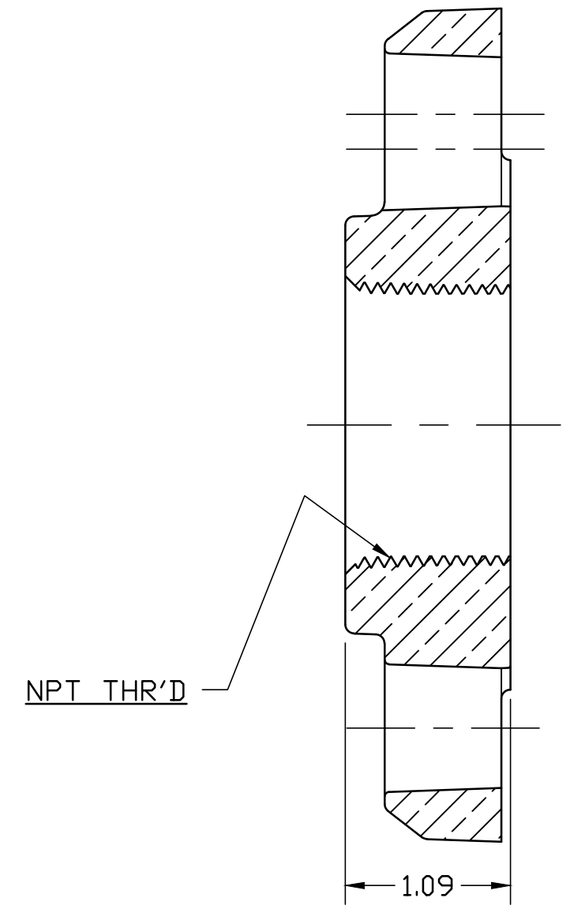

SIZE	A	B	NPT
1 1/2"	5.50	3.50	1-1/2"
2"	6.00	3.94	2"

FILEPATH: PROD-ENG\JJ\SUBMITTALS\E129

REV	ECR	DESCRIPTION	DATE	BY	CHKR

DRFTR	RWB	2/12/10
CHKR		
ENGR		
MGR		
	BY	DATE
STK No:		

JAMES JONES CO.

UNLESS OTHERWISE NOTED
SURFACE PREPARATION:
BREAK CORNER(S) ---- .000
SURFACE FINISH -- XX RMS
TOLERANCE(S):
LINEAR ---------- ± .000
ANGULAR --------- ± 0°00'

THIRD ANGLE PROJECTION

REF. No.

SCALE FULL

MAT'L: CAST LOW LEAD BRASS ALLOY

DESCR. 1-1/2" & 2" LLB FLANGE-WATER METER

PART NUMBER E129

PART NUMBER E129
JJ\MRKTNG