KOHLER GENUINE PARTS

Purist®

36" grab bar
K-11895-S

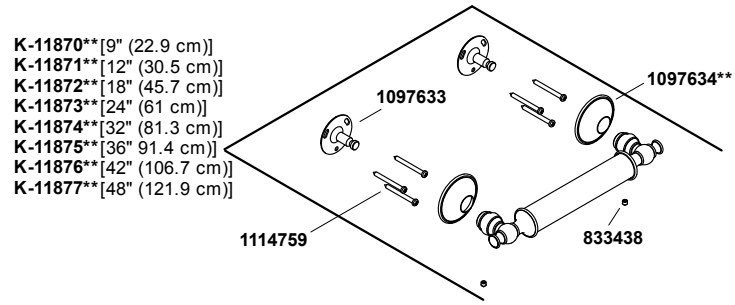

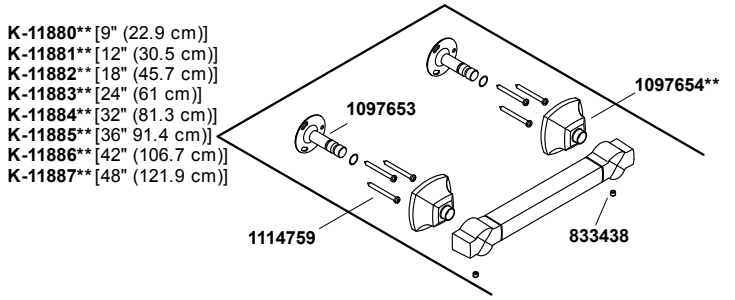

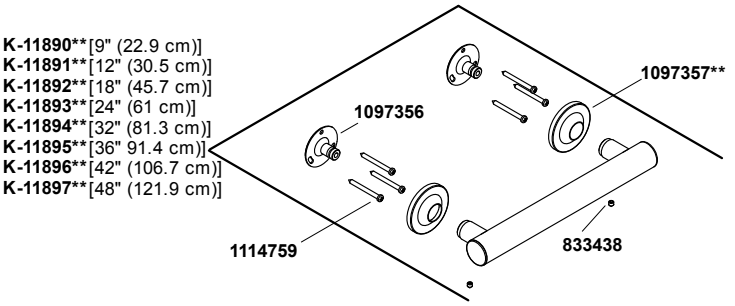

1118276-8- **B**

© 2013 Kohler Co.

printed on