Water Connects Us®

Code No. 0816452
Rev. 5 (06/16)

INSTALLATION INSTRUCTIONS FOR RETROFIT AND COMPLETE VALVE INSTALLATION



8100 Series Complete Flushometer Models

8100 Series Optima Plus valves are complete flushometer valves and ideal for new installations.

Made in the U.S.A.



RESS Series Retrofit Conversion Kit Models

RESS Optima Plus models are used to convert existing Royal, Regal and Sloan style flushometers to sensor activation.

Optima Plus Water Closet Models can be furnished for the following:

1.6 gpf/6.0 Lpf	For Low Consumption Bowls
2.4 gpf/9.0 Lpf	For 9 Liter European Water Closets
3.5 gpf/13.2 Lpf	For older Water Closets

Optima Plus Urinal Models can be furnished for the following:

0.5 gpf/1.9 Lpf	For Wash Down Urinals
1.0 gpf/3.8 Lpf	For Low Consumption Urinals
1.5 gpf/5.7 Lpf	For older Siphon Jet Urinals
3.5 gpf/13.2 Lpf	For older Blow Out Urinals

LIMITED WARRANTY

Unless otherwise noted, Sloan Valve Company warrants this product, manufactured and sold for commercial or industrial uses, to be free from defects in material and workmanship for a period of three (3) years (one (1) year for special finishes, SF faucets, PWT electronics and 30 days for PWT software) from the date of first purchase. During this period, Sloan Valve Company will, at its option, repair, replace, or refund the purchase price of any product which fails to conform with this warranty under normal use and service. This shall be the sole and exclusive remedy under this warranty. Products must be returned to Sloan Valve Company, at customer's cost. No claims will be allowed for labor, transportation or other costs. Damage caused by misuse or improper installation are all excluded from this warranty. This warranty extends only to person or organizations who purchase Sloan Valve Company's products directly from Sloan Valve Company for purpose of resale. This warranty does not cover the life of the batteries.

THERE ARE NO WARRANTIES WHICH EXTEND BEYOND THE DESCRIPTION ON THE FACE HEREOF. IN NO EVENT IS SLOAN VALVE COMPANY RESPONSIBLE FOR ANY CONSEQUENTIAL DAMAGES OF ANY MEASURE WHATSOEVER.

PRIOR TO INSTALLATION

Prior to installing the Optima Plus flushometer, install the items listed below as illustrated in the Rough-in Diagram. (New installations only.)

- Closet or Urinal fixture
- Drain line
- Water supply line

Important:

- **ALL PLUMBING SHOULD BE INSTALLED IN ACCORDANCE WITH APPLICABLE CODES AND REGULATIONS.**
- **WATER SUPPLY LINES MUST BE SIZED TO PROVIDE AN ADEQUATE VOLUME OF WATER FOR EACH FIXTURE.**
- **WHEN INSTALLING A FLUSHOMETER, IT IS IMPORTANT THAT THE FLUSH MODEL MATCHES THE REQUIREMENTS OF THE PLUMBING FIXTURE.**
- **FLUSH ALL WATER LINES PRIOR TO MAKING CONNECTIONS.**

The Optima Plus is designed to operate with 15 to 100 PSI (104 to 689 kPa) of water pressure. **THE MINIMUM PRESSURE REQUIRED TO THE VALVE IS DETERMINED BY THE TYPE OF FIXTURE SELECTED.** Consult fixture manufacturer for pressure requirements.

Most Low Consumption water closets (1.6 gallon/6 liter) require a minimum flowing pressure of 25 psi (172 kPa).

TOOLS REQUIRED FOR INSTALLATION

- Slotted screwdriver to adjust control stop.
- Sloan A-50 Super-Wrench™, Sloan A-109 Plier Wrench or smooth jawed spud wrench for couplings.
- Strap wrench (supplied) to install Optima Plus to valve body.
- 7/64" hex wrench (supplied) to secure Optima Plus cover to base plate.

VALVE ROUGH-IN

Typical Water Closet Installation

Model 8110/8111
Reference for RESS-C Retrofit

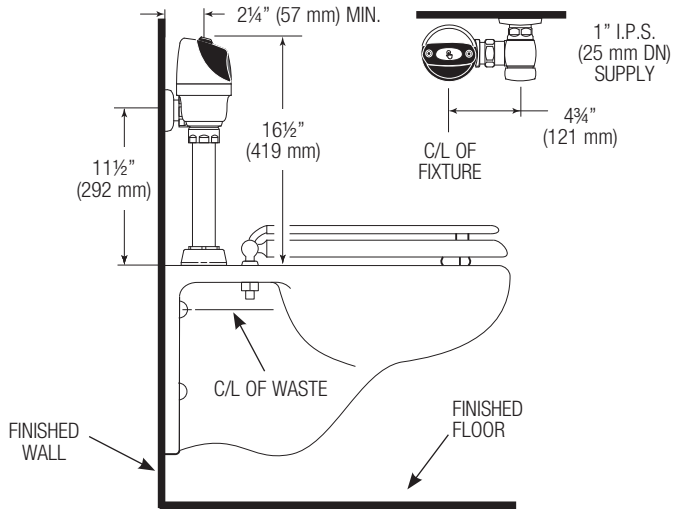

When installing the Optima Plus in a handicap stall:
Per the ADA Guidelines (section 604.9.4) it is recommended that the grab bars be split or shifted to the wide side of the stall.

!!! IMPORTANT !!!

With the exception of Control Stop Inlet, DO NOT use pipe sealant or plumbing grease on any valve component or coupling!

!!! IMPORTANT !!!

Protect the chrome or special finish of Sloan Flushometers — DO NOT USE toothed tools to install or service these valves. Use a Sloan A-50 Super-Wrench™, Sloan A-109 Plier Wrench or smooth jawed spud wrench to secure all couplings. Also see "Care and Cleaning" section of this manual.

!!! IMPORTANT !!!

LAWS AND REGULATIONS PROHIBIT THE USE OF HIGHER FLUSHING VOLUMES THAN LISTED ON FIXTURES OR FLUSHOMETERS.

!!! IMPORTANT !!!

This product contains mechanical and/or electrical components that are subject to normal wear. These components should be checked on a regular basis and replaced as needed to maintain the valve's performance.

!!! IMPORTANT !!!

The Strap Wrench provided with Optima Plus is a convenience tool and is not to be used to remove or install the Flushometer Couplings. Use Strap Wrench ONLY to install Optima Plus Locking Ring.

When assistance is required, please contact Sloan Technical Support at: 1-888-SLOAN-14 (1-888-756-2614) or visit us online at: www.sloanvalve.com

High Rough-in Water Closet Installation

Models 8113, 8115 & 8116

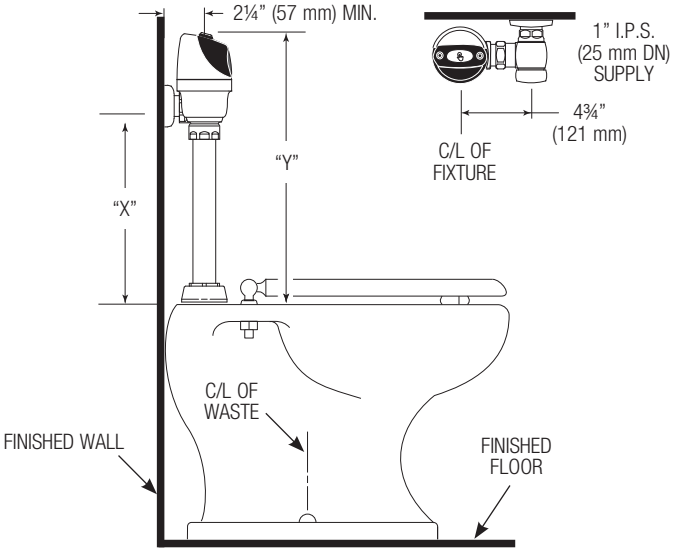

Model 8115 & 8116 valves are designed for installations where the water supply is roughed-in 24" - 27" (610 mm - 686 mm) above the top of the water closet.

For new installations, Sloan strongly recommends the use of our Model 8111 which has a shorter installation height.

Model	"X"	"Y"
8113	16" (406 mm)	21" (533 mm)
8115	24" (610 mm)	29" (737 mm)
8116	27" (686 mm)	32" (813 mm)

Typical Urinal Installation

Models 8180 & 8186
Reference for RESS-U Retrofit

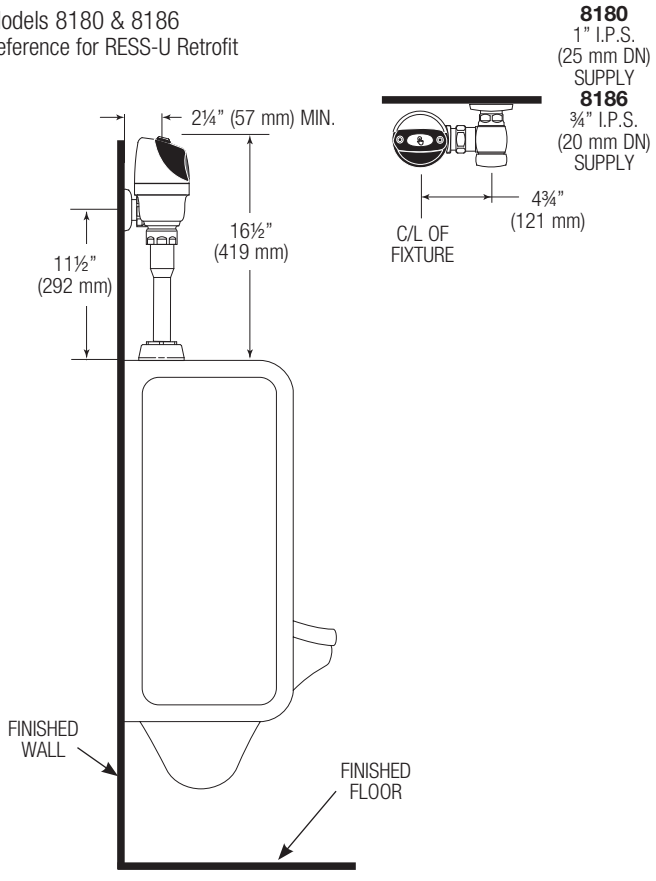

1 - FOR COMPLETE VALVE INSTALLATION START HERE. FOR RESS RETROFIT INSTALLATION, START AT STEP 6. INSTALL OPTIONAL SWEAT SOLDER ADAPTER (ONLY IF YOUR SUPPLY PIPE DOES NOT HAVE A MALE THREAD)

A Measure from finished wall to C/L of Fixture Spud. Cut pipe 1¼" (32 mm) shorter than this measurement. Chamfer O.D. and I.D. of water supply pipe.

B Slide Threaded Adapter fully onto pipe.

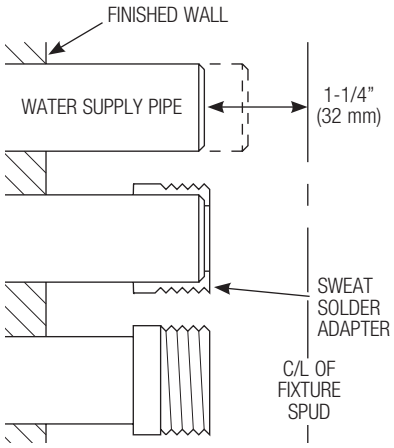

C Sweat solder the Adapter to pipe.

!!! IMPORTANT !!!

With the exception of Control Stop Inlet, DO NOT use pipe sealant or plumbing grease on any valve component or coupling!

2 - INSTALL COVER TUBE, WALL FLANGE AND CONTROL STOP TO SUPPLY PIPE

A Measure from finished wall to first thread of Adapter or threaded supply pipe (dimension "X"). Cut Cover Tube to this length.

B Slide Cover Tube over pipe. Slide Wall Flange over Cover Tube until against wall.

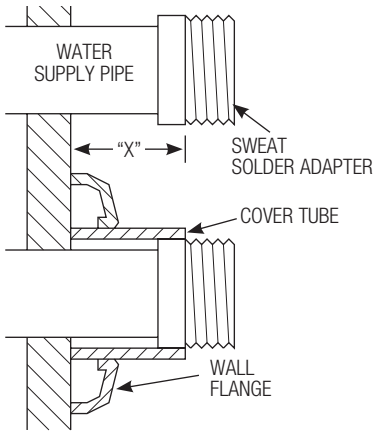

C Thread Control Stop onto pipe. Tighten with a wrench.

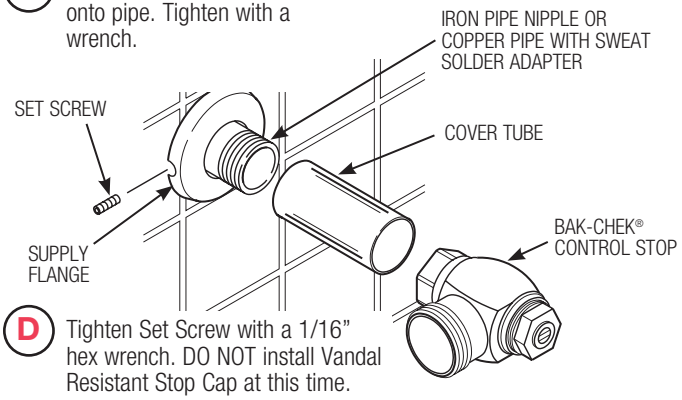

D Tighten Set Screw with a 1/16" hex wrench. DO NOT install Vandal Resistant Stop Cap at this time.

3 - FLUSH OUT SUPPLY LINE

A Open Control Stop.

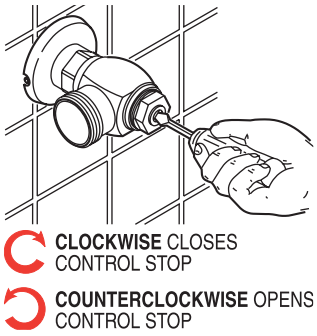

B Turn on water supply to flush line of any debris or sediment.

C Close Control Stop.

4 - INSTALL VACUUM BREAKER FLUSH CONNECTION

NOTE

If cutting Vacuum Breaker Tube to size, note that Critical Line (C/L) on Vacuum Breaker must typically be 6" (152 mm) above fixture. Consult Code for details.

A Slide Spud Coupling, Nylon Slip Gasket, Rubber Gasket and Spud Flange over Vacuum Breaker Tube.

B Insert Tube into Fixture Spud.

C Hand tighten Spud Coupling onto Fixture Spud.

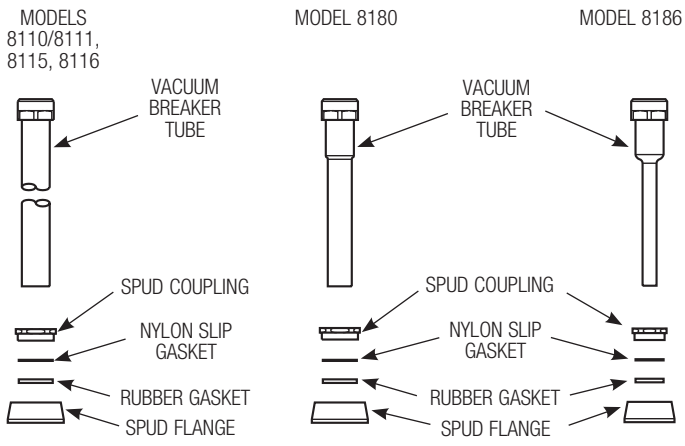

5 - INSTALL FLUSHOMETER

A Lubricate tailpiece O-ring with water. Insert Adjustable Tailpiece into Control Stop. Tighten Tailpiece Coupling by hand.

B Align Flushometer directly above the Vacuum Breaker Flush Connection by sliding the Flushometer Body IN or OUT as needed. Tighten Vacuum Breaker Coupling by hand.



NOTE

Maximum adjustment of the Sloan Adjustable Tailpiece is 1/2" (13 mm) IN or OUT from the standard 4-3/4" (121 mm) (centerline of Flushometer to centerline of Control Stop).

If roughing-in measurement exceeds 5-1/4" (133 mm), consult factory for longer tailpiece.

C Align Flushometer Body and securely tighten first the Tailpiece Coupling (1), then the Vacuum Breaker Coupling (2), and finally the Spud Coupling (3). Use a wrench to tighten these couplings in the order shown.

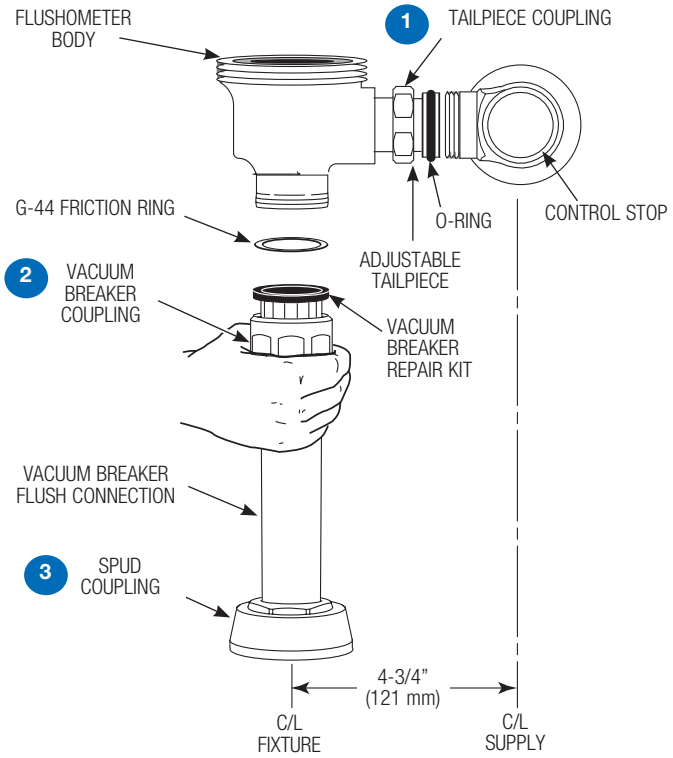

6 - WHEN RETROFITTING AN EXISTING VALVE, START HERE. REMOVE COMPONENTS FROM EXISTING FLUSHOMETER (RESS RETROFIT INSTALLATIONS ONLY)

A Remove Control Stop Cap.

B Turn off water supply at Control Stop. Push Valve Handle to relieve water pressure.

C Remove Outside and Inside Covers and old Inside Parts Kit.

D Remove old Handle Assembly and Gasket.

E Install Chrome Handle Cap with Gasket to handle opening on Flushometer Body. Tighten Chrome Handle Cap securely.

NOTE

An extra H-553 Tail O-ring is included in the event leakage occurs if the valve is repositioned during the installation of the new Optima Plus. USE ONLY AS NEEDED.

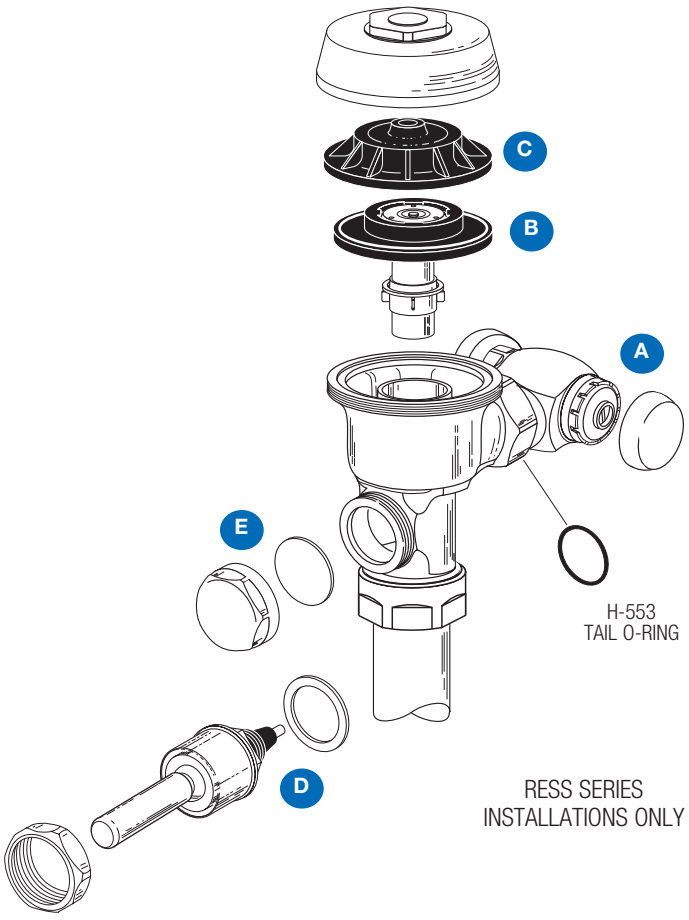

7 - OPTIMA PLUS FLUSH VOLUME

The Flush Volume of the Optima Plus is controlled by the Regulator in the Flex Tube Diaphragm Kit. Regulators are identified by color.

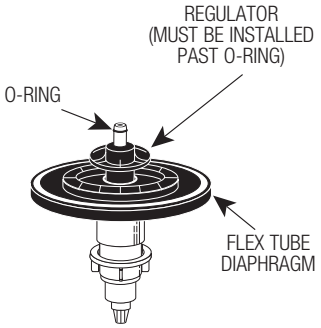

!!! IMPORTANT !!!

LAWS AND REGULATIONS PROHIBIT THE USE OF HIGHER FLUSHING VOLUMES THAN LISTED ON FIXTURES OR FLUSHOMETERS.

8 - ASSEMBLE FLEX TUBE DIAPHRAGM TO OPTIMA PLUS ASSEMBLY

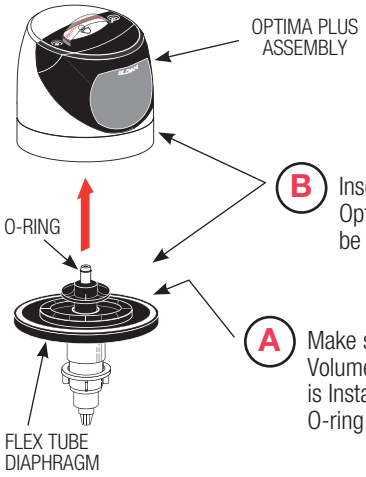

B Insert metal end into hole in base of Optima Plus Assembly. O-ring must be fully inserted into the hole.

A Make sure Flush Volume Regulator is Installed Past O-ring.

To facilitate installation, wet the diaphragm assembly (on top or completely).

C Push Diaphragm securely against underside of Optima Plus Assembly. Place entire Assembly onto the Valve Body.

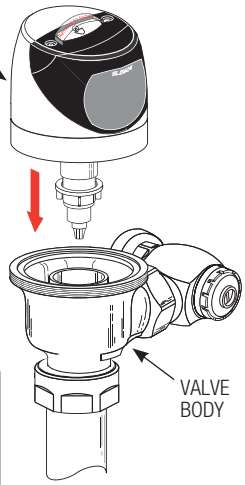

NOTE

Sensor Lens must face directly forward. Rotating the Sensor to either side will decrease the Sensor's ability to detect a target.

9 - TIGHTEN LOCKING RING

A Thread Locking Ring onto Valve Body.

B Use Strap Wrench provided to tightly secure Locking Ring.

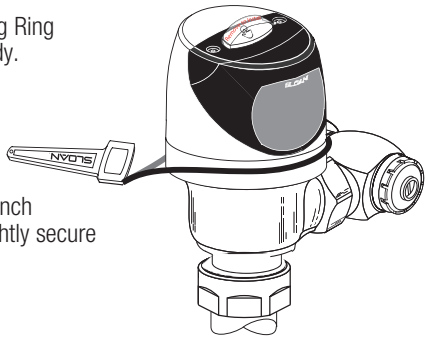

!!! IMPORTANT !!!

The Locking Ring must be installed down past the valve body threads by at least one thread. If difficulty is experienced installing the Locking Ring, turn the Locking Ring back and forth, each time working it further down the threads. The Locking Ring will act as a thread chaser in the event there has been a build-up of matter on the threads of the old valve body.

If retrofitting the Optima Plus onto a Zurn valve body, a special Locking Ring must be used (identified by a machined groove around the ring).

Order the Optima Plus with the "Z" variation to receive the unit supplied with this Ring.

10 - REMOVE TAB TO ACTIVATE SENSOR MODULE

A Remove all removable objects in sensor view area and remove the Tab located over the Override Button to activate the Sensor Module. The sensor module will perform the start-up routine for one minute with LED blinking.

B For the first ten (10) minutes of operation, a Visible Red Light flashes in the Sensing Window of the Optima Plus Flushometer when a user is detected.

NOTE

The self adaptive sensor automatically adapts to the surrounding enviroment when the tab on the override button is removed. No manual adjustments are required. Start-up mode will take approximately one (1) minute to complete its cycle and it is important that no non-permanent (i.e. a wall or stall door) target is present at this time. If the target is permanent, the sensor will adapt itself around this target. A 3 seconds long Red light on and followed with slow Red light blinking in sensor window indicates sensor is in the start-up mode. When the start-up cycle is completed after one (1) (indicate new lithium battery installed) or two (2) (indicate new alkaline battery installed) 2 seconds long Red lights, there will be no light visible in the sensor window.

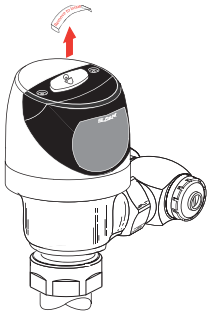

11 - TEST SENSOR OPERATION

The Optima Plus has a factory set sensing range:
Water Closet Models - 22" to 42" (559 mm to 1067 mm)
Urinal Models - 15" to 30" (381 mm to 762 mm)

The factory setting should be satisfactory for most installations. If a range adjustment is required, refer to the Range Adjustment instructions on this page.

A Test Sensor with Cover in Place.

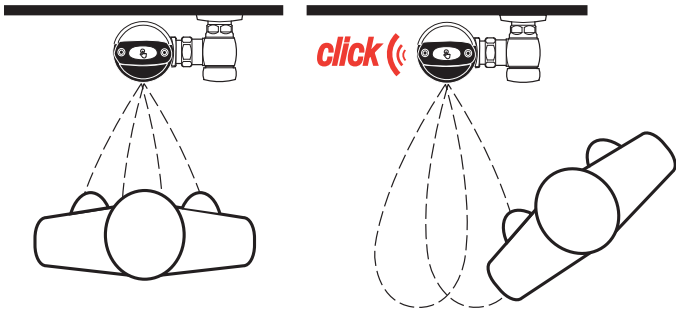

B Stand in front of Sensor for ten (10) seconds

C Step away from Sensor and listen for "CLICK."

12 - ADJUST CONTROL STOP AND INSTALL VANDAL RESISTANT STOP CAP

A Open Control Stop COUNTERCLOCKWISE ½ turn from closed position.

B Activate Flushometer by placing hand in front of Optima Plus Sensor Lens for ten (10) seconds (or press override button) and then moving it away.

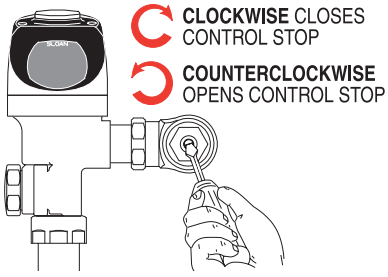

C Adjust Control Stop after each flush until the rate of flow delivered properly cleanses the fixture.

!!! IMPORTANT !!!

The flushometer is engineered for quiet operation. Excessive water flow creates noise, while too little water flow may not satisfy the needs of the fixture. Proper adjustment is made when plumbing fixture is cleansed after each flush without splashing water out from the lip AND a quiet flushing cycle is achieved.

!!! IMPORTANT !!!

The Control Stop should never be opened to the point where the flow from the valve exceeds the flow capability of the fixture. In the event of a valve failure, the fixture must be able to accommodate a continuous flow from the valve.

D Install Control Stop Cap onto Control Stop. For RESS retrofit applications, reuse Stop Cap from existing valve. In complete valve installations, a new Stop Cap is provided.
For G2 models, follow the instructions packaged with the Free Spinning Vandal Resistant Stop Cap.

OPERATION

1. A continuous, INVISIBLE light beam is emitted from the Optima Plus Sensor.
2. As the user enters the beam's effective range, 22 to 42 inches (559 mm to 1067 mm) for closet installations and 15 to 30 inches (381 mm to 762 mm) for urinal installations, the beam is reflected into the Scanner Window to activate the Output Circuit. Once activated, the Output Circuit continues in a "hold" mode for as long as the user remains within the effective range of the sensor.

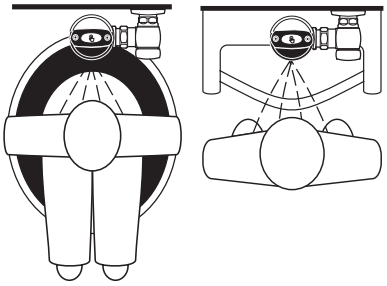

3. When the user steps away, the loss of reflected light initiates an electrical "one-time" signal that activates the flushing cycle to flush the fixture. The Circuit automatically resets and is ready for the next user.

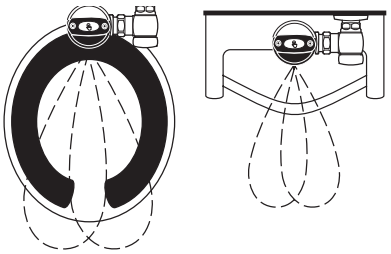

RANGE ADJUSTMENT (ADJUST ONLY IF NECESSARY)

The Optima Plus has a factory set sensing range:
Water Closet Models - 22" to 42" (559 mm to 1067 mm)
Urinal Models - 15" to 30" (381 mm to 762 mm)

The Factory setting should be satisfactory for most installations.

If the range is too short (i.e., not picking up users) or too long (i.e., picking up opposite wall or stall door) the range can be adjusted.

Note: Water does not have to be turned off to adjust range.

RANGE ADJUSTMENT PROCEDURE

For the first ten (10) minutes of operation, a Visible Red Light flashes in the Sensing Window of the Optima Plus Flushometer when a user is detected. This Visible Red Light feature can be reactivated by pushing the manual override button more than one minute.

RANGE ADJUSTMENT (ADJUST ONLY IF NECESSARY) - CONTINUED

Make sure to remove all the non-permanent targets in sensor view area. Push manual override button for 20-30 seconds. the Red LED in the G2 sensor starts slow blinking. Release the button during the LED blinking. The G2 will into distance setting mode. The setting mode will run for one minute.

!!! IMPORTANT !!!

WHEN ADJUSTING RANGE FOR URINAL SENSOR, MAKE SURE TO SET-UP A PROPER TARGET IN FRONT OF URINAL SENSOR.

BATTERY REPLACEMENT

When required, replace batteries with four (4) Alkaline AA-Size Batteries.

Note: Water does not have to be turned off to replace Batteries.

Loosen the two (2) Screws on top of unit. Remove the complete Cover Assembly. Lift the Sensor Module from its Plate. Unplug the Electrical Connector from Battery Compartment Cover. Loosen the Retaining Screw on Battery Compartment Cover and remove Battery Compartment Cover. Install four (4) Alkaline AA-Size Batteries exactly as illustrated.

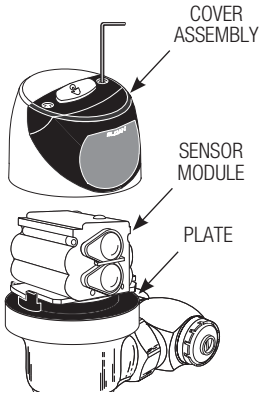

Install Battery Compartment Cover and secure with Retaining Screw. Make certain that Battery Compartment Cover is fully compressed against Gasket to provide a seal; Do Not overtighten. Plug the Electrical Connector into the Battery Compartment Cover. Reinstall the Sensor Module onto the Plate. Reinstall the complete Cover Assembly onto the Plate. Tighten the two (2) Screws on top of the unit.

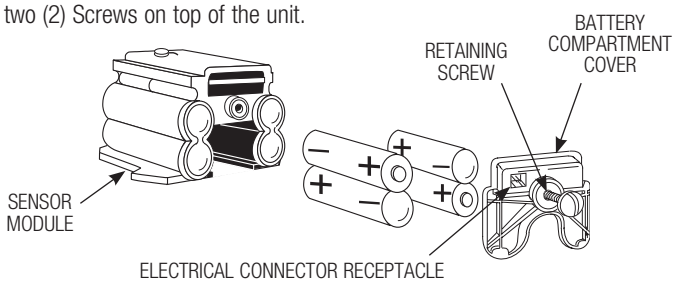

TROUBLESHOOTING

1. Sensor Flashes Continuously Only When User Steps Within Range.
- A. Unit in Start-Up mode; no problem. This feature is active for the first ten (10) minutes of operation.

2. Valve Does Not Flush; Sensor Not Picking Up User.
- A. Range too short; increase the range.

3. Valve Does Not Flush; Sensor Picking Up Opposite Wall or Surface, or Only Flushes When Someone Walks By. Red Light Flashes Continuously for First 10 Minutes Even with No One in Front of the Sensor.
- A. Range too long; shorten range.

4. Valve Does Not Flush Even After Adjustment.
- A. Improper Range Adjustment; Follow Instructions and repeat steps.
- B. Batteries completely used up; replace batteries.
- C. Problem with Electronic Sensor Module; replace Electronic Sensor Module.

5. Unit Flashes 4 Quick Times When User Steps Within Range.
- A. Batteries low; replace batteries.

6. Valve Does Not Shut Off.
- A. Bypass orifice in diaphragm is clogged with dirt or debris, or bypass is clogged by an invisible gelatinous film due to "over-treated" water. Remove flex tube diaphragm and wash under running water.
  Note: Size of Orifice in the Bypass is of utmost importance for the proper metering of water by the valve. DO NOT ENLARGE OR DAMAGE THIS ORIFICE. Replace flex tube diaphragm if cleaning does not correct the problem.
- B. Dirt or debris fouling stem or flex tube diaphragm. Remove flex tube diaphragm and wash under running water.
- C. O-ring on stem of flex tube diaphragm is damaged or worn. Replace O-ring if necessary.
- D. Problem with Electronic Sensor Module; replace Sensor Module.

7. Not Enough Water to Fixture.
- A. Wrong Flush Volume Regulator installed in Flex Tube Diaphragm Kit. Install the correct Regulator (see Step 7 of these instructions).
- B. Wrong Optima Plus model installed; i.e., 1 gpf. urinal installed on 3.5 gal. closet fixture. Replace with proper Optima Plus model, or refer to the G2 Optima Plus Conversion Guide to convert existing unit to the proper model.
- C. Enlarged Bypass in Diaphragm. Replace Flex Tube Diaphragm.
- D. Control Stop not adjusted properly. Readjust Control Stop.
- E. Inadequate volume or pressure at supply. Increase water pressure or supply (flow) to valve. Consult factory for assistance.

8. Too Much Water to Fixture.
- A. Wrong flush volume regulator installed in flex tube diaphragm kit. Install the correct regulator (see Step 7 of these instructions).
- B. Control Stop not adjusted properly. Readjust Control Stop.
- C. Wrong Optima Plus model installed; i.e., 3 gpf. model installed on 1.0 or 1.5 gal. urinal fixture. Replace with proper Optima Plus model, or refer to the G2 Optima Plus Conversion Guide to convert existing unit to the proper model.
- D. Dirt in diaphragm bypass. Clean under running water or replace flex tube diaphragm.

Note: The EBV-46-A Beam Deflector is no longer required or available for the G2 Optima Plus.

When further assistance is required,
please contact Sloan Technical Support at:
1-888-SLOAN-14 (1-888-756-2614)
or visit us online at: www.sloanvalve.com

!!! IMPORTANT !!!

LAWS AND REGULATIONS PROHIBIT THE USE OF HIGHER FLUSHING VOLUMES THAN LISTED ON FIXTURES OR FLUSHOMETERS.

PARTS LIST

Item #	Part #	Description
Items Included with RESS Retrofit and Complete Optima Plus Valves		
1	–	Cover/Ring/Sensor Assembly
2A	EBV-142-A	Cover Assembly (G2 Optima Plus models)
2B	EBV-192-A	Cover Assembly (Sloan Optima Plus models)
3	EBV-130-A	Override Button Assembly (includes screws & hex wrench)
	EBV-132-A	Screws (2) and Hex Wrench Only
4	EBV-131	Lens Window Cover
5	EBV-168	Locking Ring
	EBV-172	Locking Ring - for Zurn valves
6	EBV-129-A-C	Electronic Module - Water Closet
	EBV-129-A-U	Electronic Module - Urinal
7	EBV-134	Cover Rest Plate
8	EBV-145-A	Inside Cover Assembly (includes solenoid)
9	EBV-136-A	Solenoid
10A	†	G2 Optima Plus Flex Tube Diaphragm Assembly
10B	†	Sloan Optima Plus Flex Tube Diaphragm Assembly
11	†	Flush Volume Regulator
12	EBV-1017-A	Handle Cap
13	EBV-91	Range Adjustment Tool
14	EBV-22	Strap Wrench
15	EBV-137	7/64" Hex Wrench
Items Included with Complete Optima Plus Valves Only		
16	H-633-AA	1" (25 mm) Sweat Solder Kit
	H-636-AA	¾" (19 mm) Sweat Solder Kit
17	H-700-A	1" (25 mm) Bak-Chek® Control Stop
	H-700-A	¾" (19 mm) Bak-Chek® Control Stop
18	H-1010-A	Vandal Resistant Stop Cap
19	EBV-36-A	Valve Body
20A	V-600-AA	1½" (38 mm) Vacuum Breaker
20B	V-600-AA	1¼" (32 mm) Vacuum Breaker (Model 8180)
20C	V-600-AA	¾" (19 mm) Vacuum Breaker (Model 8186)
21A	F-5-AT	1½" Spud Coupling Assembly (Models 8110, 8111, 8115 & 8116)
21B	F-5-AU	1¼" Spud Coupling Assembly (Model 8180)
21C	F-5-AW	¾" Spud Coupling Assembly (Model 8186)

† Part No. various depending on valve model, please contact your local Sloan Representative or Sloan Technical Support at: 1-888-SLOAN-14 (1-888-756-2614)

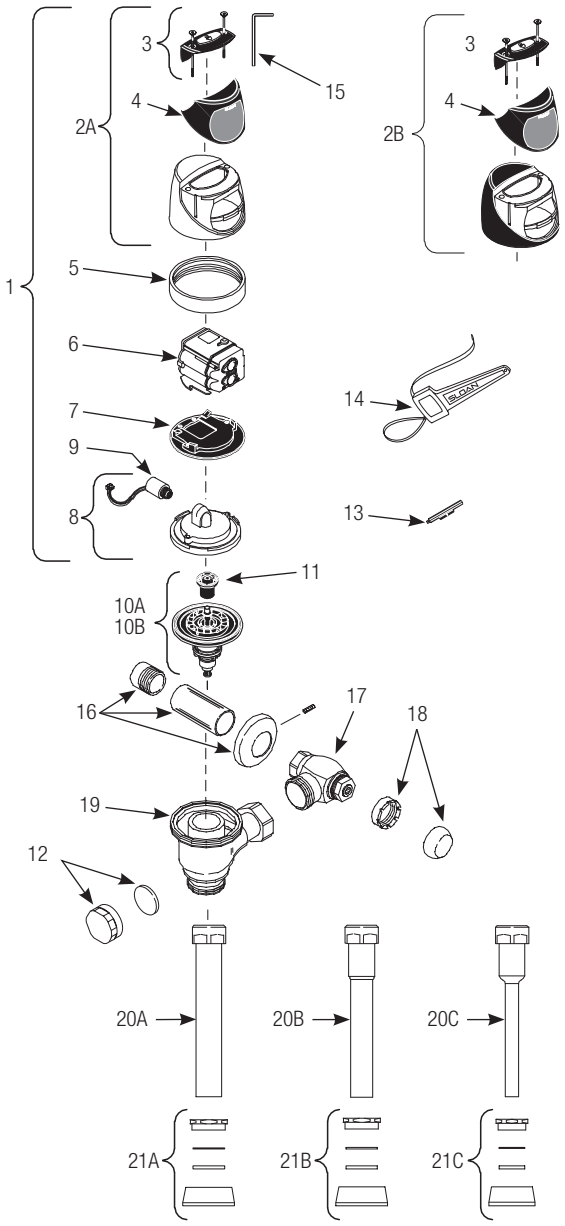



Optima Plus Valve Models Feature Sloan's Exclusive Flex Tube Diaphragm for the ultimate in valve performance, reliability and chloramines resistance.

CARE AND CLEANING

DO NOT use abrasive or chemical cleaners to clean flushometers as they may dull the luster and attack the chrome or special decorative finishes. Use ONLY soap and water, then wipe dry with clean cloth or towel.

While cleaning the bathroom tile, the Flushometer should be protected from any splattering of cleaner. Acids and cleaning fluids can discolor or remove chrome plating.

Manufactured in the U.S.A. by Sloan Valve Company under one or more of the following patents: U.S. Patents: D598,975; 7,124,997. Other Patents Pending. BAK-CHEK®, PARA-FLO®, PERMEX®, TURBO-FLO®.

The information contained in this document is subject to change without notice.

SLOAN • 10500 SEYMOUR AVENUE • FRANKLIN PARK, IL 60131
Phone: 1-800-9-VALVE-9 or 1-800-982-5839 • Fax: 1-800-447-8329 or 1-847-671-4380 • www.sloan.com

Copyright © 2016 SLOAN

Code No: 0816452 – Rev. 5 (06/16)