Product data sheet (PDF)

Axor Montreux
Axor Montreaux Bar Faucet

Description

- Two-handle operation, solid brass
- Ceramic cartridge
- Spout swivels 150-degrees
- Flow rate 1.5 GPM: 30% Water Savings

Finishes	Part no.	List Price
chrome	16806001	$ 513.00
brushed nickel	16806821	$ 744.00

Product image
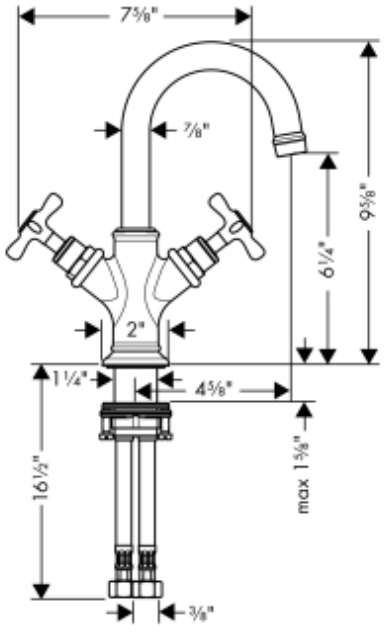
Scale drawing