NOTES:

1. TO INSPECT ASSEMBLY, FOLLOW FIRST ARTICLE AND IN PROCESS INSPECTION SHEET.

2. REMOVE O-RING FROM ADAPTER BEFORE PLATING. RE-ASSEMBLE THE O-RING AFTER PLATING.

3. DO NOT PLATE THIS AREA.

4. DO NOT PLATE THIS PART.

5. REMOVE O-RING FROM FACE PLATE BEFORE PLATING. RE-ASSEMBLE THE O-RING AFTER PLATING.

6. ⟷ INDICATES STROKE DIRECTION FOR SATIN FINISHES ONLY.

7. APPLY THIN COAT OF SILICON GREASE FOR O-RING BEFORE INSTALLATION.

8. APPLY LOCTITE 680.

9. HAND TIGHT.

10. IF O-RINGS ARE MISSING, USE PN 91256 and 91080.

BILL OF MATERIAL (CURRENT LEVEL)

ITEM	PT/ASSY	DESCRIPTION	TYPE	QTY.
1	2092A	SHOWER HEAD 12" DIA.	ASSEMBLY	1
2	12832	FLOW REGULATOR, 1.8 GPM MAX	PART	1

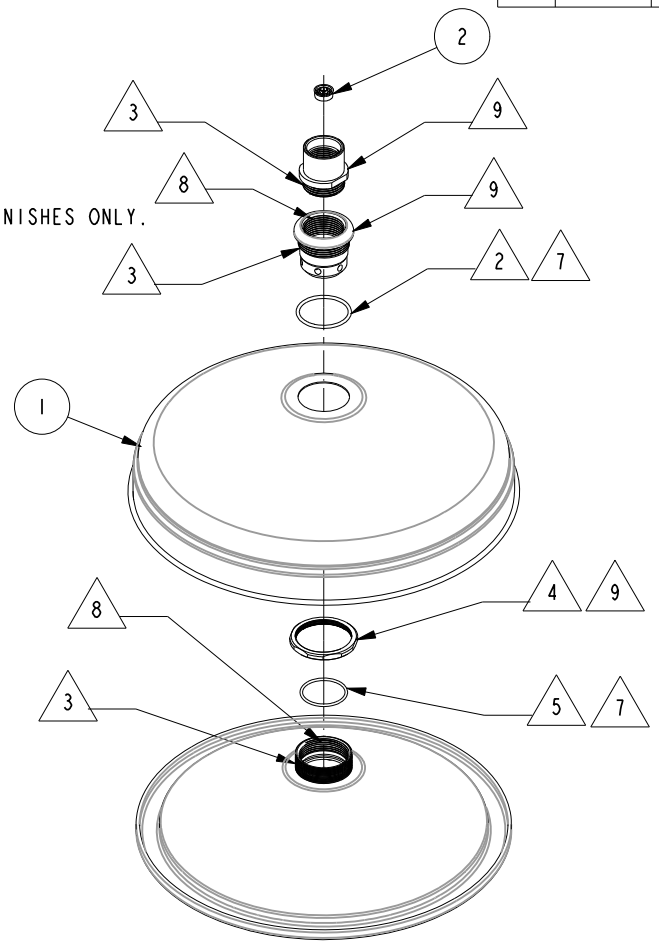

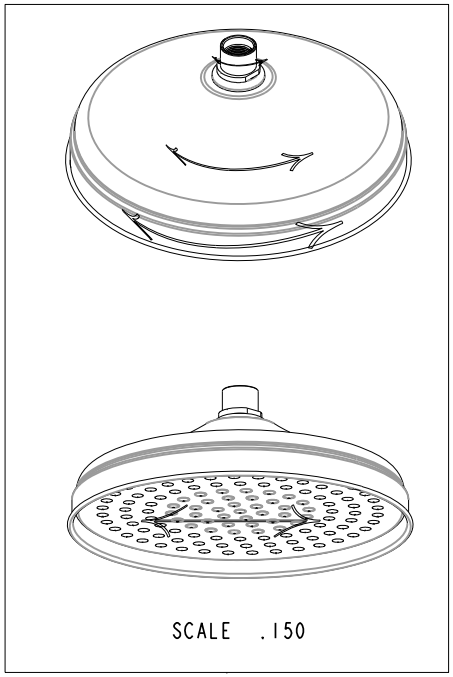

ZONE	REV	DESCRIPTION	DATE	APPROVED
-	F	EN-4300w	03/10/21	R.S.
-	E	EN-3410	01/01/18	C.G.
-	D	EN-2153	7/19/12	-
-	C	EN-1668	04/05/11	-
-	B	EN-1695	01/31/11	-
-	A	EN-1551	05/06/10	-
-	-	EO-0860	09/06/07	-

COPYRIGHT 2005 BRASSTECH, INC. THESE DRAWINGS AND THE DESIGNS DEPICTED HEREIN ARE THE PROPRIETARY PROPERTY OF BRASSTECH. ANY USE OR REPRODUCTION IS SUBJECT TO THE EXPRESS APPROVAL OF BRASSTECH. UNAUTHORIZED USE IS STRICTLY PROHIBITED. ALL RIGHTS RESERVED.

TESTING	-	-	-
ASSEMBLY	-	-	-
PLATING	-	-	-
POLISHING	-	NEXT ASSY	USED ON
MACHINING	-	APPLICATION	
TOOLING FIXTURE #		REMOVE ALL BURRS AND SHARP EDGES	

UNITS ARE: INCHES [MM]
TOLERANCES ARE:
FRACTIONS ±1/16" DECIMALS .X ±.1 [2,5] .XX ±.06 [1,5] ANGLES ±1°
(X.XXX) DENOTES CRITICAL DIMS.
ALL THREADS ARE CRITICAL

DRAWN	JINSON	01/01/18
CHECKED	C.G.	01/01/18
APPROVED	C.G.	01/01/18

BRASSTECH INCORPORATED
2001 CARNEGIE AVE.
SANTA ANA, CA 92705
(949) 417-5207

SHOWER HEAD 12" DIA.

DWG NO. 2092 REV F

SCALE .170 REF. - SHEET 1 OF 2

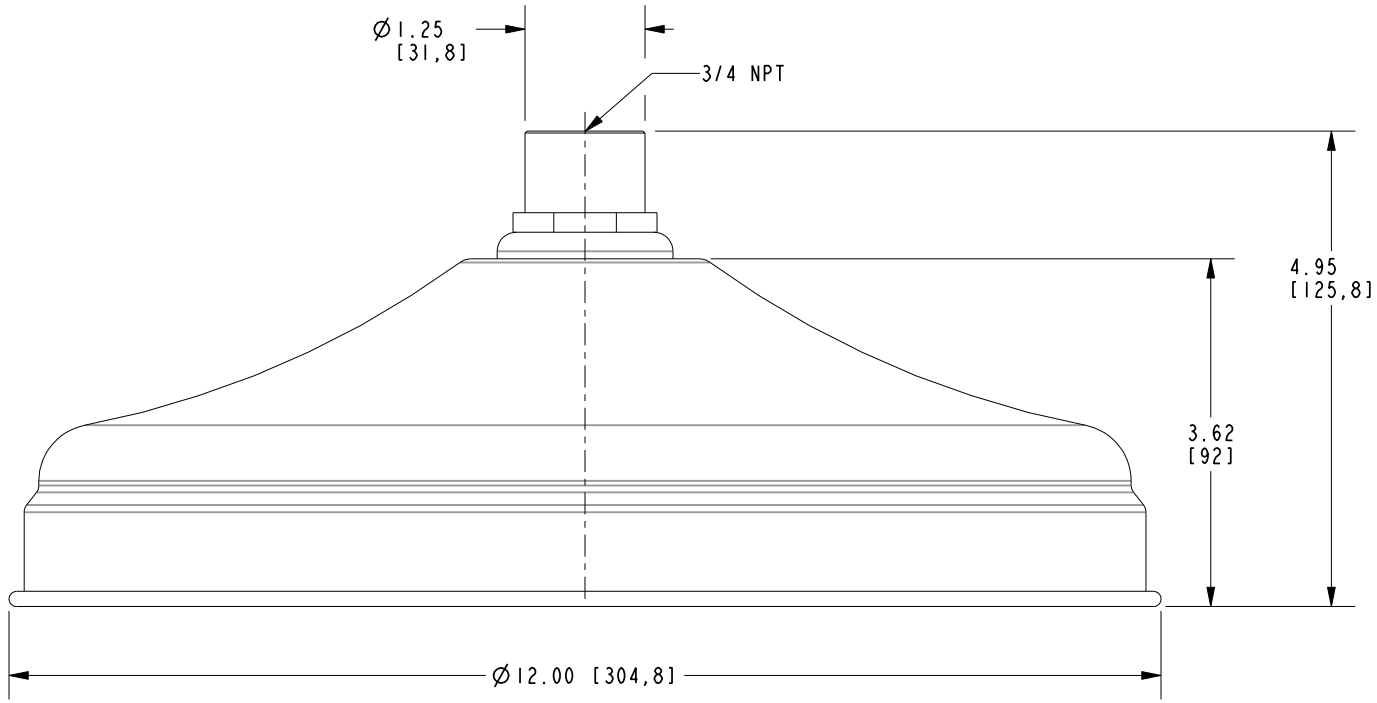

BRASSTECH INCORPORATED

2001 E. CARNEGIE AVE.
SANTA ANA, CA 92705
(949) 417-5207

DWG NO.	REV
2092	F

SCALE	REF.	SHEET
.500	-	2 OF 2