NOTES:

1. FIT / FORM / FUNCTION SHALL FOLLOW PS-E.008.
2. INSPECT CONTNENTS OF CARTON UPON RECEIPT.
3. TANK MODEL NO. AND REVISION SHALL BE: RH-200-SS
4. BOTH ENDS OF FITTING SHALL FIT 1/4" OD TUBE.
5. MAKE SURE THAT UL LABEL IS ON TANK.
6. MAKE SURE THAT WARNING LABEL IS ON TANK.
7. MAKE SURE THE PLASTIC CAPS ARE INSERTED ON THE INLETS.

BILL OF MATERIAL (CURRENT LEVEL)

ITEM	PT/ASSY	DESCRIPTION	TYPE	QTY.
1	5-036-1	TANK 12H X 8W X 9D	PART	1
2	5-036-2	QK CONNECT FITTING	PART	1
3	91721	QK CONNECT FIT'G W/ FILTER	PART	1
4	5-036-3	INSTALLATION INSTRUCTIONS	PART	1
5	5-036-4	UL LABEL	PART	1

WETTED COMPONENTS	MATERIAL
WHITE SQUARE (DIAPHRAGM)	PLASTIC
HOSE TUBE (INLET)	SS303
HEATING COIL	SS316
TOP HALF OF TANK	SS308
BOTTOM HALF OF TANK	SS303

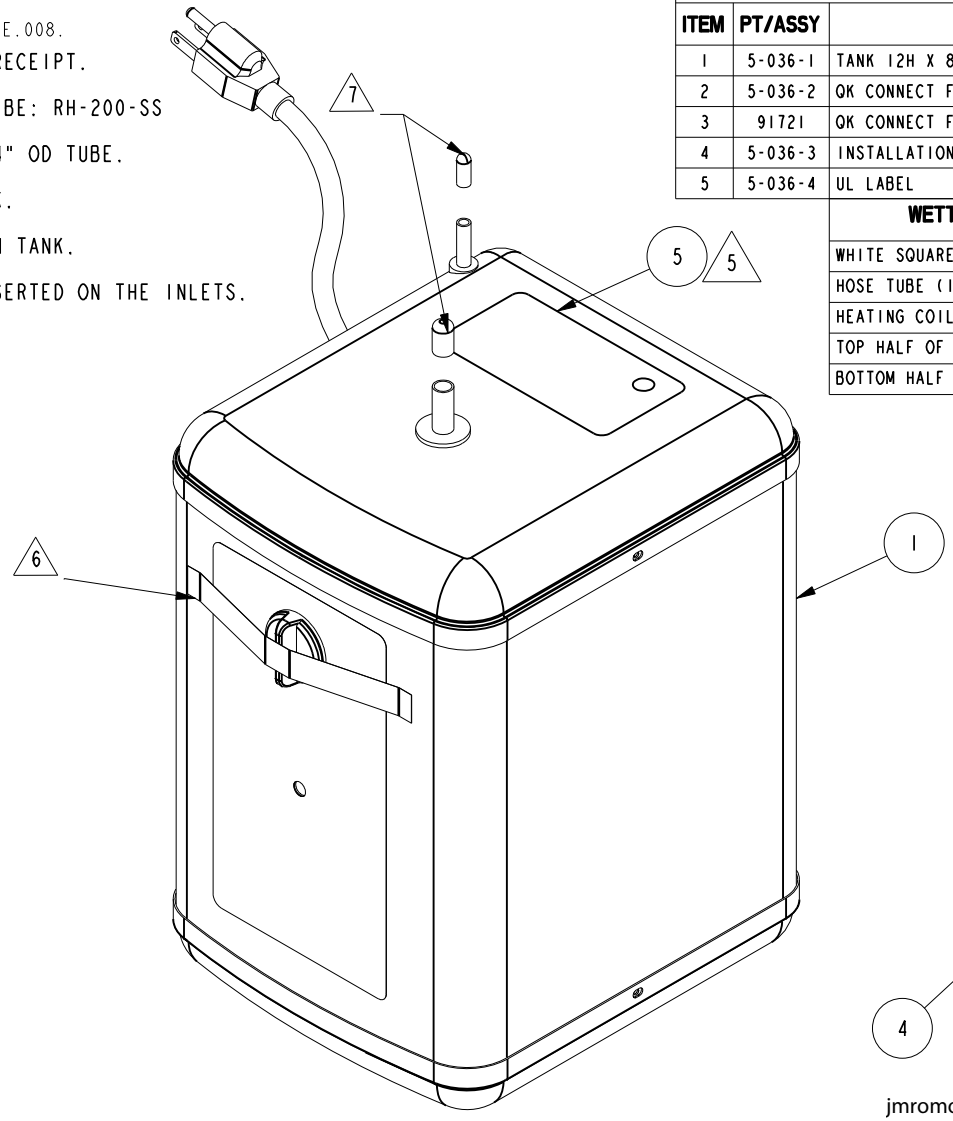

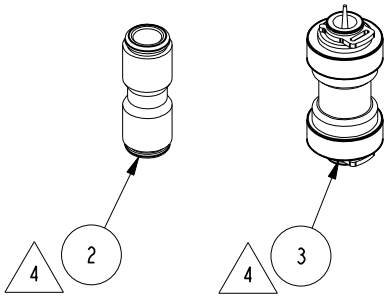

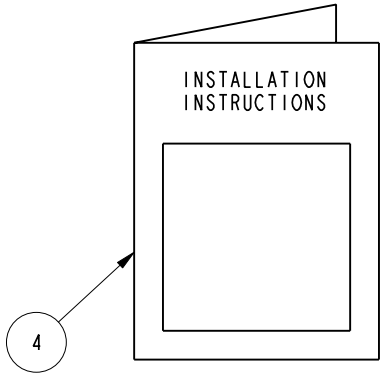

jmromo@brasstech.com

Digitally signed by jmromo@brasstech.com
DN: cn=jmromo@brasstech.com, o=Brasstech, ou=Engineering, email=jmromo@brasstech.com, c=US
Date: 2019.01.30 08:19:37 -08'00'

ZONE	REV	DESCRIPTION	DATE	APPROVED
-	C	EN-3795	01/25/19	V.V.
-	B	EN-3416	09/29/17	J.A.
-	A	EN-3350	07/10/17	J.A.
-	-	EO-0441	10/21/04	-

COPYRIGHT 2005 BRASSTECH, INC. THESE DRAWINGS AND THE DESIGNS DEPICTED HEREIN ARE THE PROPRIETARY PROPERTY OF BRASSTECH. ANY USE OR REPRODUCTION IS SUBJECT TO THE EXPRESS APPROVAL OF BRASSTECH. UNAUTHORIZED USE IS STRICTLY PROHIBITED. ALL RIGHTS RESERVED.

		-	-
TESTING	-	-	-
ASSEMBLY	-	-	-
PLATING	-		
POLISHING	-	NEXT ASSY	USED ON
MACHINING	-	APPLICATION	
TOOLING FIXTURE #		REMOVE ALL BURRS AND SHARP EDGES	

UNITS ARE: INCHES [MM]
TOLERANCES ARE:
FRACTIONS ±1/16" DECIMALS .X ±.1 [2,5] .XX ±.06 [1,5] ANGLES ±1°
(X.XXX) DENOTES CRITICAL DIMS.
ALL THREADS ARE CRITICAL

DRAWN	C.G.	07/10/17
CHECKED	J.A.	07/10/17
APPROVED	J.A.	07/10/17

BRASSTECH INCORPORATED
2001 CARNEGIE AVE.
SANTA ANA, CA 92705
(949) 417-5207

HOT WATER TANK

DWG NO. 5-036_SC REV C

SCALE .300 REF. - SHEET 1 OF 2

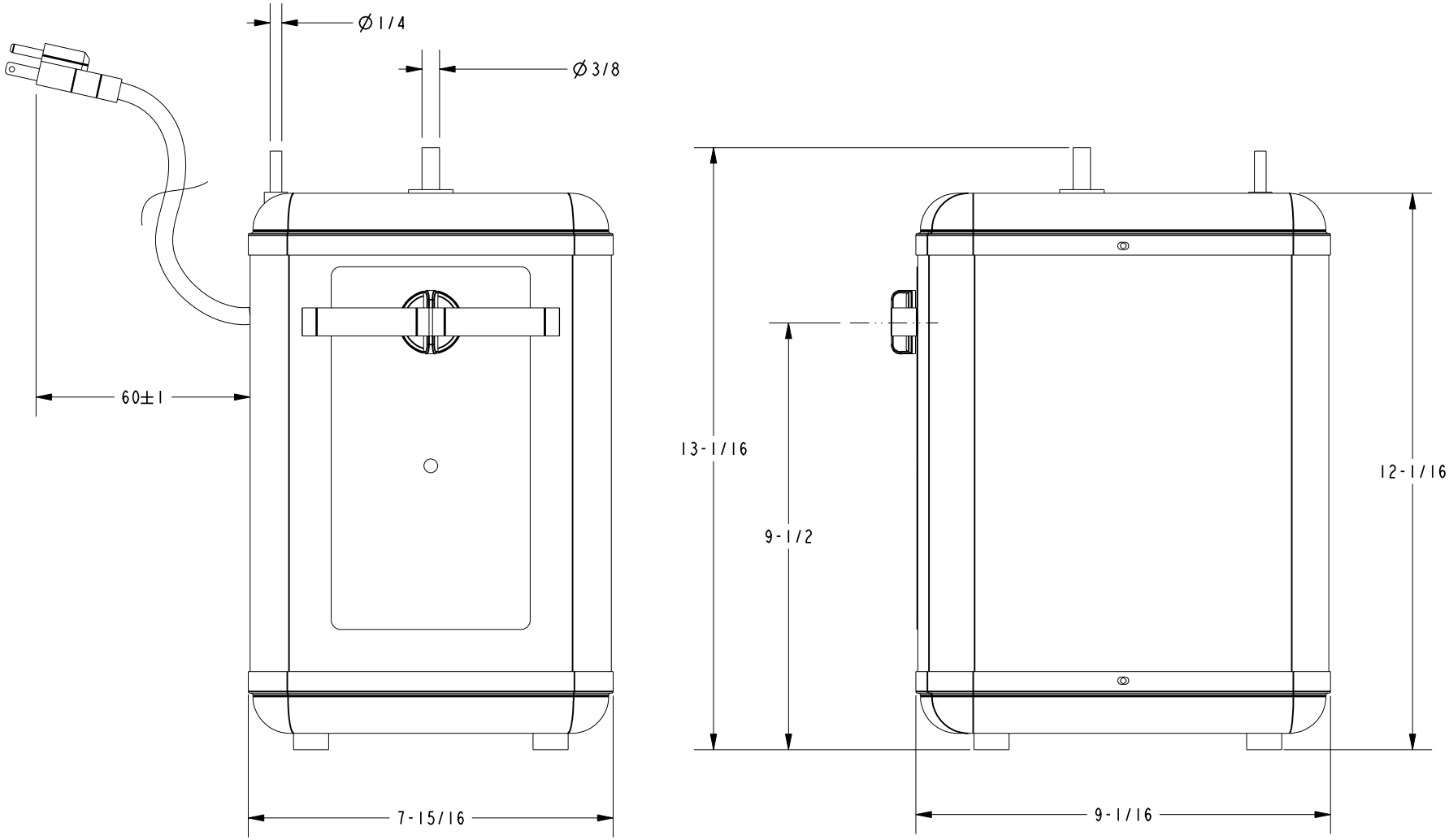

BRASSTECH INCORPORATED
2001 E. CARNEGIE AVE.
SANTA ANA, CA 92705
(949) 417-5207

DWG NO.	REV
5-036_SC	A

SCALE	REF.	SHEET
.300	-	2 OF 2