Lead Free*

Model PR-LF

WATER PRESSURE REDUCING VALVE
(36LF Series)

Job Name:	**Contractor:**
Job Location:	**P.O. Number:**
Engineer:	**Representative:**
Tag:	**Wholesale Distributor:**

DESCRIPTION

The Apollo® Model PR-LF (36LF Series) Pressure Reducing Valves are designed to protect residential and commercial water distribution systems by controlling excessive pressures. The valves are built for long reliable service with proven ASTM grade Lead Free* materials including a bronze body, cover and stainless steel strainer.



FEATURES

- Corrosion Resistant Bronze Body and Bonnet
- 100% Factory Tested, preset to 50 psi (-01)
- Integral SS Strainer
- Balanced Piston Design
- Internal Thermal Expansion By-pass
- High and Low Pressure Options
- Multiple Connection Options
- Optional Pressure Gauge or Tapping
- 100% Manufactured in USA

MATERIAL SPECIFICATIONS

Part Name	Material
Body	C89836 Lead Free* Bronze
Cover	Bronze, ASTM B584
Diaphragm	FDA Grade Buna W/ Polyester
Seat disc	FDA Grade EPDM
Stem	C27451 Lead Free* Brass
Spring	Stainless Steel
O-Rings	NSF Grade EPDM

APPROVALS / RATINGS

Maximum Supply Pressure up to 300 psig
Temperature Range 33 °F – 180 °F
Maximum Set Pressure: 125 psig
NSF 372 Lead Free* ANSI 3RD Party Certified

1003 B356 AB1953

***LEAD FREE**: The wetted surfaces of this product shall contain no more than 0.25% lead by weighted average. Complies with CA AB1953, VT Act 193, MD HB372, LA HB471 and Federal Public Law 111-380. ANSI 3rd party certified and listed.

MODEL NUMBER

PR- ☐- ☐- ☐ - ☐ - ☐ - ☐ - LF

UNION
☐ **Blank** – Single Union
☐ **T** – No Union
☐ **D** – Double Union

GAUGE
☐ **Blank** – No Gauge Port (Standard)
☐ **P** – Plugged Gauge Port
☐ **G** – W/ Pressure Gauge

PRESSURE RANGE
☐ **Blank** – 25–75 PSIG
☐ **L** – 10-35 PSIG
☐ **H** – 75-125 PSIG

MISCELLANEOUS OPTIONS
☐ **A** – Stainless Steel Trim

SIZE
☐ **–12** = 1/2" ☐ **– 114** = 1-1/4"
☐ **– 34** =3/4" ☐ **– 112** = 1-1/2"
☐ **- 1** = 1" ☐ **– 2** = 2"

END CONNECTION
☐ **BLANK –**FNPT x FNPT (No Union)

Single Union
☐ **S -** Solder x FNPT
☐ **C –** CPVC x FNPT
☐ **X –** PEX x FNPT
☐ **T** – FNPT x FNPT

Double Union
☐ **S** – Solder x Solder
☐ **C** – CPVC x CPVC
☐ **X** – PEX x PEX
☐ **B** – BSPT x BSPT
☐ **SC** – Solder x CPVC
☐ **SX** – Solder x PEX
☐ **CX** – CPVC x PEX

ORDER NUMBER MATRIX

✔36LF	-	1	0	5	0	1
		CONNECTION	***OPTION***	***SIZE***	***GAUGE***	***PRESSURE***
	✔	1- SINGLE UNION NPT	✔0 - NO OPTION	3 - 1/2"	✔0 - W/O GAUGE	✔1- 25-75 PSI RANGE
		2- NO UNION NPT	C- CPVC TAILPIECE	4 - 3/4"	P - WITH GAUGE PORT PLUG	2- 10-35 PSI RANGE
		3- SINGLE UNION SOLDER	S - SS TRIM	✔5 - 1"	G- WITH GAUGE	3- 75-125 PSI RANGE
		4- DOUBLE UNION NPT	X- PEX TAILPIECE	6 - 1-1/4"		
		5- DOUBLE UNION SOLDER		7 - 1-1/2"		
		6- SINGLE UNION METER x NPT		8 - 2"		
		8- DOUBLE UNION CPVC				
		9- DOUBLE UNION PEX				

Lead Free*

Model PR-LF

WATER PRESSURE REDUCING VALVE

(36LF Series)

FLOW AND SIZING INFORMATION

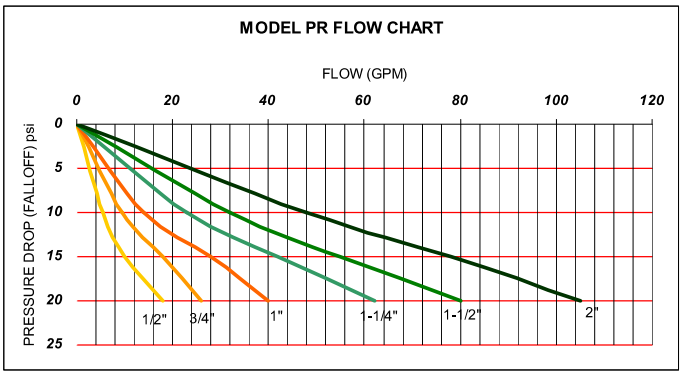

WATER CAPACITY (GPM)

PIPE SIZE	FALL-OFF	PRESSURE DIFFERENTIAL (PSI)		
	(PSI)	25	50	75
	5	1.7	2	2.3
1/2"	10	4.3	5	5.8
	15	8.5	10	11.5
	20	15.3	18	20.7
	5	3.4	4	4.6
3/4"	10	7.7	9	10.4
	15	14.5	17	19.6
	20	22.1	26	29.9
	5	5.1	6	6.9
1"	10	11.9	14	16.1
	15	22.1	26	29.9
	20	34	40	46
	5	8.5	10	11.5
1-1/4"	10	19.6	23	26.5
	15	35.7	42	48.3
	20	53	62	71
	5	12	14	16
1-1/2"	10	27	32	37
	15	48	56	64
	20	68	80	92
	5	15	18	21
2"	10	39	46	53
	15	66	78	90
	20	94	110	127

DIMENSIONAL INFORMATION

CONNECT	SIZE	DIMENSIONS (IN.)						WT. (Union)
TYPE	(in)	A	B	C	D	E	F	(lbs. EA)
THREAD	1/2"	4	4-7/8	5-5/8	5-7/8	5/8	2-3/4	3.5
SOLDER	1/2"	4	4-7/8	5-5/8	5-7/8	1/2	2-3/4	3.4
PEX	1/2"	4	5	5-3/4	5-7/8	5/8	2-3/4	3.3
CPVC	1/2"	4	4-5/8	5-1/4	5-7/8	1/2	2-3/4	3.1
THREAD	3/4"	3-7/8	4-7/8	5-5/8	5-7/8	5/8	2-3/4	3.4
SOLDER	3/4"	3-7/8	4-7/8	5-5/8	5-7/8	3/4	2-3/4	3.3
PEX	3/4"	3-7/8	5	5-3/4	5-7/8	5/8	2-3/4	3.2
CPVC	3/4"	3-7/8	4-7/8	5-5/8	5-7/8	5/8	2-3/4	3
THREAD	1"	4-3/8	5-1/2	6-3/8	6-7/8	5/8	3-3/8	4.5
SOLDER	1"	4-3/8	5-1/2	6-3/8	6-7/8	5/8	3-3/8	4.4
PEX	1"	4-3/8	5-1/2	6-5/8	6-7/8	7/8	3-3/8	4.3
CPVC	1"	4-3/8	5-3/4	7	6-7/8	3/4	3-3/8	4
THREAD	1-1/4"	5-3/8	6-1/2	7-1/2	8-7/8	7/8	4	10.2
SOLDER	1-1/4"	5-3/8	6-5/8	7-3/4	8-7/8	1	4	10.1
THREAD	1-1/2"	5-3/8	6-5/8	7-7/8	8-7/8	3/4	4	10.4
SOLDER	1-1/2"	5-3/8	6-3/4	8	8-7/8	1-1/8	4	10.3
THREAD	2"	7-1/8	8-1/2	9-7/8	11-1/2	1	5-3/4	22.5
SOLDER	2"	7-1/8	8-7/8	10-1/2	11-1/2	1-3/8	5-3/4	22.4

* Nominal dimensions are shown. Allowances must be made for manufacturers' tolerances.

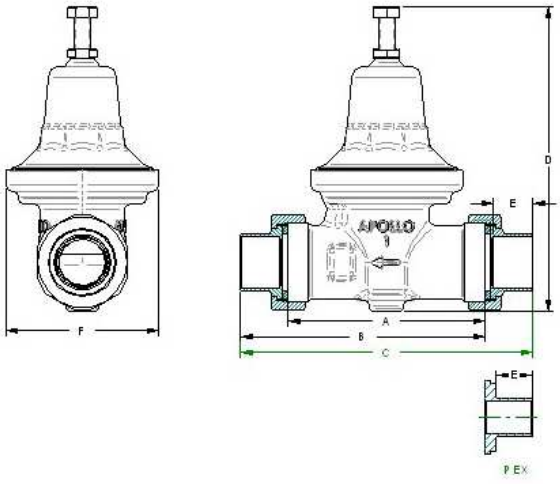

JUMP KITS

FOR USE DURING SYSTEM STARTUP AND OVERPRESSURIZATION

Kit Number	Size	Adapter
36C304JKF	¾"	Threaded
36C305JKF	1"	Threaded
36C304JKS	¾"	Solder
36C305JKS	1"	Solder
36C304JKC	¾"	CPVC
36C305JKC	1"	CPVC



Conbraco Industries can accept no responsibility for possible errors in this document and reserves the right to alter its product design or construction without notice and without incurring any obligation to make such changes on Conbraco products previously or subsequently sold. All product specifications are approximate and are provided for reference only.

INSTALLATION INSTRUCTIONS

'Apollo' Valves

THE APOLLO MODEL PR (PRESSURE REDUCING VALVE) IS TO BE INSTALLED IN THE WATER LINE WITH THE ARROW ON THE VALVE POINTING IN THE DIRECTION OF THE FLOW. THIS VALVE IS FACTORY SET AT 50 PSI. UNLESS OTHERWISE SPECIFIED BY CUSTOMER. THE PRIMARY PURPOSE OF A PRESSURE REDUCNG VALVE IS TO REDUCE THE WATER PRESSURE COMING IN FROM THE CITY MAIN DOWN TO A MORE FUNCTIONAL LINE PRESSURE IN THE HOME. IT WILL ENABLE THE HOUSEHOLD TO USE WATER AT A CONSTANT PRESSURE, WHATEVER THE DEMAND, EVEN TO A REMOTE OUTLET IN THE HOME. AT 100 PSIG WATER WILL HAVE MORE PUSH BEHIND IT THAN AT 50 POUNDS PRESSURE, SO LESS WATER WILL BE USED BY LOWERING THE PRESSURE. REDUCED PRESSURE WILL RESULT IN A SAVINGS TO THE USER ON THEIR WATER CONSUMPTION. THE MODEL PR COMES STANDARD WITH A THERMAL EXPANSION BY-PASS FEATURE WHICH DISSIPATES THE EXPANDED DOWNSTREAM PRESSURE BACK TO THE SERVICE MAIN. THE APOLLO WATER PRESSURE REDUCING VALVE HAS A UNIQUE CARTRIDGE ASSEMBLY FACILITATING EASY REMOVAL AND/OR REPLACEMENT USING ORDINARY HAND TOOLS.

WARNING! THIS PRODUCT CONTAINS CHEMICALS KNOWN TO THE STATE OF CALIFORNIA TO CAUSE CANCER AND BIRTH DEFECTS OR OTHER REPRODUCTIVE HARM. (CALIFORNIA LAW REQUIRES THAT THIS WARNING BE GIVEN TO THE CUSTOMERS IN THE STATE OF CALIFORNIA.). FOR MORE INFORMATION VISIT WWW.APOLLOVALVES.COM.

THIS PRODUCT MEETS THE REQUIREMENTS OF THE EPA SAFE DRINKING WATER ACT

REPAIR KITS FOR 36 SERIES PRESSURE REDUCING VALVES

APOLLO SERIES	SIZE	CARTRIDGE ASSEMBLY	DIAPHRAGM
36-103, 36-203, 36-303	1/2	W6462-06	D2419-00
36-104, 36-204,36-304	3/4	W6462-06	D2419-00
36-105, 36-205, 36-305	1	W6474-06	D4842-00
36-106, 36-206, 36-306	1 1/4	W6712-06	D2558-00
36-107, 36-207,36-307	1 1/2	W6712-06	D2558-00
36-108, 36-208, 36-308	2	W6714-06	D2559-00

SIDE A

MAINTENANCE INSTRUCTIONS

ALL STANDARD VALVES ARE FACTORY SET AT 50 PSI. IN ORDER TO RAISE OR LOWER THE PRESSURE SETTING, LOOSEN LOCK NUT AND TURN ADJUSTMENT SCREW CLOCKWISE TO RAISE PRESSURE OR COUNTERCLOCKWISE TO LOWER PRESURE, RETIGHTEN LOCK NUT.

TO REPLACE CARTRIDGE

1. SHUT OFF WATER SERVICE TO DWELLING AT MAIN.
2. OPEN A FAUCET TO RELIEVE PRESSURE, LEAVE OPEN.
3. BACK OFF LOCK NUT AND ADJUSTING SCREW.
4. LOOSEN BELL HOUSING, REMOVE SPRING, DISC, AND FRICTION WASHER.
5. REMOVE BOLT, PRESSURE PLATE, AND DIAPHRAGM.
6. REMOVE CARTRIDGE ASSEMBLY.
7. REMOVE SCREEN, CLEAN OFF ANY GRIT, EXAMINE BODY FOR DEBRIS AND FLUSH OUT.

TO RE-ASSEMBLE

1. SCREW IN NEW CARTRIDGE ASSEMBLY AND TIGHTEN.
2. REPLACE DIAPHRAGM, PRESSURE PLATE AND BOLT.
3. REPLACE SPRING, DISC, FRICTION WASHER, AND BELL HOUSING, TIGHTEN.
4. TURN IN ADJUSTING SCREW TO OLD SETTING, TIGHTEN LOCK NUT.
5. CHECK ALL FITTINGS AND TURN WATER BACK ON.
6. LET WATER RUN A FEW MOMENTS TO FLUSH THE SYSTEM OF AIR.
7. TO ADJUST PRESSURE ON REGULATOR TO DESIRED SETTING, TURN **CLOCKWISE** TO **RAISE** PRESSURE OR **COUNTERCLOCKWISE** TO **LOWER** PRESSURE.

CONBRACO INDUSTRIES, INC. PAGELAND,S.C. Made in U.S.A. I-4222-00

SIDE B