Installation, Maintenance, & Repair Series 719 and Series LF719

Double Check Valve Assembly

Sizes: ½" – 2" (15 – 50mm)

⚠ WARNING

Read this Manual BEFORE using this equipment.

Failure to read and follow all safety and use information can result in death, serious personal injury, property damage, or damage to the equipment.

Keep this Manual for future reference.

THINK SAFETY FIRST

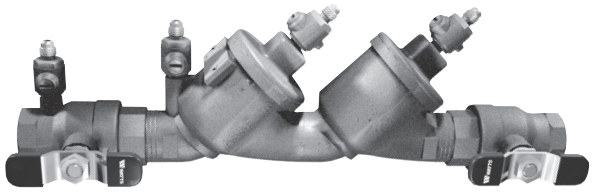

1" 719QT and LF719QT

Local building or plumbing codes may require modifications to the information provided. You are required to consult the local building and plumbing codes prior to installation. If this information is not consistent with local building or plumbing codes, the local codes should be followed.

Need for Periodic Inspection/Maintenance: This product must be tested periodically in compliance with local codes, but at least once per year or more as service conditions warrant. Corrosive water conditions, and/or unauthorized adjustments or repair could render the product ineffective for the service intended. Regular checking and cleaning of the product's internal components helps assure maximum life and proper product function.

NOTICE

For Australia and New Zealand: Pipeline strainers should be installed between the upstream shutoff valve and the inlet of the backflow preventer.

Watts product specifications in U.S. customary units and metric are approximate and are provided for reference only. For precise measurements, please contact Watts Technical Service. Watts reserves the right to change or modify product design, construction, specifications, or materials without prior notice and without incurring any obligation to make such changes and modifications on Watts products previously or subsequently sold.

Testing

For field testing procedure, refer to Watts installation sheets IS-TK-DP/DL, IS-TK-9A, IS-TK-99E and IS-TK-99D found on **www.watts.com.**

For other repair kits and service parts, refer to our Backflow Prevention Products Repair Kits & Service Parts price list PL-RP-BPD found on **www.watts.com.**

For technical assistance, contact your local Watts representative.

WATTS GOLDEN EAGLE®

WATTS®

Installation Instructions

Series 719 and LF719 Double Check Valve Assemblies

Indoors - Figure 1

Check local codes for installation requirements. Pipe lines should be thoroughly flushed to remove foreign material before installing the unit. A strainer should be installed as shown, ahead of backflow preventer to prevent disc from unnecessary fouling. Install valve in the line with arrow on valve body pointing in the direction of flow.
For indoor installations, it is important that the valve be easily accessible to facilitate testing and servicing. Do not install in a concealed location.

⚠ CAUTION

Do not install with strainer when backflow preventer is used on seldom-used water lines which are called upon during emergencies, such as fire sprinkler lines, etc.
It is important that Series 719 and LF719 be tested periodically in compliance with local codes but at least once a year or more often depending upon system conditions. Regular inspection, testing and cleaning assures maximum life and proper product function.

NOTICE

Fire Protection System Installations
The National Fire Protection Agency (NFPA) Guidelines require a confirming flow test to be conducted whenever a "main line" valve such as the shutoff valves or a backflow assembly have been operated. Certified testers of backflow assemblies must conduct this test. The trim valves of the confirming flow test must be closed during the test. When the test is completed, the trim valves must be returned to a fully open position.

Figure 1

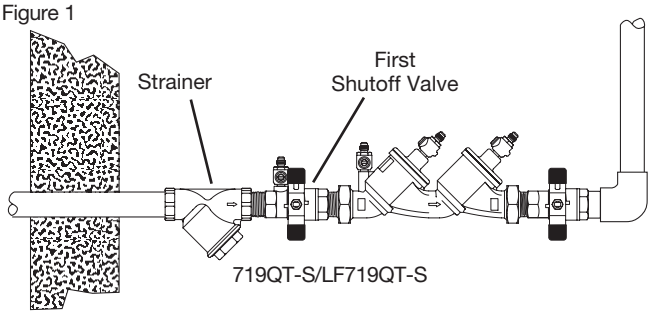

719QT-S/LF719QT-S

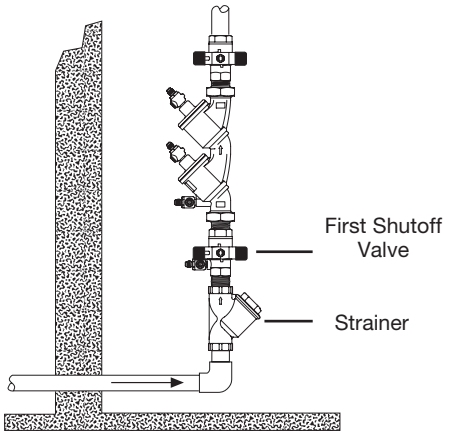

719QT-S/LF719QT-S Vertical flow-up installation

Outside - Figure 2

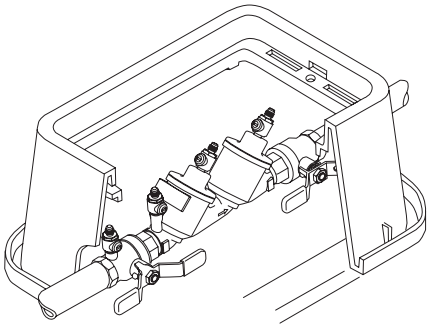

Meter Box Installation

Figure 2

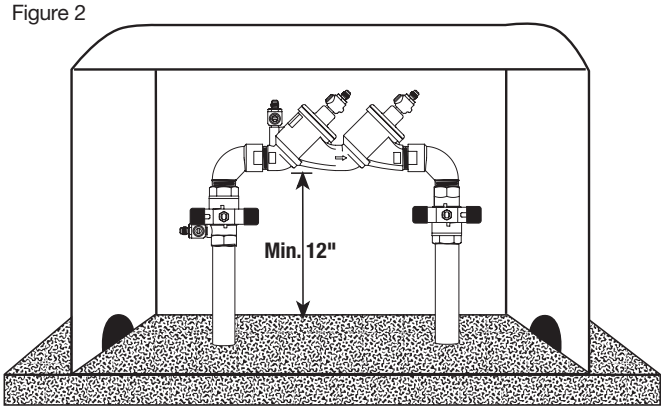

Fiberglass WattsBox

Now Available, WattsBox Insulated Enclosures.
For more information, send for ES-WB or ES-WB-T.

Parallel - Figure 3

Where approved by code, Watts recommends a custom engineered Watts PVS Series water supply valve station consisting of two or more 719 and LF719 Series valves piped in parallel to serve a larger supply main. This type of installation is employed whenever it is required to maintain water flow to a facility. Typical applications include hospitals, multi-family dwellings, malls and other similar applications.
A properly designed Watts PVS valve station provides redundant flow paths, a continuous supply of adequate water, testing and servicing of an individual valve without supply interruption, and long service life.
The size, quantities and design of parallel valve installations should be exactly in accordance with the engineer's judgment and the published Best Practice Guide of Watts wherever possible. For a copy of the Watts Best Practice Guide, call Watts at 1-800-617-3274.

Figure 3

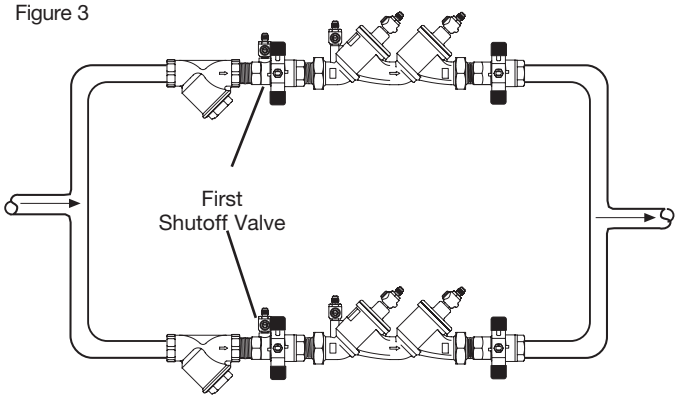

719QT-S/LF719QT-S

Service, Replacement Parts and Maintenance

Series 719 and LF719 Double Check Valve Assemblies

Servicing the First and Second Check Valves

NOTICE

Before servicing, be certain water is turned off or shutoff valves are closed

1. Close shutoff valves up and downstream of the valve.
2. Using an appropriate sized wrench, loosen the check valve cover. Unscrew the check valve cover and lift off.
3. Remove spring.
4. Lift out disc holder assembly from body of valve.
5. To reverse the seat disc, unscrew disc screw and disassemble disc washer and disc rubber from disc holder assembly. Reverse rubber so opposite face is showing. Assemble disc screw through disc washer and rubber and screw into disc holder.
6. To replace seat module, pull out of body by gripping at reinforcement ring. Replace seat module with new component by placing into body seat bore. Tightening cover will engage seat properly.
7. Insert disc holder assembly back into seat module.
8. Replace spring insuring that it seats properly on disc holder.
9. Place cover onto spring with internal guide on cover positioned inside end coil.
10. Screw cover onto valve body.
11. Tighten cover wrench tight.
10. Open shutoff valves.

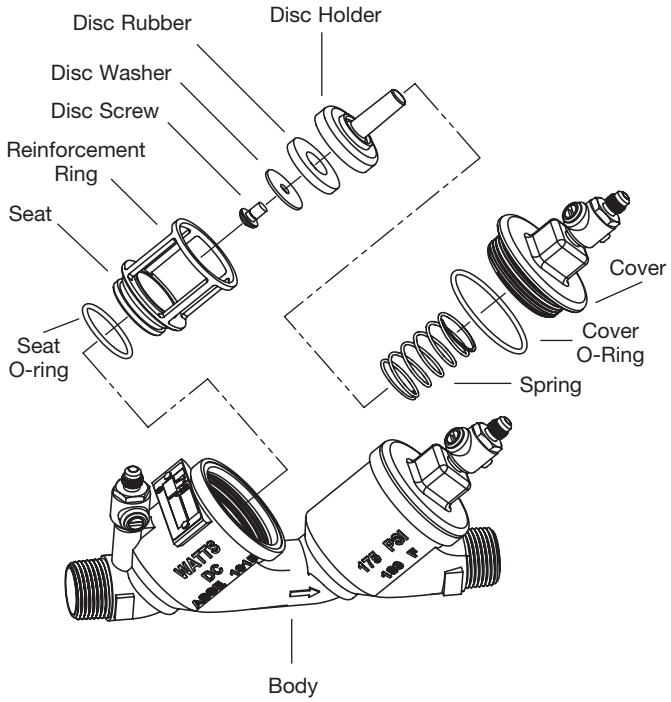

For repair kits and parts, refer to our Backflow Prevention Products Repair Kits & Service Parts price list PL-RP-BPD found on **www.watts.com.**

Troubleshooting Guide

Series 719 and LF719

Symptom	Cause	Solution
1. Check valve fails to hold 1.0 PSID minimum	a. Debris on check disc sealing surface	Disassemble and clean
	b. Leaking gate valve	Disassemble and clean or repair
	c. Damaged seat disc or seat o-ring	Disassemble and replace
	d. Damaged guide holding check open	Disassemble and clean or replace
	e. Weak or broken spring	Disassemble and replace spring
2. Chatter during flow conditions	a. Worn, damaged or defective guide	Disassemble and repair or replace guide
3. Low flows passing through mainline valve	a. Mainline check fouled	Disassemble and clean
	b. Meter strainer plugged	Disassemble and clean
	c. Damaged mainline seat disc or seat	Disassemble and replace
	d. Broken mainline spring	Disassemble and replace

WARNING: This product contains chemicals known to the State of California to cause cancer and birth defects or other reproductive harm.
For more information: www.watts.com/prop65

Limited Warranty: Watts Regulator Co. (the "Company") warrants each product to be free from defects in material and workmanship under normal usage for a period of one year from the date of original shipment. In the event of such defects within the warranty period, the Company will, at its option, replace or recondition the product without charge.
THE WARRANTY SET FORTH HEREIN IS GIVEN EXPRESSLY AND IS THE ONLY WARRANTY GIVEN BY THE COMPANY WITH RESPECT TO THE PRODUCT. THE COMPANY MAKES NO OTHER WARRANTIES, EXPRESS OR IMPLIED. THE COMPANY HEREBY SPECIFICALLY DISCLAIMS ALL OTHER WARRANTIES, EXPRESS OR IMPLIED, INCLUDING BUT NOT LIMITED TO THE IMPLIED WARRANTIES OF MERCHANTABILITY AND FITNESS FOR A PARTICULAR PURPOSE.
The remedy described in the first paragraph of this warranty shall constitute the sole and exclusive remedy for breach of warranty, and the Company shall not be responsible for any incidental, special or consequential damages, including without limitation, lost profits or the cost of repairing or replacing other property which is damaged if this product does not work properly, other costs resulting from labor charges, delays, vandalism, negligence, fouling caused by foreign material, damage from adverse water conditions, chemical, or any other circumstances over which the Company has no control. This warranty shall be invalidated by any abuse, misuse, misapplication, improper installation or improper maintenance or alteration of the product.
Some States do not allow limitations on how long an implied warranty lasts, and some States do not allow the exclusion or limitation of incidental or consequential damages. Therefore the above limitations may not apply to you. This Limited Warranty gives you specific legal rights, and you may have other rights that vary from State to State. You should consult applicable state laws to determine your rights. **SO FAR AS IS CONSISTENT WITH APPLICABLE STATE LAW, ANY IMPLIED WARRANTIES THAT MAY NOT BE DISCLAIMED, INCLUDING THE IMPLIED WARRANTIES OF MERCHANTABILITY AND FITNESS FOR A PARTICULAR PURPOSE, ARE LIMITED IN DURATION TO ONE YEAR FROM THE DATE OF ORIGINAL SHIPMENT.**

WATTS®

ISO 9001-2008 CERTIFIED

A Watts Water Technologies Company

USA: Tel: (978) 688-1811 • Fax: (978) 794-1848 • www.watts.com
Canada: Tel: (905) 332-4090 • Fax: (905) 332-7068 • www.watts.ca

© 2013 Watts