Model T-3200/T-3201

Log Lighter Valve

LEGEND VALVE

NO.	PART	MATERIAL
1	BODY	FORGED BRASS
2	STEM	FORGED BRASS
3	WASHER	SYNTHETIC FIBER
4	O-RING	VITON
5	ESCUTCHEON	FORGED BRASS OR CHROME
6	KEY	ZINC

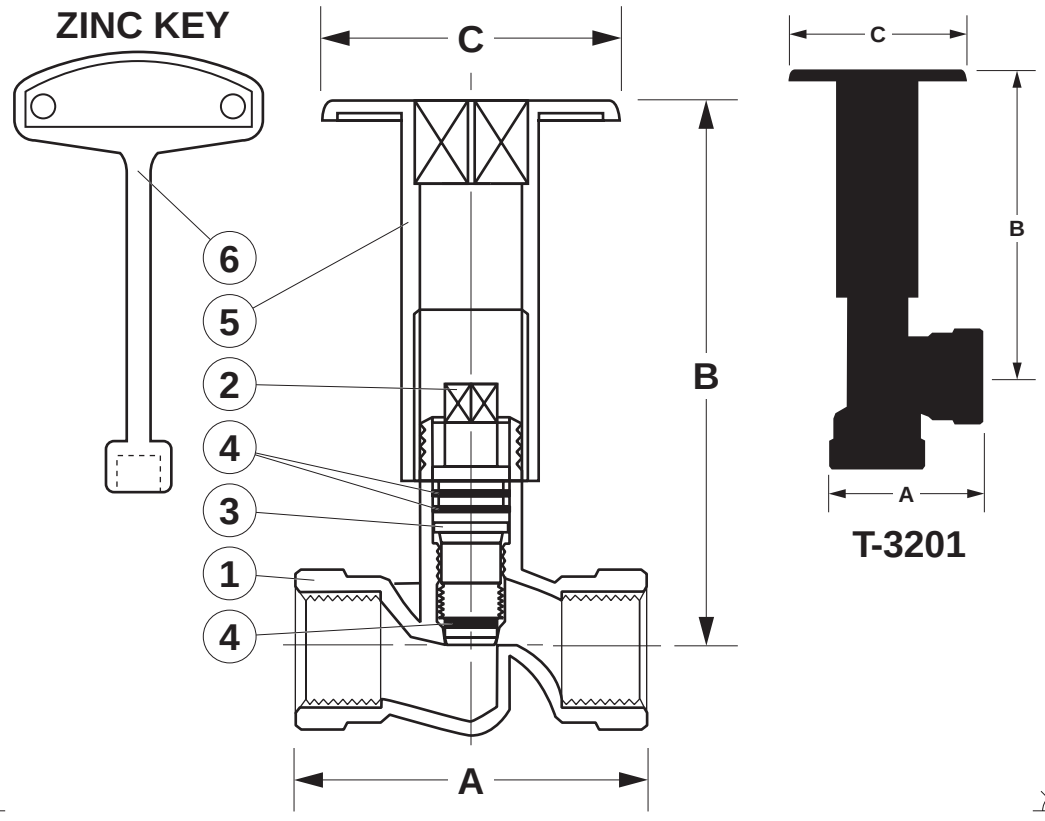

SIZE	T-3200	T-3201				
A	2.60	1.51				
B	4.00	3.77				
C	2.17	2.17				

- NOTES:
- 1/2 LB. PSI (AGA/CGA CERTIFIED)
- FACTORY TESTED AT 100 PSI

- B.T.U. CAPACITY:

	(1 IN. WG PRESSURE)	(.3 IN. WG PRESSURE)
T-3200:	118,000 BTU/HR	65,000 BTU/HR
T-3201:	182,000 BTU/HR	100,000 BTU/HR

- CAN BE USED FOR NATURAL & LP GAS ONLY

C US