# Technical Instructions

## Installation ■

**NOTE:** Installation should be in accordance with accepted plumbing practices. Flush all piping thoroughly before installation.

1. Position mixer $1^{15}/_{16}$" ± $^1/_2$" [49mm ± 13mm] from inlet center to finished wall surface. The tub outlet port is marked "TUB" and should face down. Facing front of mixer, connect hot water to left side and connect cold water to right side. The valve has "C" and "H" cast into the body near the appropriate inlet ports.
2. For standard inlets: Valve is factory-set for standard inlets ("TOP" stamped on stem should face shower outlet "S", see Figure 3.) If reversed inlets are required due to back-to-back installation (Cold water supply on the left and Hot water supply on the right), see Figure 3 and follow instructions a–d below:
   a. Connect cold inlet to hot port ("H") and hot inlet to cold port ("C"). **NOTE:** Do not turn valve upside down. If valve is upside down, water will not flow properly through tub spout or showerhead.
   b. Turn water off with checkstops, remove high temp. limit stop and bonnet.
   c. Rotate stem 180°, and reinstall bonnet and high temp. limit stop.

**NOTE:** Be certain the word "TOP" stamped on stem is facing toward tub outlet "T".

   d. Hot and Cold inlets should be re-identified for reversed inlets to avoid confusion during future maintenance.
3. For tub and shower installations, see Figure 1. Pipe bottom outlet port "T" directly to the diverter tub spout. The Biltmore mixer body is designed to operate without the use of a twin ell. Pipe top outlet port "S" to the showerhead.

   Be certain that the bottom outlet port "TUB" is piped to the tub spout; if outlet connections are reversed, the mixer will not function properly.
4. For shower only installation, see Figure 2. Pipe top outlet port "S" directly to the showerhead and plug bottom port.
5. Rough-in guide installation…
   a. When piping installation is completed and before doing the finished wall, slide rough-in guide onto the mixer stem and press fit into place. (See Figure 5.)
   b. The rough-in guide will insure the proper size opening for mixer and checkstop shutoff and repair accessibility, as well as protect the chrome plated sleeve from damage during drywall and tile installation.
6. To install dial gaskets, peel backing off gaskets and attach gaskets to inside of dial plate.
7. After wall is completed, remove rough-in guide and attach dial assembly and handle to mixer body with the screws furnished. See Figure 4.

**CAUTION:** When soldering during installation process, do not heat the valve any higher than the temperature required to flow solder. Excessive overheating of the valve may cause damage to the balancing cartridge mechanism. **By following this recommendation, you will be able to solder the valve without removing either the cartridge or the checkstop internals.** If either brazing or resistance (electric) solder is to be used, all valve internals must be removed.

8. Maximum temperature setting must be set at the job site. High temperature limit stop is located on the bonnet. Remove O-ring and discard. Slide the retainer and the high temperature limit stop out. Rotate stem to desired maximum temperature, but no greater than 115°F (46°C). Slide back the maximum temperature limit stop touching the tab on the stem. Slide the retainer back all the way to secure the high temperature limit stop. Install handle.

The maximum temperature setting must be re-adjusted if the hot water supply temperature is changed, and also **seasonally to compensate for changes in the cold water supply temperature.**

**Figure 1: Rough-in Dimensions – Tub and Shower**

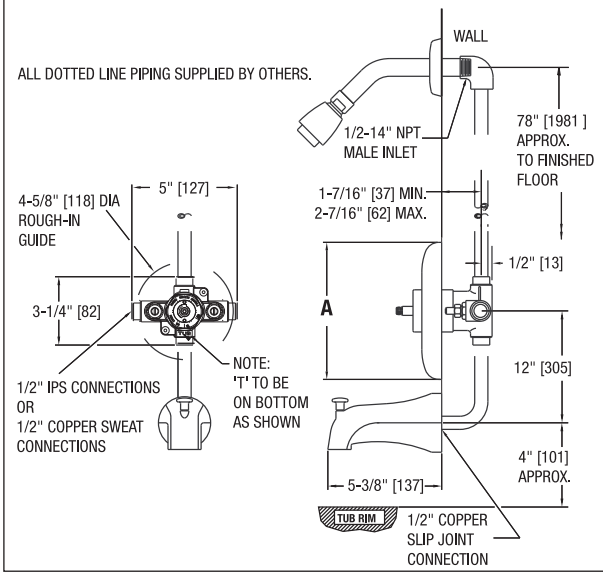


*Dimensions in inches [millimeters]*

**Figure 2: Rough-in Dimensions – Shower only**

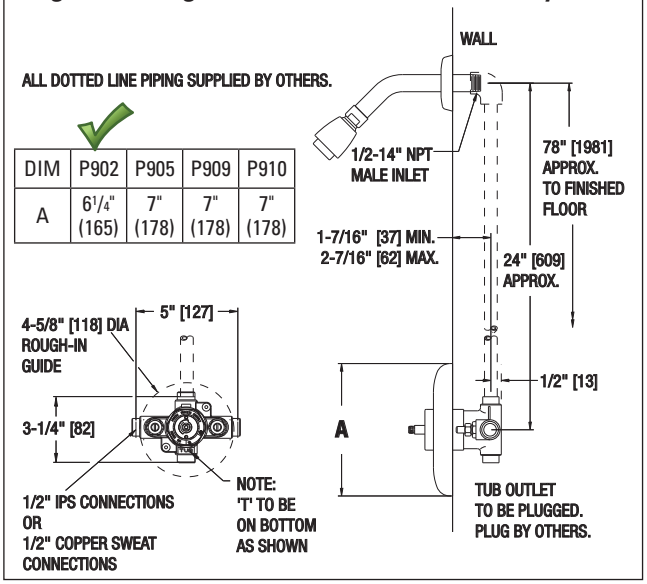

**Figure 3: Stem Position Information**

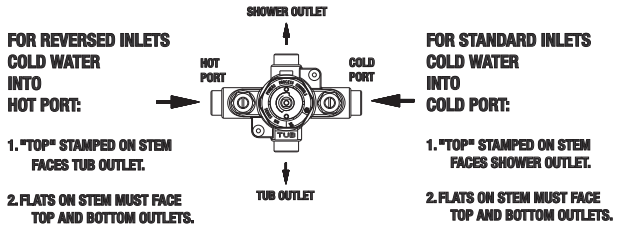


**Figure 4**

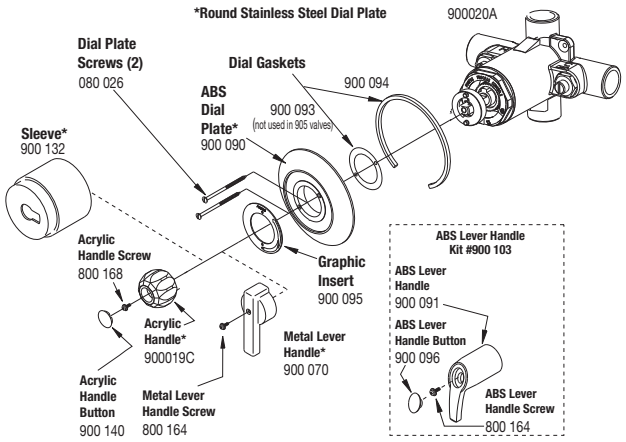


** Use Sleeve 900 132 in Kit 900 268 with ABS Dial.*
*Use Sleeve 800015H in Kit 900 269 with Round Stainless Dial.*

**NOTE:** For valves sold without checkstops, it is recommended that the valve be installed where there is shutoff upstream of the valve, so that the valve may be easily serviced and accessed. If this is not possible, the valve should include a shutoff or combination checkstop/shutoff on the inlets.

**Figure 5**

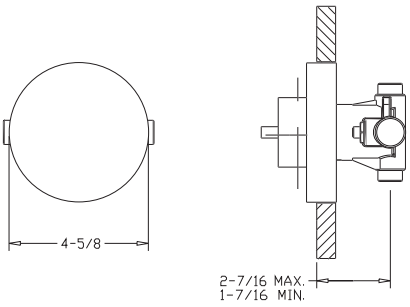


**Figure 6: Max. Temperature Setting/Handle Rotation Stop**

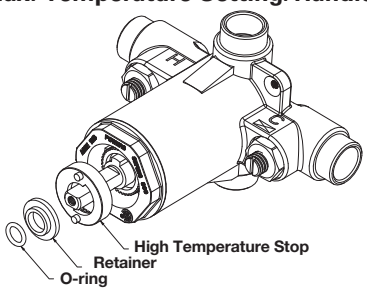


**REPAIR KITS: For further information on repair and maintenance, see TI900.**

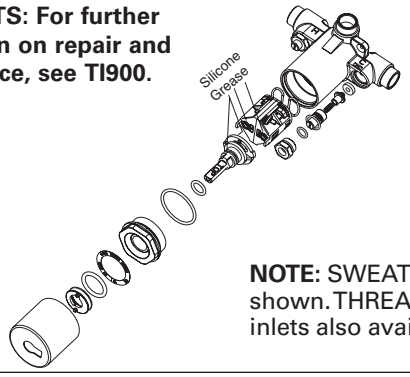


**NOTE:** SWEAT inlets shown. THREADED inlets also available.

**CALIFORNIA PROPOSITION 65 WARNING**

**WARNING:** This product contains chemicals known to the State of California to cause cancer and birth defects or other reproductive harm. (California law requires this warning to be given to customers in the State of California.)

**For more information: www.watts.com/prop65**

## Troubleshooting ■

| DESCRIPTION | TROUBLESHOOTING | REPAIR KIT NO. |
|---|---|---|
| GASKET AND DISC REPLACEMENT | 1) Water leaks at valve stem and/or bonnet.<br>2) Water leaks at valve shutoff.<br>3) Water leaks at checkstop. | 900 030 Models 1 and 2<br><br>900 028 Model 3 |
| INTERNALS REPLACEMENT | 1) With mixer handle in MID postition, HW flows with CW. checkstop closed or CW flows with HW checkstop closed. | 900031A, Model 1<br>900 031 Model 2<br>900 032 Model 3 |
| CHECKSTOP REPLACEMENT | 1) Checkstop will not completely shut off. | 900 049 Models 1 and 2<br>900 050 Model 3 |

## Warranty ■

The Seller warrants that the equipment manufactured by it and covered by this order or contract is free from defects in material and workmanship and, without charge, equipment found to be defective in material or workmanship will be repaired, or at Seller's option replaced F.O.B. original point of shipment, if written notice of failure is received by Seller within one (1) year after date of shipment (unless specifically noted elsewhere), provided said equipment has been properly installed, operated in accordance with the Seller's instructions, and provided such defects are not due to abuse or decomposition by chemical or galvanic action. THIS EXPRESS WARRANTY IS IN LIEU OF AND EXCLUDES ALL OTHER WARRANTIES, GUARANTEES, OR REPRESENTATIONS, EXPRESS OF IMPLIED. THERE ARE NO IMPLIED WARRANTIES OF MERCHANTABILITY OR OF FITNESS FOR A PARTICULAR PURPOSE. The Seller assumes no responsibility for repairs made on the Seller's equipment unless done by the Seller's authorized personnel, or by written authority from the Seller. The Seller makes no guarantee with respect to material not manufactured by it.

POWERS™
*A Watts Water Technologies Company*

ISO 9001-2008 CERTIFIED

**USA:** Phone: 1.800.669.5430 • Fax 1.847.229.0526 • www.powerscontrols.com
**Canada:** Phone: 1.888.208.8927 • Fax 1.888.479.2887 • www.powerscontrols.ca

 © 2010 Powers