PROSELECT™

Product Specifications

ASSEMBLED CAST IRON 3 PIECE STANDARD SCREW TYPE VALVE BOXES

Product Features

All valve boxes and related parts shall be coated on all surfaces with an asphaltic varnish of 2mm in thickness.

Alt Code	Description	Range	Length Top	Length Bottom
PSVBC	3 PIECE VALVE BOX "C" BOX W/ WATER LID	45-54	16	30

PSVBC box comes with a water lid part number IVBLIDW.
Can be used with valve box base - IVB6BSE or IVB160BSE.

LID

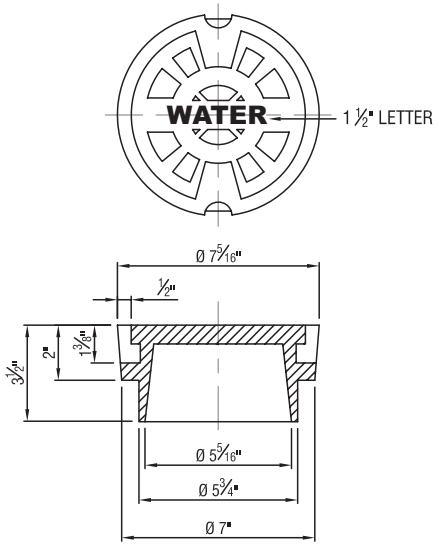

TOP

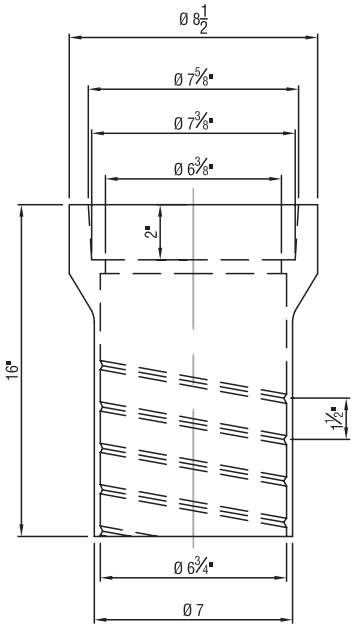

BOTTOM

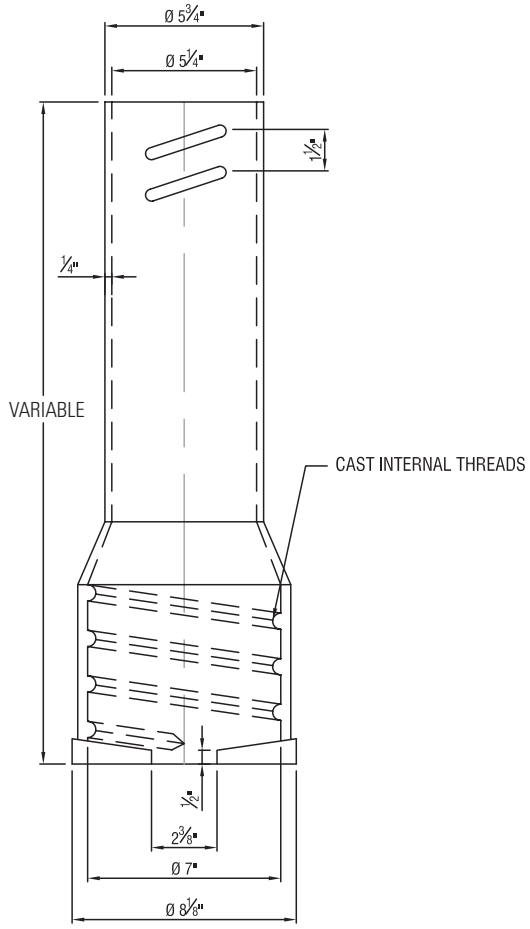

Codes & Approvals

Valve boxes conform to ASTM A-48, Grade 30B; Asphaltic varnish conforms to AWWA C-104.

©2017 Ferguson Enterprises, Inc. All Rights Reserved 0517 478259