NOTES:

1. FIT / FORM / FUNCTION SHALL FOLLOW PS-E.008.

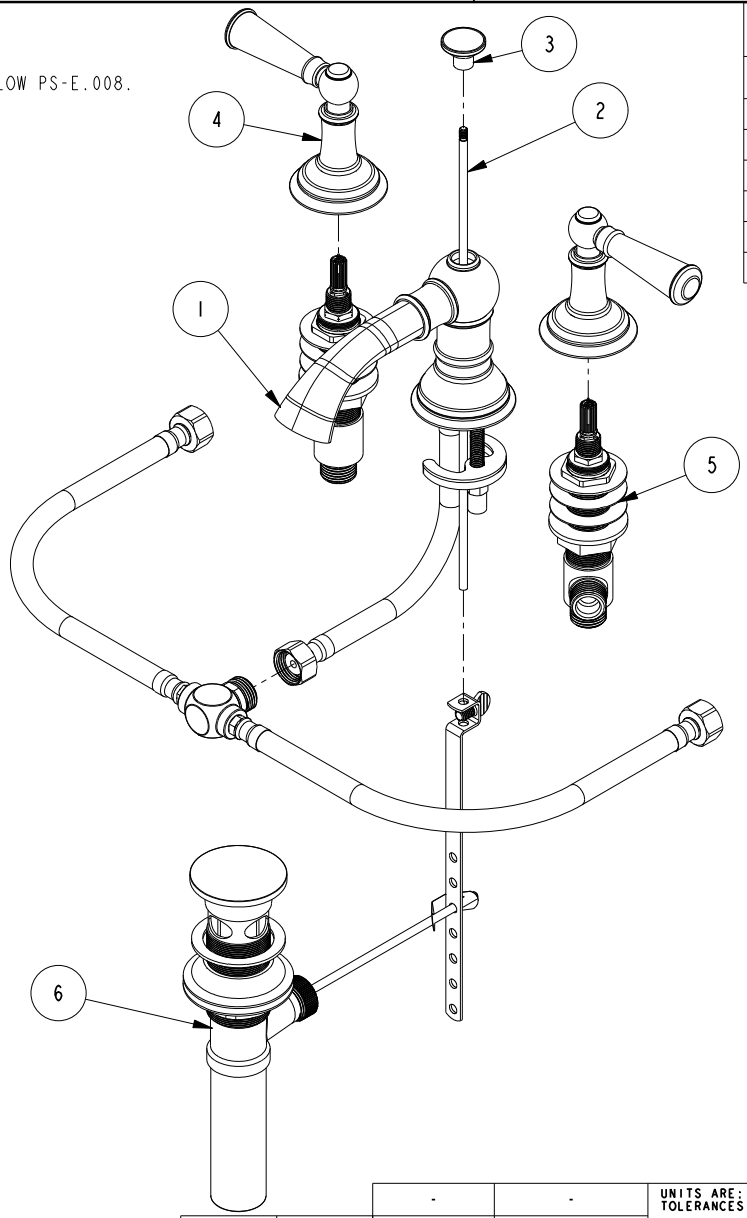

BILL OF MATERIAL (CURRENT LEVEL)

ITEM	PT/ASSY	DESCRIPTION	TYPE	QTY.
1	2-768	W/S SPOUT ASM	ASSEMBLY	1
2	10288	3/16" POP UP ROD	PART	1
3	11583	POP-UP KNOB	PART	1
4	3-373	LEVER HANDLE AND ESC. ASM	ASSEMBLY	2
5	1-525_2400	W/S VALVE ASM	ASSEMBLY	1
6	325	POP UP ASSEMBLY	ASSEMBLY	1

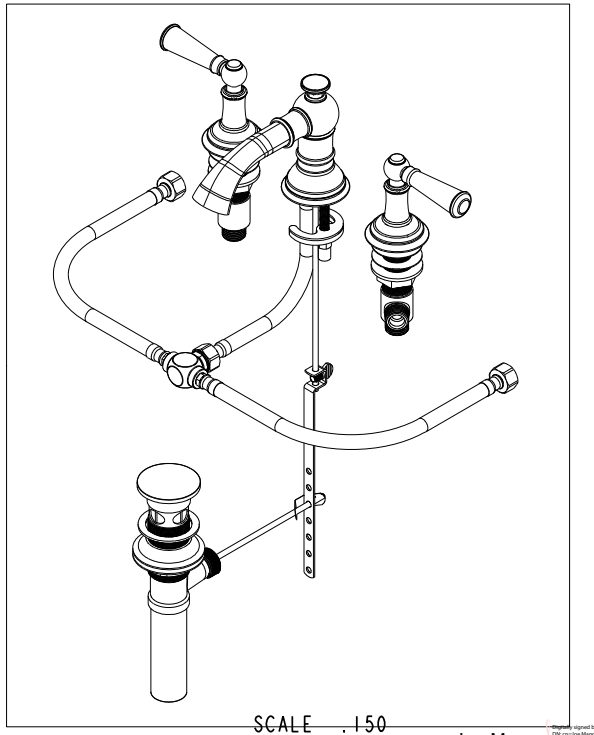

SCALE .150

Joe Manga

Digitally signed by Joe Manga
DN: cn=Joe Manga, o, ou=Brasstech Inc., email=jmanga@brasstech.com, c=US
Date: 2018.12.10 09:46:50 -08'00'

ZONE	REV	DESCRIPTION	DATE	APPROVED
-	D	EN-3764	12/07/18	J.M.
-	C	EN-2120	04/05/12	-
-	B	EN-1844	09/01/11	-
-	A	EN-1616	09/13/10	-
-	-	EN-1266	05/05/10	-

COPYRIGHT 2005 BRASSTECH, INC. THESE DRAWINGS AND THE DESIGNS DEPICTED HEREIN ARE THE PROPRIETARY PROPERTY OF BRASSTECH. ANY USE OR REPRODUCTION IS SUBJECT TO THE EXPRESS APPROVAL OF BRASSTECH. UNAUTHORIZED USE IS STRICTLY PROHIBITED. ALL RIGHTS RESERVED.

TESTING	-	-	-
ASSEMBLY	-	-	-
PLATING	-	-	-
POLISHING	-	NEXT ASSY	USED ON
MACHINING	-	APPLICATION	
TOOLING FIXTURE #		REMOVE ALL BURRS AND SHARP EDGES	

UNITS ARE: INCHES [MM]
TOLERANCES ARE:
FRACTIONS ±1/16" DECIMALS .X ±.1 [2,5] .XX ±.06 [1,5] ANGLES ±1°
(X.XXX) DENOTES CRITICAL DIMS.
ALL THREADS ARE CRITICAL

DRAWN	ANDY NGUYEN	04/05/12
CHECKED	-	05/05/10
APPROVED	-	05/05/10

BRASSTECH INCORPORATED
2001 CARNEGIE AVE.
SANTA ANA, CA 92705
(949) 417-5207

W/S LAVATORY FAUCET

DWG NO. 2430 REV D

SCALE .230 REF. - SHEET 1 OF 2

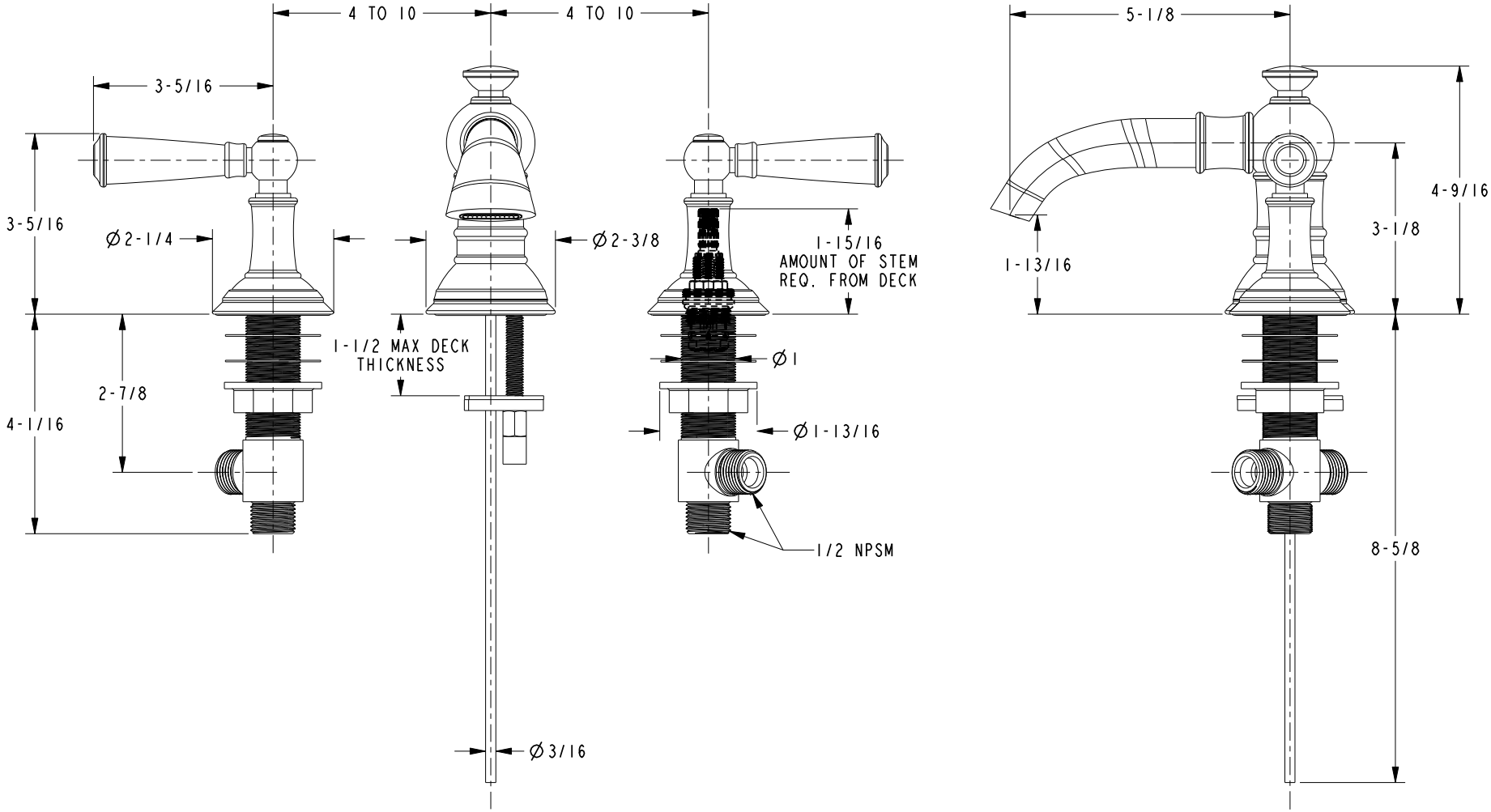

BRASSTECH INCORPORATED
2001 E. CARNEGIE AVE.
SANTA ANA, CA 92705
(949) 417-5207

DWG NO.	REV
2430	D

SCALE	REF.	SHEET
.350	-	2 OF 2