AquaVantage® AV™ Aquaflush® Bedpan Washer Series

Installation, Operation, Maintenance and Parts Manual

Patented and Patents Pending



Z6000AV-BWN



Z6011AV-BWN



Z6000-DVN



Z6011-DVN

AquaVantage/Aquaflush Bedpan Washer Systems

Z6000-DVN	Z6010AV-BWN	ZH6000AV-BWN
Z6010-DVN	Z6011AV-BWN	ZR6000AV-BWN
Z6011-DVN	Z6020AV-BWN	ZER6000AV-BWN
Z6000AV-BWN	Z6040AV-BWN	ZEMS6000AV-IS-BWN

LIMITED WARRANTY

All goods sold hereunder are warranted to be free from defects in material and factory workmanship for a period of three years from the date of purchase. Decorative finishes warranted for one year. We will replace at no costs goods that prove defective provided we are notified in writing of such defect and the goods are returned to us prepaid at Sanford, NC, with evidence that they have been properly maintained and used in accordance with instructions. We shall not be responsible for any labor charges or any loss, injury or damages whatsoever, including incidental or consequential damages. The sole and exclusive remedy shall be limited to the replacement of the defective goods. Before installation and use, the purchaser shall determine the suitability of the product for his intended use and the purchaser assumes all risk and liability whatever in connection therewith. Where permitted by law, the implied warranty of merchantability is expressly excluded. If the products sold hereunder are "consumer products," the implied warranty of merchantability is limited to a period of three years and shall be limited solely to the replacement of the defective goods. All weights stated in our catalogs and lists are approximate and are not guaranteed.

⚠ **WARNING: Cancer and Reproductive Harm - www.P65Warnings.ca.gov**
⚠ **ADVERTENCIA: Cáncer y daño reproductivo - www.P65Warnings.ca.gov**
⚠ **AVERTISSEMENT: Cancer et effets néfastes sur la reproduction - www.P65Warnings.ca.gov**

NOTE: The information in this manual is subject to change at any time without notice. Installations may be performed at different times of construction by different individuals. For this reason, these instructions should be left on-site with the facility or maintenance manager.

NOTE: READ ENTIRE MANUAL PRIOR TO INSTALLING PRODUCT.

PRODUCT SPECIFICATIONS: ZURN Bedpan Washer Only for Water Closets - The Bedpan Washer Assembly is furnished complete with bedpan washer, wall bracket and support bracket, high pressure vacuum breaker, vacuum breaker tube nut, 1-1/2”[38] flush tubes, fixture spud escutcheon, and fixture spud securing nut. **NOTE: FOR SPECIFICATIONS, FLOWS, OPTIONS, AND INSTALLATION INSTRUCTIONS ON VALVES REFER TO SPECIFIC INSTALLATION MANUALS.**

MODELS:

BEDPAN WASHERS ONLY

Z6000-DVN - Exposed bedpan washer for water closets.

Z6010-DVN - Exposed bedpan washer for water closets low rough-in water supply.(Retrofit)

Z6011-DVN - Exposed bedpan washer for water closets with handicap grap bar applications.

OPTIONS:

___-YH One Wall Bumper

___-YJ Split Ring Pipe Support

___-YK Solid Ring Pipe Support

___ Other

EXPOSED FLUSH VALVES WITH BEDPAN WASHER

Z6000AV-BWN - Exposed Z6000AV Model with bedpan washer for water closets.

Z6010AV-BWN - Exposed Z6010AV Model with bedpan washer for water closets with low rough-in water supply.(Retrofit)

Z6011AV-BWN - Exposed Z6011AV Model with bedpan washer for water closets with handicap grap bar applications.

Z6040AV-BWN - Exposed Z6040AV Model with bedpan washer with foot pedal actuation for water closets.

Note: See FV211 for specifications, flows, options, and installation instructions for flushometer.

CONCEALED FLUSH VALVES WITH BEDPAN WASHER

Z6020AV-BWN - Concealed Z6020AV Model with bedpan washer for water closet.

Note: See FV212 for specifications, flows, options, and installation instructions for flushometer.

HYDRAULIC FLUSH VALVES WITH BEDPAN WASHER

ZH6000AV-BWN - Exposed ZH6000AV Model with hydraulic actuator and bedpan washer for water closet.

ZH6011AV-BWN - Exposed ZH6011AV Model with bedpan washer for water closets with handicap grap bar applications.

Note: See FV241 for specifications, flows, options, and installation instructions for flushometer.

BATTERY POWERED FLUSH VALVES WITH BEDPAN WASHER

ZR6000AV-BWN - Exposed ZR6000AV Model battery powered sensor operated with bedpan washer for water closets.

ZER6000AV-BWN - Exposed ZER6000AV Model battery powered sensor operated with bedpan washer for water closets.

ZER6011AV-BWN - Exposed ZER6011AV Model with bedpan washer for water closets with handicap grap bar applications.

Note: See FV62 and FV2001 for specifications, flows, options, and installation instructions for flushometer.

HARDWIRED FLUSH VALVES WITH BEDPAN WASHER

ZEMS6000AV-IS-BWN - Exposed ZEMS6000AV-IS Model hardwired sensor operated with bedpan washer for water closet.

ZEMS6011AV-IS-BWN - Exposed ZEMS6011AV-IS Model with bedpan washer for water closets with handicap grap bar applications.

Note: See FV38 for specifications, flows, options, and installation instructions for flushometer.

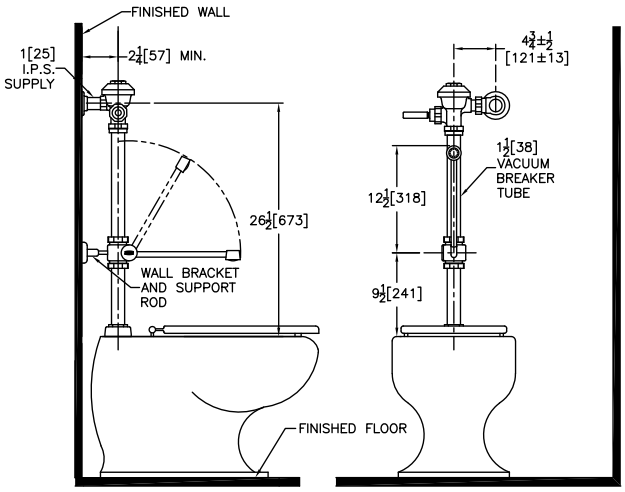

Z6000AV-BWN

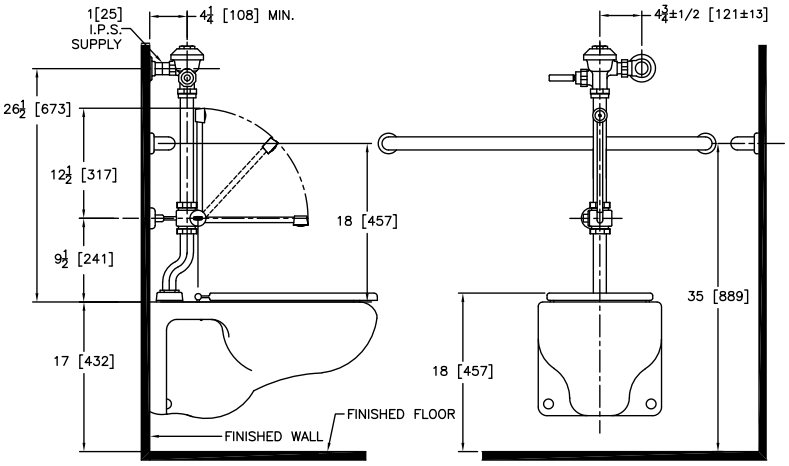

Z6011AV-BWN

Bedpan Washer Installation Instructions

Important:

- All plumbing is to be installed according to state and local codes and regulations.
- Water supply lines need to allow proper water flow for each fixture.
- Flush all lines of any debris before making connections.
- Do not use pipe sealant or plumbing grease on any fitting other then the control stop inlet.

The AquaVantage valve is designed to operate under several varieties of water pressure. The presssures fall between 10 and 100 psi (69 to 689 kPa). Each valve is tested at the lowest and highest pressures before being shipped. The minimum pressure is determined by the type of fixture purchased and the gallons per flush requested. Consult your catalog for flow options. Most low consumption valves (1.6 gallon) require a minimum of 25 psi flow pressure. When installing your quality Zurn valve it is recommended that to protect the polished finish you do not use a toothed wrench. This will cause gouges and scratches on your valve.

STEP NO. 1 - INSTALL SWEAT ADAPTOR AND CONTROL STOP

For detail instruction on installing the sweat adapter and control stop refer to specific valve installation manuals in this catalogue.

STEP NO. 2 - INSTALL OUTLET TUBE (FIGURE 2)

Slide the diverter sleeve spacer, diverter friction washer, diverter valve coupling nut, spud nut, spud friction washer, spud sleeve, and spud escutcheon over the diverter outlet tube. Insert outlet tube into fixture spud. Hand tighten spud nut onto fixture spud.

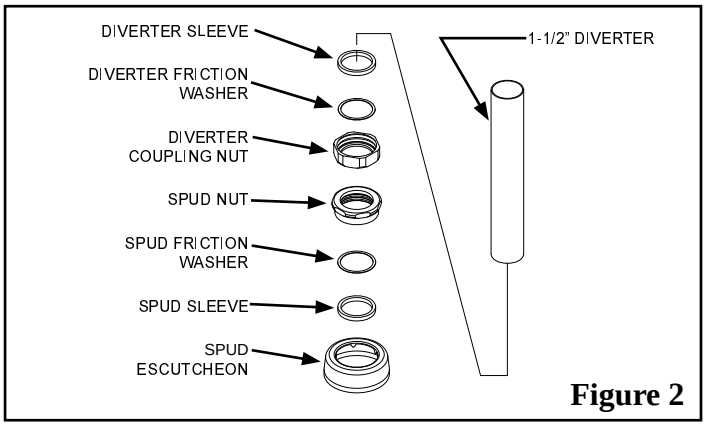

Figure 2

STEP NO. 3 - INSTALL DIVERTER VALVE (Figure 3)
Insert top of diverter tube into diverter valve and secure diverter coupling nut. Hand tighten diverter coupling nut.

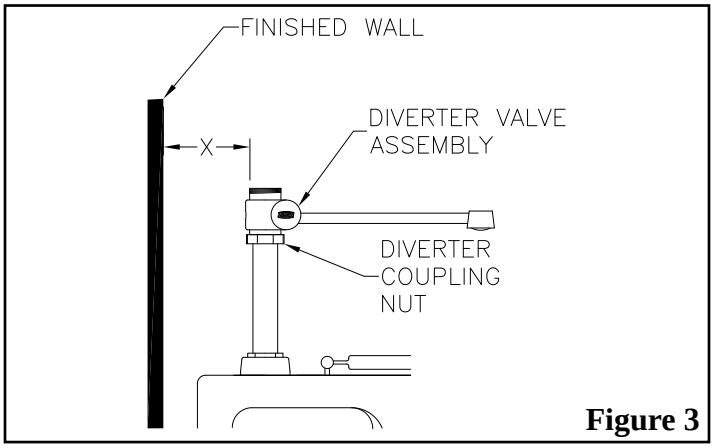

Figure 3

STEP NO. 4 - INSTALL WALL SUPPORT FLANGE (Figure 4A and 4B)
Determine required length of support rod by measuring distance between finished wall and back of diverter valve at support rod hole. Add 1/4" (6mm) to the length determined and cut the support rod to size. Refer to Figure 3.

Turn the diverter valve assembly to allow threading support rod into back of diverter valve body. Slide wall support flange onto support rod and turn the diverter valve assembly so that wall support flange is flush with wall. Use wall support flange as a template and mark off holes on finished wall for mounting screws. Refer to Figure 4A for details.

Remove diverter valve assembly and drill a 1/4" (6mm) hole at the three locations marked. Install an anchor in each 1/4" (6mm) hole.

Insert top of diverter tube into diverter valve and secure diverter coupling nut. Hand tighten diverter coupling nut.

Rotate diverter valve so that support rod flange mounting holes are aligned with three mounting holes in finished wall. Secure using the three (3) screws provided.

Tighten set screw in wall support flange. Refer to Figure 4B.

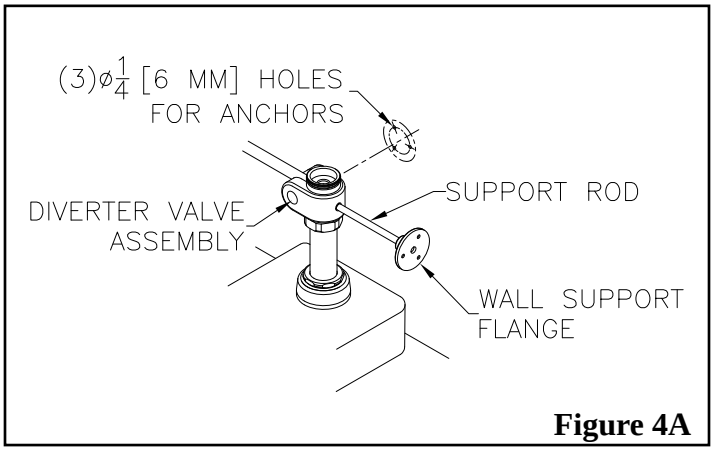

Figure 4A

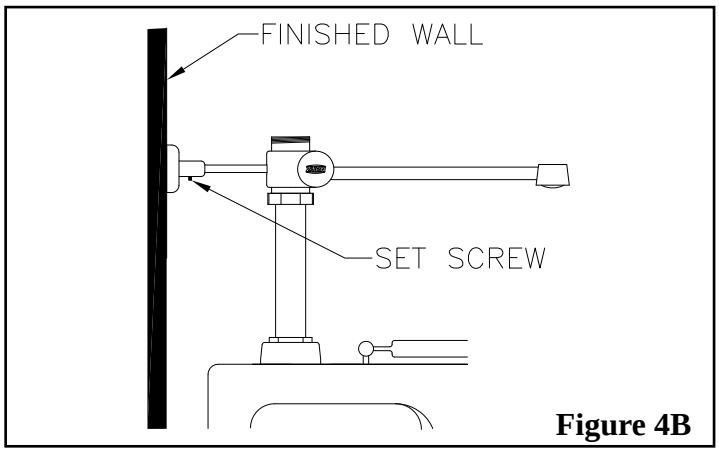

Figure 4B

STEP NO. 5 - INSTALL VACUUM BREAKER FLUSH CONNECTION (Figure5) Slide tube nut onto flush tube. Slide the diverter valve coupling nut, diverter friction washer, and diverter sleeve over vacuum breaker tube and secure tube to diverter valve. Hand tighten diverter valve coupling nut onto diverter valve assembly.

Length of vacuum breaker tube may be shortened to accommodate lower valve installation height.

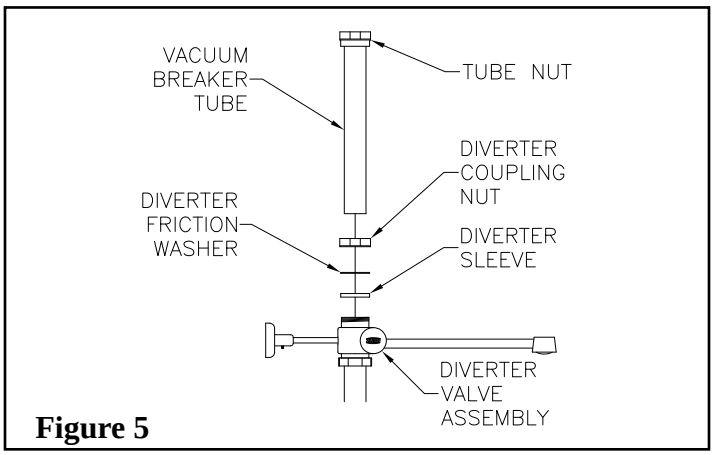

Figure 5

STEP NO. 6 - INSTALL FLUSHOMETER

For detail instructions on installing the flushometer refer to specific valve installation manuals in this catalogue.

MAINTENANCE

CLEANING NOZZLE SPRAY DISC AND SCREEN (Figure 6)

With a phillips head screwdriver remove the phillips head screw by turning counterclockwise. Remove spray disc and screen, and clean with water. Reinstall the screen, spray disk, and phillips head screw and tighten.

CARE OF CHROME PLATED SURFACES

The suggested cleaning of chrome plated surfaces is simply to clean them with mild soap and water, then dry. Commercial cleaning compounds are never recommended.

SEASONAL USE

Valves used in installations subject to shut down because of cold and freezing conditions should be maintained in the following manner. After the main supply has been shut off and the water drained from the system, remove the stop valve and stop valve internals to allow the water to drain from the flush valve itself.

TROUBLE SHOOTING GUIDE

For detail instructions on trouble shooting the flushometer refer to specific valve installation manuals in this catalogue.

REBUILD KITS

The P6000-PN22 Rebuild kit is available with replacement seals. Access to the seals is as follows:

1.) Pull diverter arm to downward position.
2.) Remove set-screw with 3/32 allen wrench.
3.) Remove diverter arm from elbow.
4.) Remove elbow from body to get access to o-rings and rubber grommet.

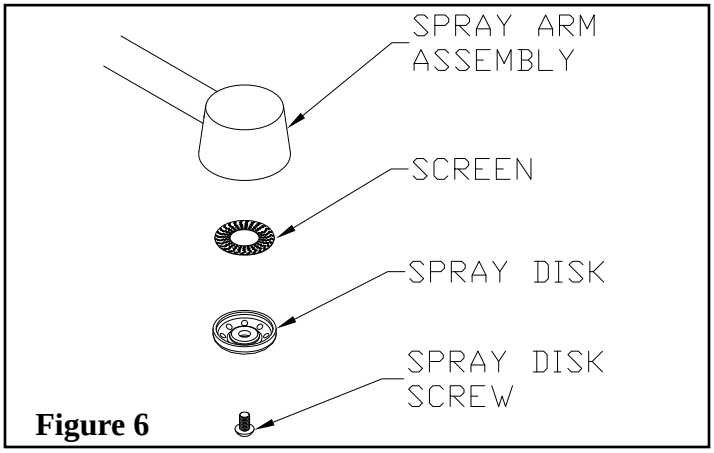

Figure 6

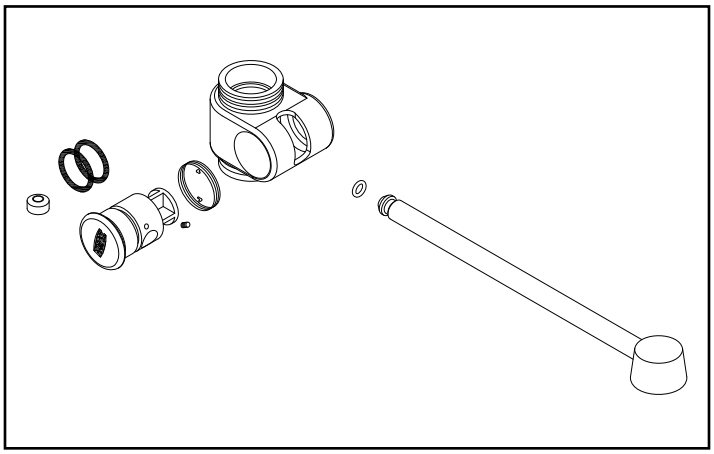

Parts Replacement Guide

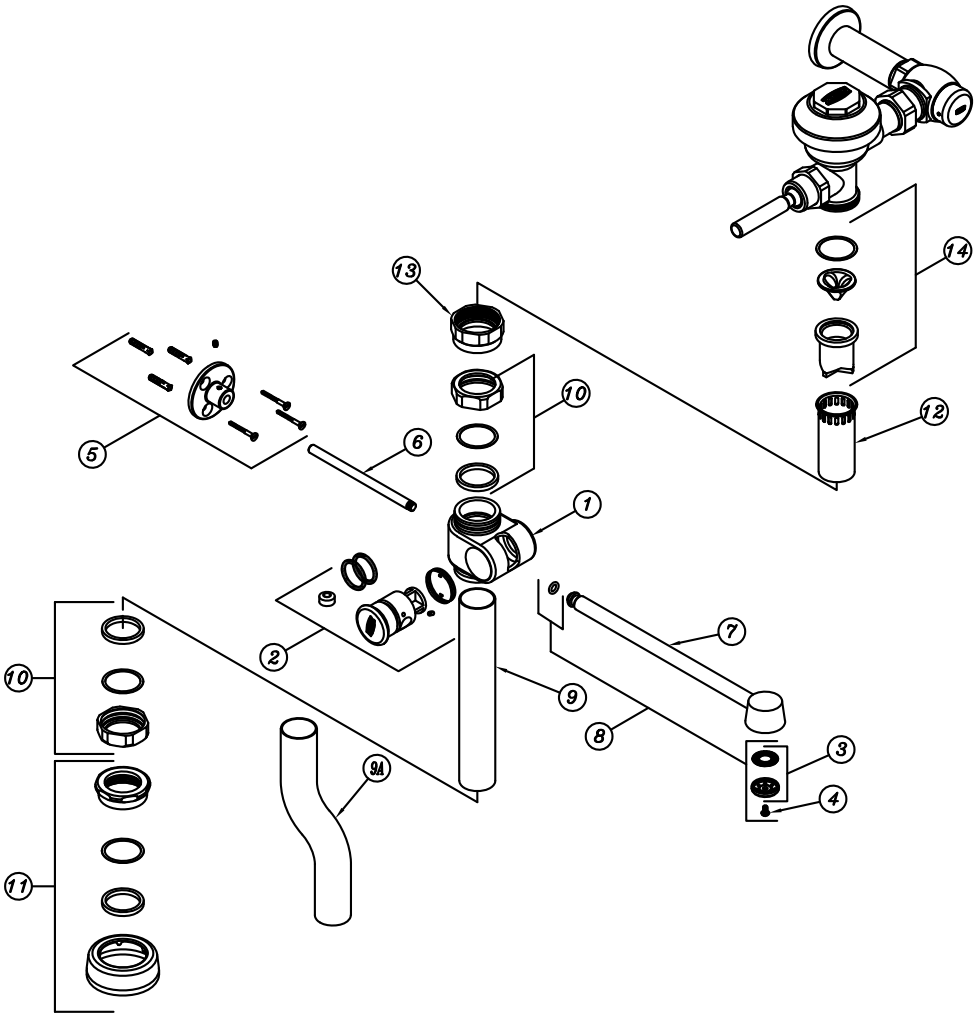

	Description	Product No.
1	Diverter Body	P6000-PN21
2	Elbow Assembly (Elbow, Spring, Setscrew, 2 O-rings and Grommet)	P6000-PN20
3	Spray Disc and Screen	P6000-P3
4	Spray Disc Screw	P6000-P4
5	Wall Flange w/setscrew and Mounting Hardware	P6000-P8
6	Support Rod	P6000-P8-2
7	Spray Arm Assy. 12”	P6000-PN18
8	Spray Arm Repair Kit (O-ring, Spray Disk, Screen and Screw	P6000-PN19
9	Bottom Tube	P6000-P15
9A	Optional Offset Tube for Z6011 Assembly	P6000-P15-LO
10	Coupling Assembly 1-1/2”	P6000-HN
11	Spud Coupling Assembly 1-1/2”	P6000-H
12	Vacuum Breaker Tube	P6000-1-A-CP
13	Tube Nut	P6000-AA-CP
14	Vacuum Breaker Repair Kit	P6000-B
15	Bedpan Diverter Rebuild Kit - (Items 8, 2 (Except Elbow), Tube Gasket)	P6000-PN22