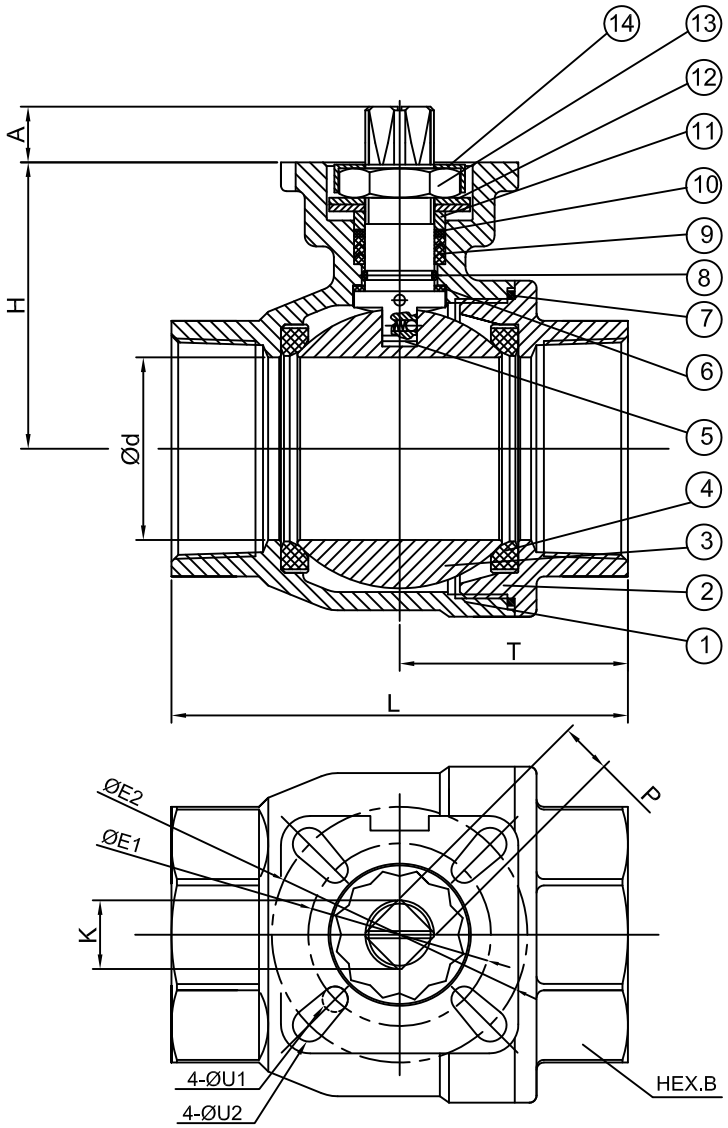

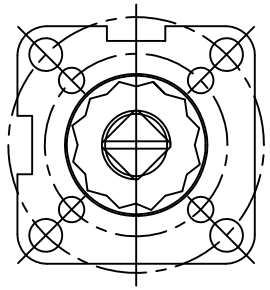

1-1/2" ~ 3"

APPLICABLE STANDARDS:
Design: ASME B16.34, MSS SP-110
Pipe Thread: ASME B1.20.1
Seat/Shell Test: MSS SP-110

Ref.No.	Description	Material	Qty.
14	Stop-lock-cap	304SS	1
13	Stem Nut	A194-8	1
12	Belleville Washer	301SS	2
11	Gland	316SS	1
10	Bushing	50%SS+50%PTFE	1
9	V-Ring Stem Packing	PTFE	1Set
8	O-Ring	FKM(VITON)	1
7	Body Gasket	PTFE	1
6	Thrust Washer	TFM4215	1
5	Stem (Anti-Static Device)	316SS	1
4	Seat	TFM1600+20%GF	2
3	Ball	316SS	1
2	End Cap	ASTM A351 Gr.CF8M	1
1	Body	ASTM A351 Gr.CF8M	1

■ DIMENSION TABLE

Unit: inch

Pressure	New FNW Code	Size	Ød	L	T	H	ØE1	ØE2	ØU1	ØU2	□P	A	ISO5211	K	HEX.B
2000CWP	FNW220AMB	1/4"	0.42	2.44	1.14	1.70	1.42	1.65	0.24	0.24	0.35	0.35	F03/F04	7/16-20UNF	1.06
	FNW220AMC	3/8"	0.50	2.44	1.14	1.70	1.42	1.65	0.24	0.24	0.35	0.35	F03/F04	7/16-20UNF	1.06
	FNW220AMD	1/2"	0.59	2.95	1.36	1.70	1.42	1.65	0.24	0.24	0.35	0.35	F03/F04	7/16-20UNF	1.06
	FNW220AMF	3/4"	0.79	3.15	1.46	2.00	1.42	1.97	0.24	0.28	0.35	0.35	F03/F05	7/16-20UNF	1.26
	FNW220AMG	1"	0.98	3.54	1.77	2.28	1.65	1.97	0.24	0.28	0.43	0.43	F04/F05	9/16-18UNF	1.61
1500CWP	FNW220AMH	1-1/4"	1.26	4.33	2.01	2.48	1.65	1.97	0.24	0.28	0.43	0.43	F04/F05	9/16-18UNF	1.97
	FNW220AMJ	1-1/2"	1.50	4.72	2.36	2.91	1.97	2.76	0.28	0.35	0.55	0.55	F05/F07	3/4-16UNF	2.20
	FNW220AMK	2"	1.97	5.51	2.76	3.27	1.97	2.76	0.28	0.35	0.55	0.55	F05/F07	3/4-16UNF	2.76
	FNW220AML	2-1/2"	2.50	7.28	3.64	4.03	2.76	4.02	0.33	0.41	0.67	0.67	F07/F10	7/8-14UNF	3.54
	FNW220AMM	3"	2.99	8.07	4.04	4.36	2.76	4.02	0.33	0.41	0.67	0.67	F07/F10	7/8-14UNF	4.02

Mark	Amount	Subarea	Revision NO.	Signature	Date
Drawing	hm.huang	2011.1.27	Recheck		
Design					
Check					

1/4"-3" 1500-2000CWP
2PC Thread
Ball Valve
Assembly Drawing
FNW220AM

Material NO.					
Draw. NO.	220AM				
Projection		Material	CF8M	Edition	6
Proportion		Weight		Page of	

FNW™