Maintenance sheet

ATM50
63V151

A. Troubleshooting

If the error code is indicated on the 7-Seg-LED on the PCB (Part #702) of the water heater (and/or the remote controller), refer to Section **B**.

<< It takes long time to get hot water at the fixtures >>

- The time it takes to deliver hot water from the water heater to your fixtures depends on the length of piping between the two. The longer the distance or the bigger the pipes, the longer it will take to get hot water.
- If you would like to receive hot water to your fixtures quicker, you may want to consider a hot water recirculation system.

<< The water is not hot enough or turns cold and stays cold >>

- Compare the flow and temperature. Refer to the "Output temperature chart" of the installation manual.
- Check cross plumbing between cold water lines and hot water lines.
- Check if the gas supply valve fully open, the gas line sized properly and the gas supplies pressure enough. Refer to the "Gas supply and gas pipe sizing" of the installation manual.
- Check the set temperature, and change the dipswitch setting. Refer to Section **D**.
- Refer to **"Water circuit"** in this section.

<<The water is too hot>>

- Check the set temperature, lower setting temperature.

<<The hot water is not available when a fixture is opened>>

- Refer to the **"Power supply circuit"** and **"Water circuit"** in this section.

<<Fluctuation in hot water temperature>>

- Check if the filter on the cold water inlet cleaned. (Part #437)
- Check if the gas line sized properly and the supply gas pressure sufficient.
- Check for cross connection between cold water lines and hot water lines.
- Refer to **"Water circuit"** in this section.

<<Unit does not ignite when water goes through the water heater>>

- Refer to the **"Power supply circuit"** and **"Water circuit"** in this section.
- If you use the remote controller, turn the power button on and then the green LED will light up.
- Check if the filter on the cold water inlet cleaned. (Part #437)
- Refer to **"Water circuit"** in this section.

<<The fan motor still spinning after operation has stopped>>

- This is normal. After operation has stopped, the fan motor keeps running from 35 seconds in order to re-ignite quickly, as well as purge all the exhaust gas out of the flue.

<<Abnormal sound from water heater>>

- An abnormal sound from the water heaters is caused by not enough air supply or wrong installations. The water heater needs more combustion air. Refer to the **"101" error code** in the section **B**.

<<Power supply circuit>>

1. If the remote controller installed, press the "ON/OFF" button of the remote controller, and make sure that the green LED on the "ON/OFF" button of the remote controller is lit. Restart the water heater.
2. Check if that the 7-Seg LED on the PCB (Part #702) of the water heater is lit. If so, the power supply circuit of the water heater is under normal condition. Next, refer to the **"Water circuit"** in this section**.**
3. Check the fuse on the surge box (Part #722), and if it has a brown spot, need to replace it.
4. Check the power supply, and make sure that the water heater has 120 VAC.
5. If the 7-Seg LED on the PCB (Part #702) isn't lit, some electrical parts can be broken. **Consult the manufacturer**.

<<Water circuit>>

1. If you set the remote controller, turn the power button on and then the green LED will light up.
2. Open all hot water faucets, and make sure that there is enough water flow. This water heater needs at least 0.5 GPM water flow to operate.
3. Check for reverse connection and cross connection.
4. Check if the filter on the cold water inlet cleaned. (Part #437)
5. Check if there is no debris or obstruction on the fixtures.
6. Check if water ways in the water heater are frozen. If so, unfreeze them. And refer to installation manual to protect your water heater from freeze.
7. Check if the inlet water pressure is higher than 40 psi. And if it's lower than 40 psi, need to increase the pressure.
8. Check for connections and breakage of wires (Part #418, 421).
9. Check if the motor drive of the water control valve (Part #418) is locked due to scale buildup, and/or water leakage. **Consult the manufacturer**.

B. Error codes

031: Incorrect dipswitch setting

- Check the dipswitch settings on the PCB. Refer to Section **D**.

101: Warning for the "991" error code

- Check the gas type of the water heater. If it's wrong gas type model, replace the water heater to correct one.
- Check if there is any blockage (For example, Damper sticking, Vent Flaps installed on the terminator, Snow build up around terminator, Installed in a closet (No ventilation or lack of combustion air)) in the intake air and/or exhaust. Refer to the "Vent termination clearances" of the installation manual.
- If the water heater is installed as a direct-vent system, check whether there is enough distance between the intake air terminal and the exhaust terminal. Refer to the "Vent termination clearances" of the installation manual.
- Check if the total vent length doesn't exceed 50 ft and the # of elbows is less than 5Ea.
- Check the altitude/elevation of area of where the water heater installed.
- Check if there is grease and/or dirt in the burner (Part #101) and the fan motor (Part #416), especially if the water heater has been installed in a contaminated area.
- Check if there is dust and lint in heat exchanger.
- Check the manifold pressure of the water heater. Refer to installation manual.

111: Ignition failure

1. Check gas supply and inlet gas pressure.
2. Check if the Hi-limit switch (Part #403) is properly functioning.
3. Check for connection/breakage of wires (Part #111, 402, 705, 707), burn marks on the computer board (Part #701), and/or soot on the flame rod (Part #103). And then if O.H.C.F (Part #402) is breakage, **Consult the manufacturer.**
4. Check if there is a buzzing spark ignition sound coming from the burner (Part #101) when water heater prepares for combustion.
5. Listen for the double "clunk" sound coming from the gas valve assembly (Part #114) when water heater goes into combustion.
6. (Only no sparking and/or kick sound) Check voltage on each wire to gas valves assembly (Part #114) and/or the igniter (Part #102). Refer to the **"Appendix A"** in Section **C**.
   *No sparking sound >>>>> Refer to the #1 at **"Appendix A"** in Section **C**.
   *No kick sound >>>>> Refer to the #2 at **"Appendix A"** in Section **C**.
7. Check if there is leaking from heat exchanger (Part #401 or 444).
8. Check if there is dust and lint in nozzles of the manifold (Part #114).
9. Check current on the flame rod (Part #103). Refer to the #3 at **"Appendix A"** in Section **C**.

121: Loss of flame

1. Check gas supply and inlet gas pressure.
2. Check if the Hi-limit switch (Part #403) is properly functioning.
3. Check for connection/breakage of wires (Part #111, 402, 705, 707), burn marks on the computer board (Part #701), and/or soot on the flame rod (Part #103). And then if O.H.C.F (Part #402) is breakage, **Consult the manufacturer**.
4. Check if there is leakage from heat exchanger (Part #401 or 444).
5. Check if there is dust and lint in nozzles of the manifold (Part #114).
6. Check current on the flame rod (Part #103). Refer to the #3 at **"Appendix A"** in Section **C**.

311,321,331: Disconnected/short-circuited thermistor

- Check for connection/breakage of wires and/or debris on thermistor (Part #405, 424, 430, 704).
- Check thermistor resistance. Refer to the **"Appendix D"** in Section **C**.

391: Air-fuel Ratio Rod failure

- Check for connection/breakage of wires (Part #705) and/or soot on the AFR rod. (Part #103).

441: Flow Sensor failure (Only Easy-Link system)

- Check for connection/breakage of wires and/or debris on the flow sensor impeller (Part #421).

510,551: Abnormal Main and Gas Solenoid Valve

- Check for connection/breakage of wires (Part #707) and/or burn marks on the computer board (Part #701).
- Reset power supply of the water heater.
- Check voltage on the each valve on the gas valves assembly (Part #114). Refer to the **"Appendix C"** in Section **C**.

611: Fan motor fault

- Check for connection/breakage of wires, dust buildup in the fan motor (Part #416) and/or burn marks on the computer board (Part #701).
- Check for frozen/corrosion of connectors of the fan motor (Part #416).
- Check voltage between blue wire and each wire of the fan motor (Part #416), and check resistance between white wire and red wire. Refer to the **"Appendix B"** in Section **C**.

631: External pump failure

- Check whether the pump connected to MC50 PCB works properly.

651,661: Water control valve fault (Only Easy-Link system)

- Check the water control valve (Part #418), connection/breakage of wires (Part #418), motor drive locked due to scale buildup, and/or water leakage.
- Check voltage between black wire and red wire. Refer to the **"Appendix F"** in Section **C**.

681: External fan motor failure

- Check whether the external fan motor connected to MC50 PCB works properly.

701: Computer board fault

- Check for connection/breakage of wires (Part #707) and/or burn marks on the computer board (Part #701).

721: False flame detection

1. Clean the flame rod (Part #103).
2. For indoor models, check if condensate drain is installed on the vent collar of the water heater.
3. Check if there is leaking from heat exchanger (Part #401 or 444).

741: Miscommunication between water heater and remote controller

1. Check the model type of the remote controller. Model No. 9007603005 is the correct one.
2. Inspect the connections between the water heater and remote controller. Refer to the "Remote controller connections" of the Installation manual.
3. Check the power supply of the water heater.
4. If this error code appears only the 7-Seg LED on the PCB (Part #702), check the voltage on the remote controller terminal on the PCB. Refer to the **"Appendix E"** in Section **C**.
5. If this error code appears only remote controller, replace the PCB (Part #702).
6. If this error code appears both the PCB (Part #702) and the remote controller, replace the remote controller.

761: Miscommunication between Parent unit and Child units for Easy-link system

- Check if the connections between the parent unit and the child units are correct. Refer to "Easy-Link system" section in the Installation manual.

991: Imperfect combustion

- Refer to the **"101" error code** in this section.

C. Wiring Diagram and check point of the Water heater

BK:BLACK LB:LIGHT BLUE G:GREEN O:ORANGE
P:PURPLE BL:BLUE Y:YELLOW BR:BROWN

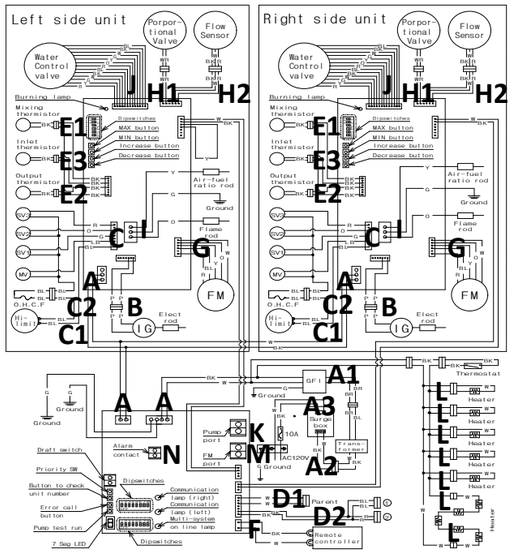

Appendix A (For error code 111)

Check these points during ignition stage.

1. Refer to check point **"B"** on the wiring diagram above.
Check voltage between purple wires.
(Normal: AC 90 to 110 V)
This Check point is normal?
Yes >> Replace the igniter (Part #102)
No >> Go to Next

2. Refer to check point **"C" and "H1"** on the wiring diagram above.
Check the voltage bellows.
C: Between blue wire and light blue wire (#3).
(Normal: DC78 to 100 V)
C: Between blue wire and orange wire (#53).
(Normal: DC78 to 100 V)
H1: Check the voltage between white wire and red wire.
(Normal: DC 1 to 15 V)
These check points are normal?
Yes >> Replace the gas valves assembly. (Part #114)
No >> Replace the PCB. (Part #701)

3. Check current thought the orange flame rod wire (Part #705).
(Normal: more than 1μA)
This check point is normal during operation?
Yes >> Replace the PCB. (Part #701)
No >> Replace the flame rod. (Part #103)

Appendix B (For error code 611)

Refer to check point **"G"** in the diagram to the left and followings.

- Check voltage between red wire and blue wire.
  (Normal: DC 110 to 160 V)
- Check voltage between yellow wire and blue wire.
  (Normal: DC 13 to 17 V)
- Check voltage between orange wire and blue wire
  (Normal: DC 2.0 to 6.5 V)

All check points are normal?
Yes >> Replace the fan motor. (Part #416)
No >> Replace the PCB. (Part #701)

Appendix C (For error code 510 and 551)

Refer to check point **"C"** in the diagram to the left and followings.
Check voltage on the each valve on the gas valves assembly.

- Between blue wire and light blue wire (#3). (Normal: DC 78 to 100 V)
- Between blue wire and green wire. (#9). (Normal: DC 78 to 100 V)
- Between blue wire and orange wire (#53). (Normal: DC 78 to 100 V)
- Between blue wire and red wire (#73). (Normal: DC 78 to 100 V)

All check points are normal?
Yes >> Replace the gas valves assembly. (Part #114)
No >> Replace the PCB. (Part #701)

Appendix D (For error code 311, 321 and 331)

- Mixing thermistor (Find the marking of No.113 on the connector)
  Check point **"E1"**
- Output thermistor (Find the marking of No.12 on the connector)
  Check point **"E2"**
- Inlet thermistor (Find the marking of No.42 on the connector)
  Check point **"E3"**

Check resistance between black wire and black wire.

Temperature	°F	50	59	68	77	86	95
	°C	10	15	20	25	30	35
Resistance	kΩ	15.4	12.6	10.3	8.5	7.0	5.9

All check points are normal?
Yes >> Replace the PCB. (Part #701)
No >> Replace the wrong thermistor. (Part #405, 424, 430)

Appendix E (For error code 741)

Refer to check point **"F"** on the wiring diagram above.
Check voltage on the remote controller terminal on the PCB.
(Normal: DC 11 to 15 V)
This check point is normal?
Yes >> Replace the remote controller.
No >> Replace the PCB. (Part #702)

Appendix F (For error code 651 and 661)

Refer to check point **"J"** on the wiring diagram above.
Check voltage between black wire and red wire. (Normal: DC 13 to 16 V)
This check point is normal?
Yes >> Replace the Water control valve. (Part #418)
No >> Replace the PCB. (Part #701)

D. Dipswitch Settings on the computer board of the water heater

Change the dipswitch settings when the power supply is turning off.
The dark square is the direction the dipswitch should be set to.
DEFAULT is the factory setting.

<Upper bank of dipswitches>

The **upper bank** has certain special functions and generally **should not need adjustment.**

Gas type

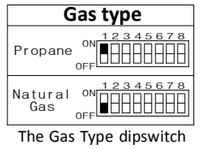

The Gas Type dipswitch should already be properly preset from the factory.

<Lower bank of dipswitches>

The **lower bank** has settings for three functions, shown below.

Easy-Link system

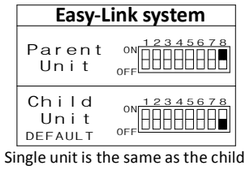

Single unit is the same as the child unit.

Installation type

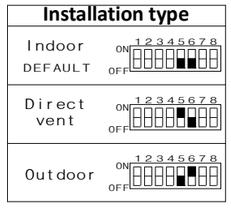

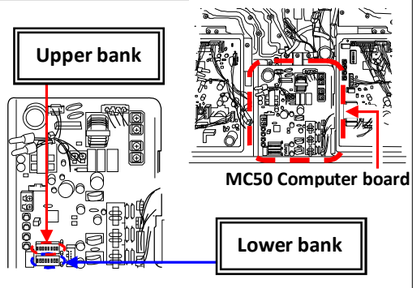

Temperature set

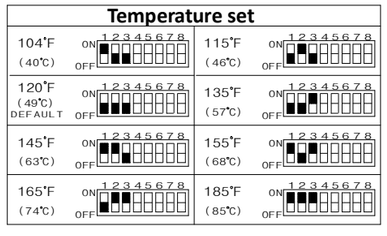

E. Components Diagram / Parts List

Case assembly

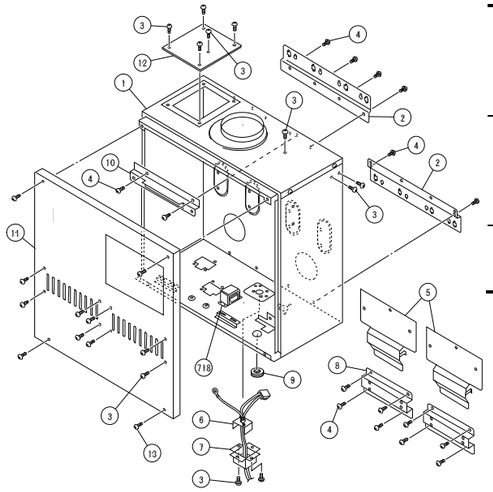

Item#	Part#	Description
001	319143-265	Case assembly
002	319143-012	Brackets
003	319143-325	Screw M4x10 (W/Washer)
004	319143-026	Screw M4x10 (Coated)
005	319143-237	Back guard panel
006	319143-277	Power supply code assembly
007	319143-014	Junction box
008	319143-230	Chamber fixing plate
009	319143-334	Rubber bush
010	319143-236	Exhaust fixing plate
011	319143-262	Front cover for 910
012	319143-246	Air blockage plate
013	319143-025	Screw M4x12 (W/Washer)

Burner assembly

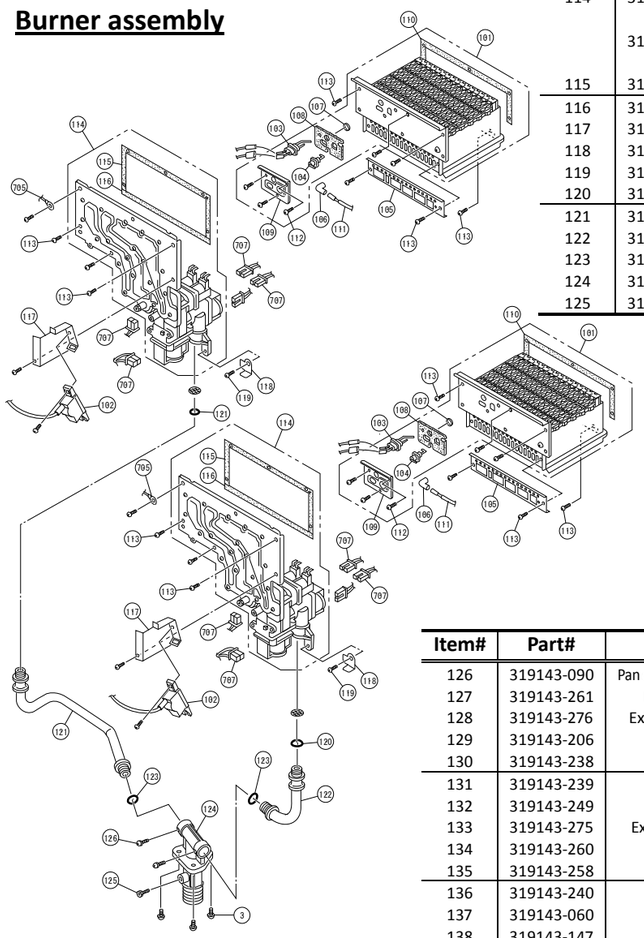

Item#	Part#	Description
101	319143-308	Burner assembly
102	319143-052	Igniter
103	319143-035	Flame rod
104	319143-037	Igniter rod
105	319143-192	Damper
106	319143-038	Rod cap
107	319143-033	Burner window
108	319143-034	Burner holder gasket
109	319143-036	Rod holder
110	319143-032	Burner holder gasket
111	319143-039	High voltage ignite cable
112	319143-059	Pan screw M4x8
113	319143-060	Screw M4x10
114	319143-263	Manifold assembly with gas valve assembly LP
	319143-264	Manifold assembly with gas valve assembly NA
115	319143-044	Manifold gasket A
116	319143-045	Manifold gasket B
117	319143-051	Igniter plate
118	319143-337	Gas connection plate
119	319143-062	Pan screw M4x10
120	319143-057	O-ring P20 NBR (Black)
121	319143-257	Gas pipe left
122	319143-253	Gas pipe right
123	319143-350	O-ring P18 NBR (Black)
124	319143-250	Gas inlet
125	319143-063	Hex head screw M4x8

Item#	Part#	Description
126	319143-090	Pan screw M4x6 (W/Washer)
127	319143-261	Exhaust connector
128	319143-276	Exhaust combining box
129	319143-206	Silicon ring
130	319143-238	Exhaust gasket A
131	319143-239	Exhaust gasket B
132	319143-249	Case beam
133	319143-275	Exhaust auxiliary plate
134	319143-260	Duct
135	319143-258	Duct cover
136	319143-240	Duct gasket
137	319143-060	Screw M4x10
138	319143-147	Fan damper
139	319143-330	Screw M3x6
140	319143-252	Freeze protection thermostat

910 ASME

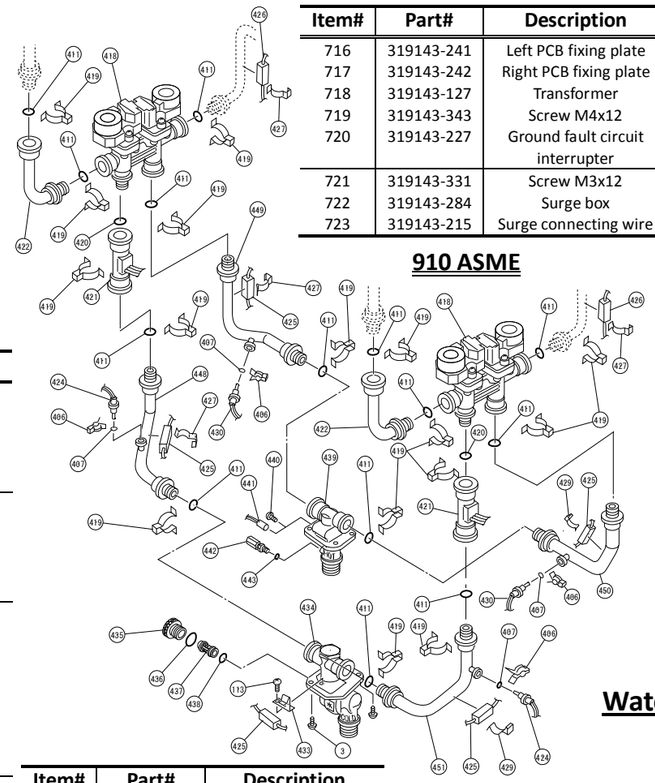

Item#	Part#	Description
716	319143-241	Left PCB fixing plate
717	319143-242	Right PCB fixing plate
718	319143-127	Transformer
719	319143-343	Screw M4x12
720	319143-227	Ground fault circuit interrupter
721	319143-331	Screw M3x12
722	319143-284	Surge box
723	319143-215	Surge connecting wire

Item#	Part#	Description
701	319143-266	910 PCB
702	319143-267	MC50 PCB
703	319143-232	PV-FS wire
704	319143-233	Thermistor connecting wire
705	319143-243	Flame rod wire
706	319143-231	Igniter wire
707	319143-248	Gas valve wire
708	319143-245	AC 100V wire
709	319143-183	910 PCB cover
710	319143-274	MC50 PCB cover
711	319143-247	Multi communication wire
712	319143-234	Left communication wire
713	319143-235	Right communication wire
714	319143-244	Remote controller terminal
715	319143-048	Wire Cramp

Computer board assembly

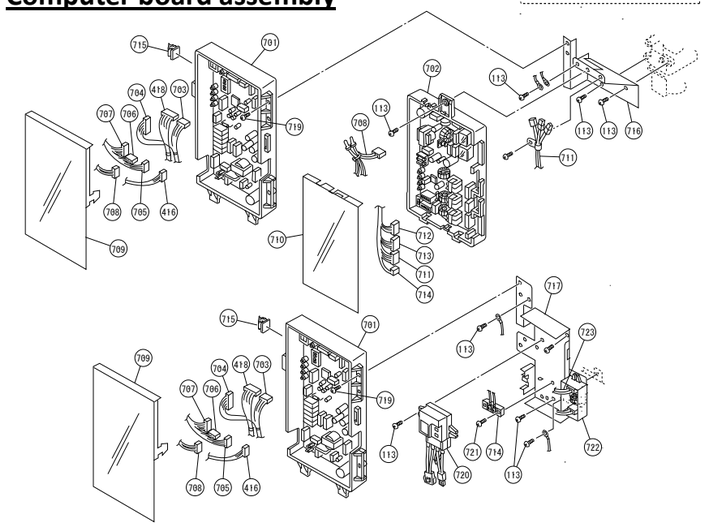

910

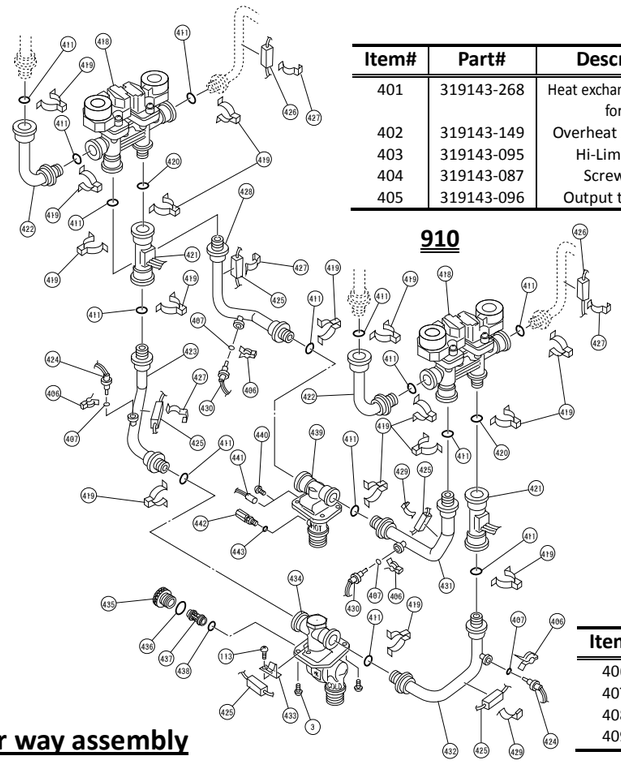

Item#	Part#	Description
401	319143-268	Heat exchanger assembly for 910
402	319143-149	Overheat cut-off-fuse
403	319143-095	Hi-Limit switch
404	319143-087	Screw M3X6
405	319143-096	Output thermistor

Item#	Part#	Description
406	319143-097	Fastener “14-11”
407	319143-082	O-ring P4 FKM
408	319143-224	Pipe heater 122
409	319143-088	Heater fixing plate

Water way assembly

Combustion and Exhaust assembly

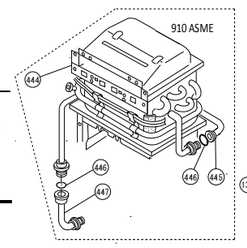

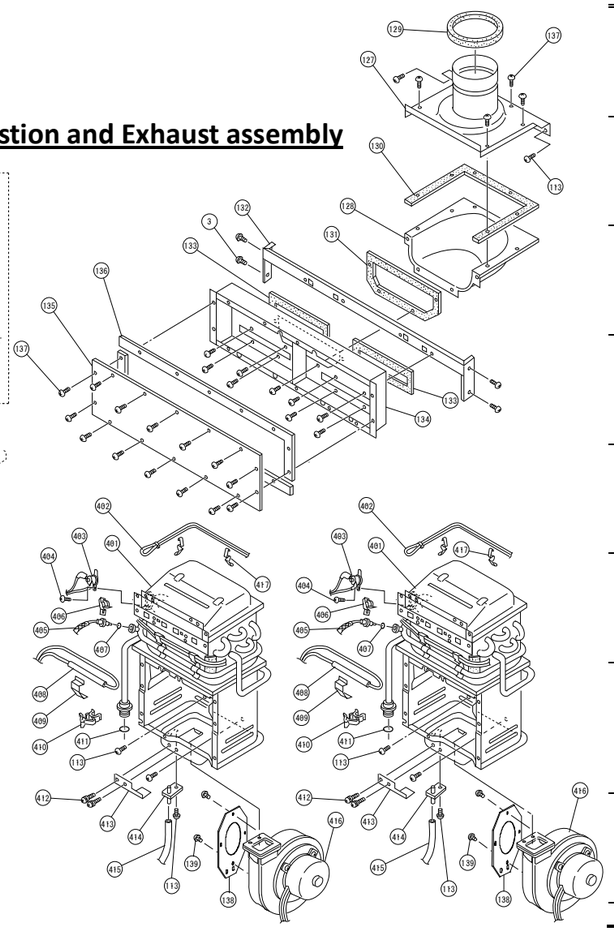

Item#	Part#	Description
411	319143-083	O-ring P16 FKM
412	319143-061	Pan screw M4x12 (W/Washer)
413	319143-229	Fan motor fixing plate
414	319143-042	Pressure port
415	319143-344	Urethane tube
416	319143-043	Fan motor
417	319143-066	Fuse fixing plate 18
418	319143-086	Water control valve
419	319143-077	Fastener “16AG”
420	319143-091	O-ring P15 FKM
421	319143-092	Flow sensor
422	319143-251	Connecting pipe
423	319143-254	Left cold pipe for 910
424	319143-085	Inlet thermistor
425	319143-333	Heater 502
426	319143-068	Heater 101
427	319143-125	Heater fixing plate 16
428	319143-273	Left hot pipe for 910
429	319143-124	Heater fixing plate 20
430	319143-190	Mixing thermistor
431	319143-256	Right hot pipe for 910
432	319143-255	Right cold pipe for 910
433	319143-076	Heater plate
434	319143-259	Water inlet
435	319143-070	Filter plug
436	319143-071	O-ring P25 FKM
437	319143-072	Water inlet filter
438	319143-073	O-ring JASO #1021 FKM
439	319143-269	Water outlet
440	319143-328	Screw M4x6
441	319143-223	Heater 117
442	319143-199	Outlet drain plug
443	319143-080	O-ring P6 FKM
444	319143-270	Heat exchanger assembly for 910 ASME
445	319143-271	Connecting pipe for 910ASME
446	319143-349	O-ring P18 FKM
447	319143-278	Connecting pipe for 910 ASME
448	319143-310	Left cold pipe for 910 ASME
449	319143-313	Left hot pipe for 910 ASME
450	319143-312	Right hot pipe for 910 ASME
451	319143-311	Right cold pipe for 910 ASME