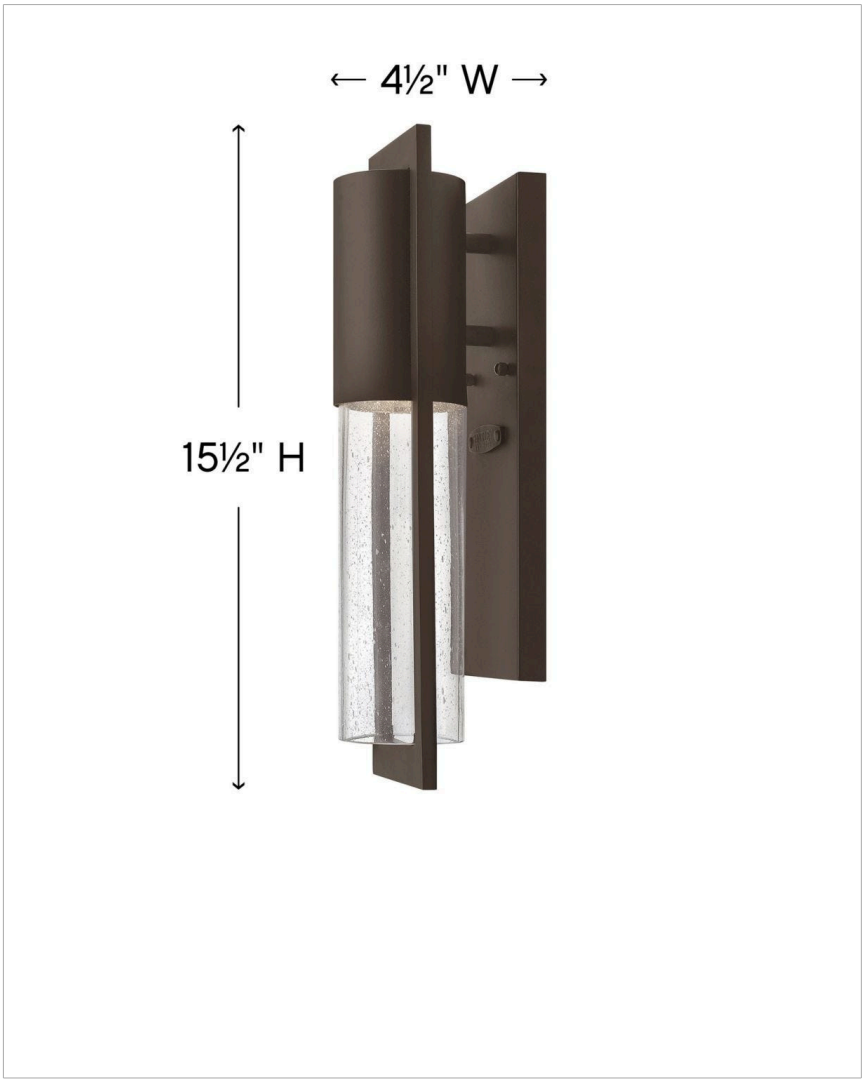






# SHELTER

## 1326KZ

EXTRA SMALL WALL MOUNT LANTERN

Shelter's minimalist style in aluminum creates a chic, dramatic statement as the light from above grazes through its clear seedy glass. Shelter comes standard Dark Sky compliant.

| DETAILS | |
|---|---|
| FINISH: | Buckeye Bronze |
| MATERIAL: | Solid Aluminum |
| GLASS: | Clear Seedy |

| DIMENSIONS | |
|---|---|
| WIDTH: | 4.5" |
| HEIGHT: | 15.5" |
| WEIGHT: | 3lb |
| BACK PLATE: | 4.5"W X 12"H |
| EXTENSION: | 4.8” |
| TOP TO OUTLET: | 5.75" |

| LIGHT SOURCE | |
|---|---|
| LIGHT SOURCE: | LED Lamp |
| WATTAGE: | 1-7w GU10 LED, 50w Equiv. |
| VOLTAGE: | 120v |

| SHIPPING | |
|---|---|
| CARTON LENGTH: | 18.5 |
| CARTON WIDTH: | 9.9 |
| CARTON HEIGHT: | 7.3 |
| CARTON WEIGHT: | 4 |

**PRODUCT DETAILS:**

- Suitable for use in wet (outdoor direct rain or sprinkler) locations as defined by NEC and CEC. Meets United States UL Underwriters Laboratories & CSA Canadian Standards Association Product Safety Standards
- Fixture is Dark Sky compliant and engineered to minimize light glare upward into the night sky
- 2 year finish warranty
- Bold lines and a clean, minimalist style complement contemporary architecture
- Bold and robust dark bronze finish

HINKLEY

**HINKLEY**
33000 Pin Oak Parkway
Avon Lake, OH 44012

**PHONE: (440) 653-5500**
Toll Free: 1 (800) 446-5539

**hinkley.com**