Installation and Operating Manual

RESIDENTIAL GAS WATER HEATERS

POWER DIRECT VENT GAS MODELS
WITH HOT SURFACE IGNITION
NOT FOR USE IN MANUFACTURED (MOBILE) HOMES
SERIES 300, 301

state WATER HEATERS
www.statewaterheaters.com



WARNING: If the information in these instructions is not followed exactly, a fire or explosion may result causing property damage, personal injury or death.

- **Do not store or use gasoline or other flammable vapors and liquids in the vicinity of this or any other appliance.**

- **WHAT TO DO IF YOU SMELL GAS:**

  - **Do not try to light any appliance.**
  - **Do not touch any electrical switch; do not use any phone in your building.**
  - **Immediately call your gas supplier from a neighbor's phone. Follow the gas supplier's instructions.**
  - **If you cannot reach your gas supplier, call the fire department.**

- **Installation and service must be performed by a qualified installer, service agency or the gas supplier.**



⚠ WARNING

Read and understand instruction manual and safety messages before installing, operating or servicing this water heater.

Failure to follow instructions and safety messages could result in death or serious injury.

Instruction manual must remain with water heater.

• For Your Safety •

AN ODORANT IS ADDED TO THE GAS USED BY THIS WATER HEATER.

ALL TECHNICAL AND WARRANTY QUESTIONS: SHOULD BE DIRECTED TO THE LOCAL DEALER FROM WHOM THE WATER HEATER WAS PURCHASED. IF YOU ARE UNSUCCESSFUL, PLEASE CONTACT THE COMPANY LISTED ON THE RATING PLATE ON THE WATER HEATER.

KEEP THIS MANUAL IN THE POCKET ON HEATER FOR FUTURE REFERENCE
WHENEVER MAINTENANCE ADJUSTMENT OR SERVICE IS REQUIRED.

TABLE OF CONTENTS

Safe Installation, Use And Service . . . 3
General Safety . . . 4
Introduction . . . 6
  Qualified Installer Or Service Agency . . . 6
  Preparing For The Installation . . . 6
Installation Requirements For The Commonwealth Of Massachusetts . . . 7
Typical Installation . . . 9
  Get To Know Your Water Heater - Gas Models (List Referencing Figures 1-5) . . . 9
  Replacement Parts And Deliming Products . . . 10
  Combo Heating Inlet And Outlet Side Taps . . . 10
  Water Piping - Mixing Valve Usage . . . 11
    Mixing Valves
  Water Heater Operation . . . 12
  Electrical Requirements & Wiring Diagram . . . 13
Safety Lockouts . . . 14
  High Limit Controls (Energy Cut Off) . . . 14
    Thermostat/Water Temperature
    Blower High Limit Switch
  Blower Air Pressure Switches . . . 14
Locating The New Water Heater . . . 14
  Facts To Consider About The Location . . . 14
    Clearances To Combustibles
    Floors With Carpeting
    Clearances For Servicing
  High Ambient Temperature Installations . . . 15
    Important Notes and Warnings
  Insulation Blankets . . . 16
  Air Requirements . . . 16
Installing The New Water Heater . . . 17
  Water Piping . . . 17
  Space Heating And Potable Water Systems . . . 17
  Combo Heating . . . 18
    System Requirements
    Installation
  Closed Water Systems . . . 19
  Thermal Expansion . . . 19
  Temperature-Pressure Relief Valve . . . 20
    T&P Valve Discharge Pipe Requirements:
    Temperature-Pressure Relief Valve And Pipe Insulation
  High Altitude Installation . . . 21
  Gas Piping . . . 21
  Sediment Traps . . . 22
  Filling The Water Heater . . . 23
Venting . . . 24
  Vent Kit . . . 24
  Termination Clearances (Side Wall) . . . 25
  Termination Types . . . 26
  Side Wall Vent Termination (Standard) . . . 26
  Roof Vent Termination (Standard) . . . 26
  Side Wall Vent option For Cold Climates . . . 27
  Deluxe Horizontal Venting Kit . . . 28
    “Pyramid” Vent Terminal
    “Mushroom” Vent Terminal
    Connections To The Air Box
  Low Profile Side Wall Vent Termination . . . 30
    Installation Procedure
  Concentric Vent Termination . . . 31
  Multiple Concentric Vent Termination . . . 32
  Tee Termination (Sidewall & Roof) . . . 33
  Vent Pipe Material . . . 34
  Polypropylene Vent Systems . . . 34
  Vent Pipe Length And Sizing . . . 34
    Vent Screens
    Vent Pipe Installation
    Vent Pipe Runs
    Vent Terminal Installations
  Vent Pipe Preparation . . . 38
  Blower Assembly Installation . . . 40
    Connections To The Blower And Air Duct
  Condensate (Exhaust) . . . 42
  Condensate (Intake) . . . 42
  Installation Checklist . . . 43
Lighting Instructions . . . 44
Operating The Temperature Control System . . . 45
  Gas Control Valve/Thermostat . . . 46
For Your Information . . . 47
  Start Up Conditions . . . 47
    Condensation
    Smoke/Odor
    Strange Sounds
  Operational Conditions . . . 47
    Smelly Water
  “Air” In Hot-Water Faucets . . . 47
Periodic Maintenance . . . 48
  General Upkeep . . . 48
  Venting System Inspection . . . 48
  Burner Operation And Inspection . . . 48
  Combustion Chamber And Burner Cleaning . . . 49
  Housekeeping . . . 49
  Temperature-Pressure Relief Valve Test . . . 49
  Draining And Flushing . . . 50
    To Drain The Water Heater Storage Tank
    To Flush The Water Heater Storage Tank
  Anode Rod Maintenance . . . 51
Leakage Checkpoints . . . 52
  Service . . . 52
Reference Parts Listing . . . 53
Troubleshooting Guidelines . . . 55
  Lockouts . . . 55
    Soft Lockout
    Hard Lockout
  Resetting The Heater Control . . . 55
  Ignition State And Timing . . . 55
  System Status And Error Codes . . . 56
  Reading The LED Flash Sequence . . . 56
  Corrective Actions . . . 57
  Other Symptoms . . . 59

SAFE INSTALLATION, USE AND SERVICE

Your safety and the safety of others is extremely important in the installation, use and servicing of this water heater. Many safety-related messages and instructions have been provided in this manual and on your own water heater to warn you and others of a potential injury hazard. Read and obey all safety messages and instructions throughout this manual. It is very important that the meaning of each safety message is understood by you and others who install, use or service this water heater.

	**This is the safety alert symbol. It is used to alert you to potential personal injury hazards. Obey all safety messages that follow this symbol to avoid possible injury or death.**

DANGER	**DANGER indicates an imminently hazardous situation which, if not avoided, will result in death or injury.**
WARNING	**WARNING indicates a potentially hazardous situation which, if not avoided, could result in death or injury.**
CAUTION	**CAUTION indicates a potentially hazardous situation which, if not avoided, could result in minor or moderate injury.**
CAUTION	**CAUTION used without the safety alert symbol indicates a potentially hazardous situation which, if not avoided, could result in property damage**

All safety messages will generally tell you about the type of hazard, what can happen if you do not follow the safety message and how to avoid the risk of injury.

This product is certified to comply with a maximum weighted average of 0.25% lead content as required in some areas.

IMPORTANT DEFINITIONS

Qualified Installer: A qualified installer must have ability equivalent to a licensed tradesman in the fields of plumbing, air supply, venting and gas supply, including a thorough understanding of the requirements of the **"National Fuel Gas Code", ANSI Z223.1/NFPA 54** as it relates to the installation of gas fired water heaters. The qualified installer must also be familiar with the design features and use of flammable vapor ignition resistant water heaters and have a thorough understanding of this Installation and Operating manual.

Service Agency: A service agency also must have ability equivalent to a licensed tradesman in the fields of plumbing, air supply, venting and gas supply, including a thorough understanding of the requirements of the **"National Fuel Gas Code", ANSI Z223.1/NFPA 54** as it relates to the installation of gas fired water heaters. The service agency must also have a thorough understanding of this Installation and Operating manual, and be able to perform repairs strictly in accordance with the service guidelines provided by the manufacturer.

Gas Supplier: The Natural Gas or Propane Utility or service who supplies gas for utilization by the gas burning appliances within this application. The gas supplier typically has responsibility for the inspection and code approval of gas piping up to and including the Natural Gas meter or Propane storage tank of a building. Many gas suppliers also offer service and inspection of appliances within the building.

GENERAL SAFETY



⚠ WARNING

Read and understand instruction manual and safety messages before installing, operating or servicing this water heater.

Failure to follow instructions and safety messages could result in death or serious injury.

Instruction manual must remain with water heater.



⚠ WARNING

Fire Hazard

For continued protection against risk of fire:

- Do not install water heater on carpeted floor.
- Do not operate water heater if flood damaged.

⚠ DANGER

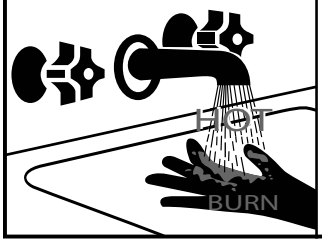

Water temperature over 125°F can cause severe burns instantly resulting in severe injury or death.

Children, the elderly and the disabled are at highest risk of scald injury.

Feel water before bathing or showering.

Temperature limiting valves are available.

Read instruction manual for safe temperature setting.

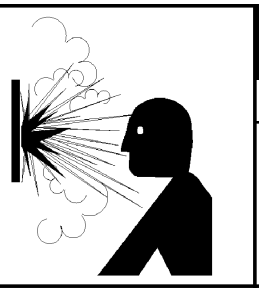

⚠ WARNING

Explosion Hazard

- Overheated water can cause water tank explosion.
- Properly sized temperature and pressure relief valve must be installed in opening provided.

⚠ WARNING

Fire or Explosion Hazard

- Do not store or use gasoline or other flammable vapors and liquids in the vicinity of this or any other appliance.
- Avoid all ignition sources if you smell gas.
- Do not expose water heater control to excessive gas pressure.
- Use only gas shown on rating plate.
- Maintain required clearances to combustibles.
- Keep ignition sources away from faucets after extended period of non-use.



Read instruction manual before installing, using or servicing water heater.



GENERAL SAFETY

CAUTION

Improper Installation, use and service may result in property damage.

- Do not operate water heater if flood damaged.
- Inspect anode rods regularly, replace when significantly depleted.
- Install in location with drainage.
- Fill tank with water before operation.
- Properly sized thermal expansion tanks are required on all closed water systems.

Refer to this manual for installation and service.



⚠ WARNING

- Before servicing the water heater, make sure the blower assembly is unplugged or the electrical supply to the water heater is tumed "OFF".
- Label all wires prior to disconnection when servicing controls. Wiring error can cause improper and dangerous operation. Verify proper operation after servicing.
- Failure to do this could result in death, serious bodily injury, or property damage.

⚠ WARNING

Breathing Hazard - Carbon Monoxide Gas

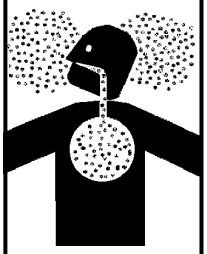

- **Install vent system in accordance with codes.**
- **Do not operate water heater if flood damaged.**
- **For operation above 10,100', a high altitude orifice must be installed.**
- **Do not operate if soot buildup is present.**
- **Do not obstruct water heater air intake with insulating jacket.**
- **Do not obstruct blower air intake.**
- **Do not place chemical vapor emitting products near water heater.**
- **Gas and carbon monoxide detectors are available.**
- **No vent damper installation is compatible with this power vented water heater.**

Breathing carbon monoxide can cause brain damage or death. Always read and understand instruction manual.

⚠ WARNING

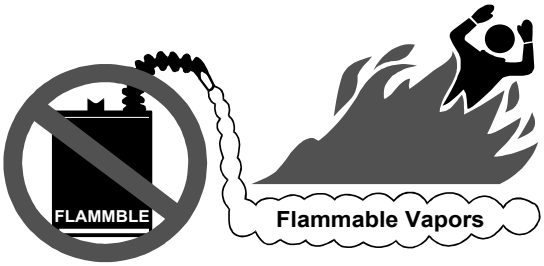

⚠ Vapors from flammable liquids may explode and catch fire causing death or severe burns.

Do not use or store flammable products such as gasoline, solvents or adhesives in the same room or area near the water heater.

Keep flammable products:
1. far away from heater,
2. in approved containers,
3. tightly closed and
4. out of children's reach.

Water heater has a main burner and hot surface igniter. The hot surface igniter:
1. can be triggered at any time and
2. the hot surface will ignite flammable vapors.

Vapors:
1. cannot be seen,
2. are heavier than air,
3. go a long way on the floor and
4. can be carried from other rooms to the electrodes by air currents.

Installation: Do not install the water heater where flammable products will be stored or used.

INTRODUCTION

Thank You for purchasing this water heater. Properly installed and maintained, it should give you years of trouble free service.

This water heater is suitable for potable water heating and space heating applications but not for space heating only applications.

Abbreviations found in this Installation and Operating manual:

- CSA - Canadian Standards Association
- ANSI - American National Standards Institute
- NFPA - National Fire Protection Association
- ASME - American Society of Mechanical Engineers
- UL - Underwriters Laboratories Inc.
- AHRI - Air Conditioning, Heating and Refrigeration Institute.

This gas-fired water heater is design certified by CSA International as a Category IV water heater, under **Water Heater Standard ANSI Z21.10.1 • CSA 4.1** or **ANSI Z21.10.3 • CSA 4.3** (current edition), as applicable.

QUALIFIED INSTALLER OR SERVICE AGENCY

Installation and service of this water heater requires ability equivalent to that of a Qualified Agency (as defined by ANSI below) in the field involved. Installation skills such as plumbing, air supply, venting, gas supply and electrical supply are required in addition to electrical testing skills when performing service.

ANSI Z223.1 2006 Sec. 3.3.83: "Qualified Agency" - "Any individual, firm, corporation or company that either in person or through a representative is engaged in and is responsible for (a) the installation, testing or replacement of gas piping or (b) the connection, installation, testing, repair or servicing of appliances and equipment; that is experienced in such work; that is familiar with all precautions required and that has complied with all the requirements of the authority having jurisdiction."

If you are not qualified (as defined by ANSI above) and licensed or certified as required by authority having jurisdiction to perform a given task, do not attempt to perform any of the procedures described in this manual. If you do not understand the instructions given in this manual do not attempt to perform any procedures outlined in this manual.

PREPARING FOR THE INSTALLATION

1. Read the "General Safety" section of this manual first and then entire manual carefully. If you don't follow safety rules, the water heater will not operate properly. It could cause DEATH, SERIOUS BODILY INJURY AND/OR PROPERTY DAMAGE. This manual contains instructions for installation, operation, and maintenance of the gas-fired water heater. It also contains warnings throughout the manual that you must read and be aware of. All warnings and instructions are essential to proper operation of the water heater and your safety. Since we cannot put everything on the first few pages, READ ENTIRE MANUAL BEFORE ATTEMPTING TO INSTALL OR OPERATE THE WATER HEATER.
2. The installation must conform with these instructions and local code authority having jurisdiction. In absence of local codes, installation must comply with current editions of the **"National Fuel Gas Code", ANSI Z223.1/NFPA 54** and **"National Electrical Code", NFPA 70**. All documents are available from:

   CSA International,
   8501 East Pleasant Valley Road,
   Cleveland, Ohio, United States
   44131-5575.

   NFPA documents are also available from:
   National Fire Protection Association,
   1 Batterymarch Park,
   Quincy, MA 02269.

3. The water heater, when installed, must be electrically grounded in accordance with the local codes or in the absence of local codes: current edition of the **"National Electrical Code", NFPA 70**.
4. If after reading this manual you have any questions or do not understand any portion of the instructions, call the local gas utility or the manufacturer whose name appears on the rating plate.
5. Carefully plan the place where you are going to put the water heater. Correct combustion, vent action, and vent pipe installation are very important in preventing death from possible carbon monoxide poisoning and fires (see Figure 13). Examine the location to ensure the water heater complies with the "Locating The New Water Heater" section in this manual.
6. For installation in areas subject to earthquakes, this water heater must be braced, anchored, or strapped to avoid falling or moving during an earthquake. See instructions for correct installation procedures. Instructions may be obtained from:

   California Office of the State Architect,
   400 P Street,
   Sacramento, CA 95814.

7. Massachusetts Code requires this water heater to be installed In accordance with Massachusetts 248-CMR 2.00: State Plumbing Code and 248-CMR 5.00.
8. This product is certified to comply with a maximum weighted average of 0.25% lead content as required in some areas.

INSTALLATION REQUIREMENTS FOR THE COMMONWEALTH OF MASSACHUSETTS

COMMONWEALTH OF MASSACHUSETTS

For all side wall terminated, horizontally vented power vent, direct vent and power direct vent gas fueled water heaters installed in every dwelling, building or structure used in whole or in part for residential purposes, including those owned or operated by the Commonwealth and where the side wall exhaust vent termination is less than seven (7) feet above finished grade in the area of the venting, including but not limited to decks and porches, the following requirements shall be satisfied:

INSTALLATION OF CARBON MONOXIDE DETECTORS

At the time of installation of the side wall horizontal vented gas fueled equipment, the installing plumber or gasfitter shall observe that a hard wired carbon monoxide detector with an alarm and battery back-up is installed on the floor level where the gas equipment is to be installed. In addition, the installing plumber or gasfitter shall observe that a battery operated or hard wired carbon monoxide detector with an alarm is installed on each additional level of the dwelling, building or structure served by the sidewall horizontal vented gas fueled equipment. It shall be the responsibility of the property owner to secure the services of qualified licensed professionals for the installation of hard wired carbon monoxide detectors.

In the event that the side wall horizontally vented gas fueled equipment is installed in a crawl space or an attic, the hard wired carbon monoxide detector with alarm and battery back-up may be installed on the next adjacent floor level.

In the event that the requirements of this subdivision can not be met at the time of completion of installation, the owner shall have a period of thirty (30) days to comply with the above requirements provided that during said thirty (30) day period, a battery operated carbon monoxide detector with an alarm shall be installed.

APPROVED CARBON MONOXIDE DETECTORS

Each carbon monoxide detector as required in accordance with the above provisions shall comply with NFPA 720 and be ANSI/ UL 2034 listed and CSA certified.

SIGNAGE

A metal or plastic identification plate shall be permanently mounted to the exterior of the building at a minimum height of eight (8) feet above grade directly in line with the exhaust vent terminal for the horizontally vented gas fueled heating appliance or equipment. The sign shall read, in print size no less than one- half (1/2) inch in size, “GAS VENT DIRECTLY BELOW. KEEP CLEAR OF ALL OBSTRUCTIONS.”

INSPECTION

The state or local gas inspector of the side wall horizontally vented gas fueled equipment shall not approve the installation unless, upon inspection, the inspector observes carbon monoxide detectors and signage installed in accordance with the provisions of 248 CMR 5.08(2)(a) 1 through 4.

EXEMPTIONS

The following equipment is exempt from 248 CMR 5.08(2) (a) 1 through 4:

1. The equipment listed in Chapter 10 entitled “Equipment Not Required To Be Vented” in the most current edition of NFPA 54 as adopted by the Board; and
2. Product Approved side wall horizontally vented gas fueled equipment installed in a room or structure separate from the dwelling, building, or structure used in whole or in part for residential purposes.

MANUFACTURER REQUIREMENTS - GAS EQUIPMENT VENTING SYSTEM PROVIDED

When the manufacturer of Product Approved side wall horizontally vented gas equipment provides a venting system design or venting system components with the equipment, the instructions provided by the manufacturer for installation of the equipment and the venting system shall include:

1. Detailed instructions for the installation of the venting system design or the venting system components; and
2. A complete parts list for the venting system design or venting system.

MANUFACTURER REQUIREMENTS - GAS EQUIPMENT VENTING SYSTEM NOT PROVIDED

When the manufacturer of Product Approved side wall horizontally vented gas fueled equipment does not provide the parts for venting the flue gases, but identifies “special venting systems,” the following requirements shall be satisfied by the manufacturer:

1. The referenced “special venting system” instructions shall be included with the appliance or equipment installation instructions; and
2. The “special venting systems” shall be Product Approved by the Board, and the instructions for that system shall include a parts list and detailed installation instructions.

A copy of all installation instructions for all Product Approved side wall horizontally vented gas fueled equipment, all venting instructions, all parts lists for venting instructions, and/or all venting design instructions shall remain with the appliance or equipment at the completion of the installation.

INSTALLATION GRAPHIC: GAS-FIRED POTABLE WATER HEATING/SPACE HEATING SYSTEM

- **If your water heater will be installed in the Commonwealth of Massachusetts, refer to the following graphic during installation and during modifications to the water supply system.**

TYPICAL MIXING VALVE INSTALLATION
COMBINATION SPACE HEATING / POTABLE WATER HEATING SYSTEM

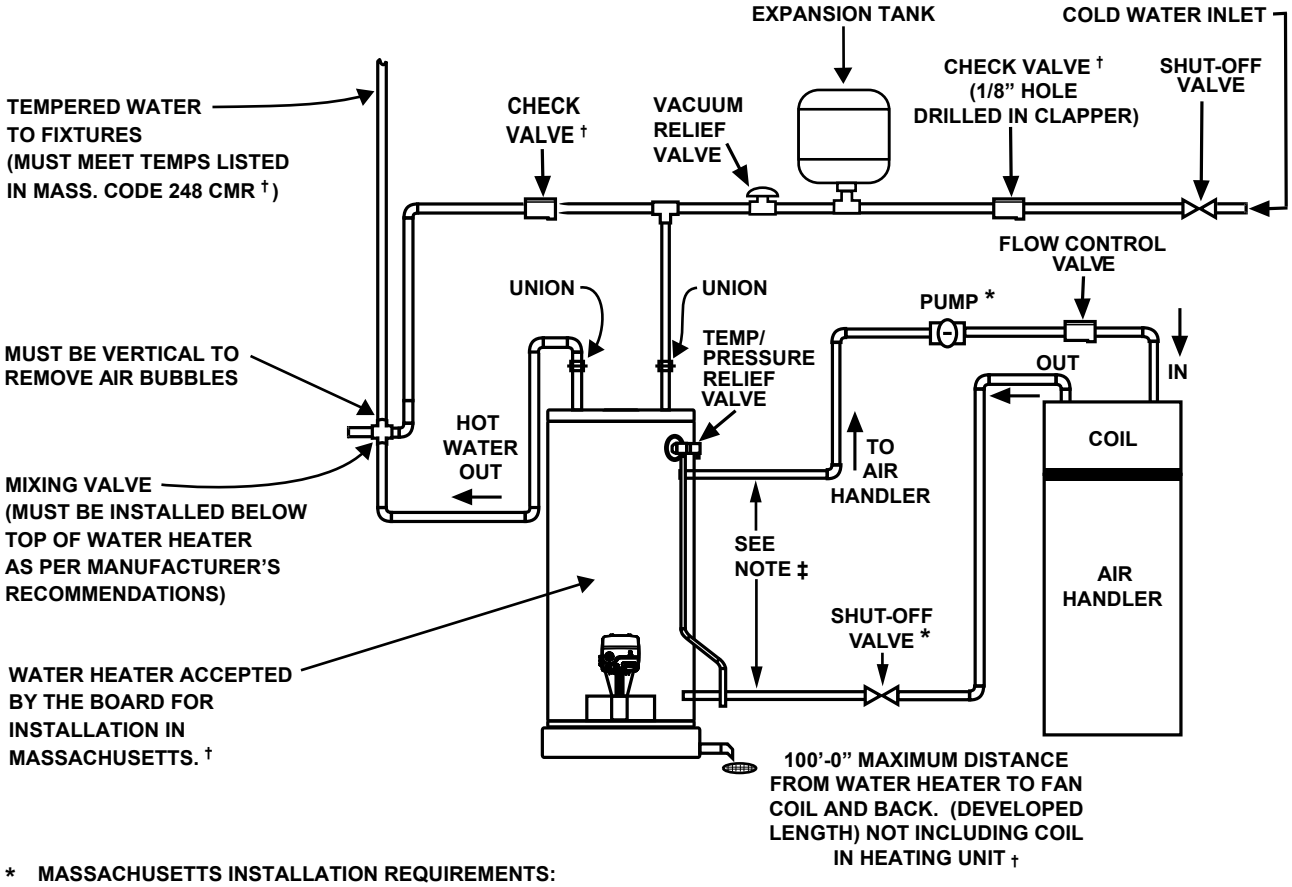

*** MASSACHUSETTS INSTALLATION REQUIREMENTS:**

1.) CONNECT ELECTRONICALLY-CONTROLLED TIMER TO AN ALL-BRONZE PUMP. PUMP MUST ACTIVATE EVERY 6 HOURS FOR 60 SECONDS. TURN PUMP TIMER OFF BEFORE CLOSING PIPING LOOP SHUT-OFF VALVE.

2.) ALL WATER PIPING MUST BE INSTALLED AND INSULATED IN ACCORDANCE WITH MASSACHUSETTS CODE (248 CMR & 780 CMR).

3.) PIPING LOOP BETWEEN WATER HEATER AND AIR HANDLER MUST BE INSTALLED IN COMPLIANCE WITH 248 CMR.

† REQUIRED FOR MASSACHUSETTS.

‡ PIPING FROM THE TOP OF THE WATER HEATER WITH TEES IS ACCEPTABLE.

TYPICAL INSTALLATION

GET TO KNOW YOUR WATER HEATER - GAS MODELS (LIST REFERENCING FIGURES 1-5)

1 Termination Elbow with Vent Screen
2 *Vent Pipe
3 *Vent Pipe Elbow (long radius)
4 *Union (Di-electric water connection)
5 Cold-Water Inlet Nipple/Diptube
6 **Combo Heating System Supply Outlet (Optional)
7 T&P Valve
8 *Discharge Pipe
9 **Combo Heating System Return Inlet (Optional)
10 Gas Control Valve/Thermostat (Honeywell)
11 Drain Valve
12 Outer Gas Door
13 Manifold Door Assembly (behind outer door) (see Figure 3 & Figure 4)
14 *Metal Drain Pan
15 *Floor Drain
16 Flexible Manifold Tube (see Figure 3 & Figure 4)
17 ***Control Harness
18 *Sediment Trap
19 *Ground Joint Union (gas connection)
20 *Main Manual Gas Shut-off Valve
21 *Gas Supply*
22 Anode (under cap)
23 Baffle Assembly
24 Hot-Water Outlet Nipple/Anode
25 *Inlet Water Shut-off Valve
26 ****Rubber Coupling (see Figure 5)
27 Gear Clamp (see Figure 5)
28 ***Blower with Power Cord (see Figure 5)
29 Air Duct Adapter
30 Air Inlet Snorkel
31 Air Duct
32 *Thermal Expansion Tank (see "Closed Water Systems" and "Thermal Expansion" sections)
33 Flame Sensor Rod (see Figure 3 & Figure 4)
34 Sheet Metal Burner (see Figure 3 & Figure 4)
35 Gas Orifice (see Figure 3 & Figure 4)
36 Gas Manifold (see Figure 3 & Figure 4)
37 Hot-Surface Igniter (see Figure 3 & Figure 4)
38 Manifold Door Gasket (see Figure 3 & Figure 4)
39 Manifold Door (see Figure 3 & Figure 4)
40 Two Piece Grommet With Clip (see Figure 3 & Figure 4)
41 Viewport (see Figure 3 & Figure 4)
42 Air Tubing (Intake) (see Figure 5)
43 Blower High Limit Switch (see Figure 5)
44 Intake Air Pressure Switch (NC) (inside box) (see Figure 5)
45 Capacitor (see Figure 5)
46 Air Tubing (Exhaust) (see Figure 5)
47 Exhaust Air Pressure Switch (NO) (inside box) (see Figure 5)

*, **, ***, **** see notes on following page

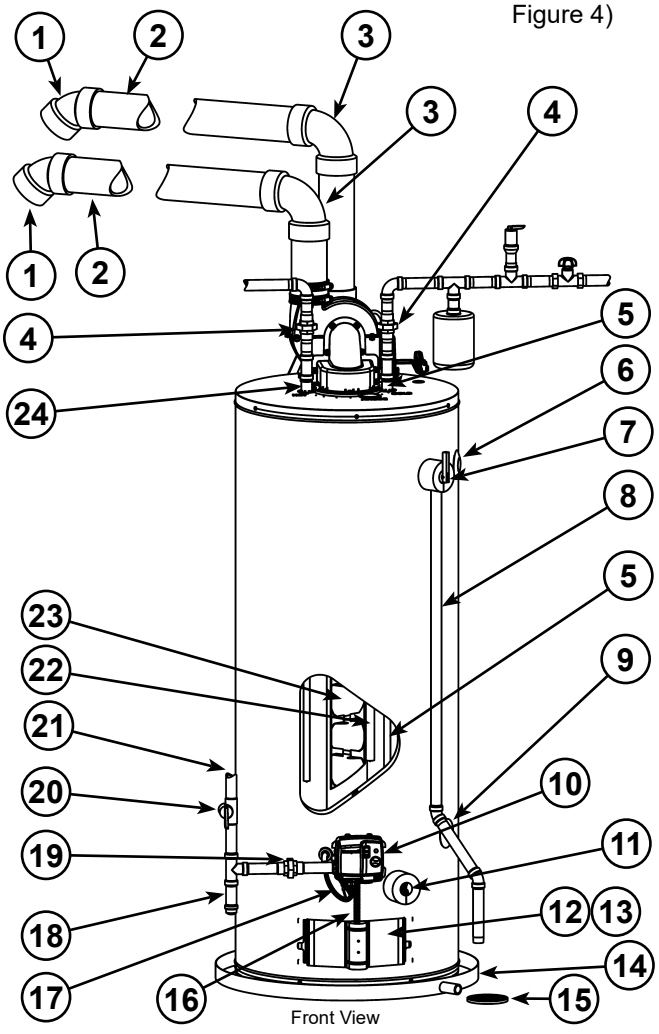

Front View

Figure 1.

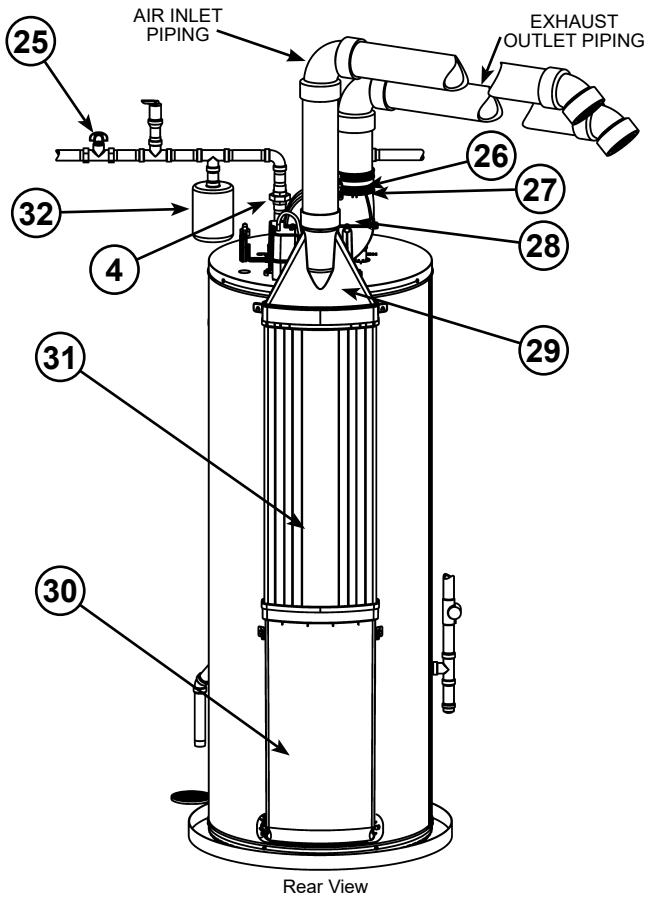

Rear View

Figure 2.

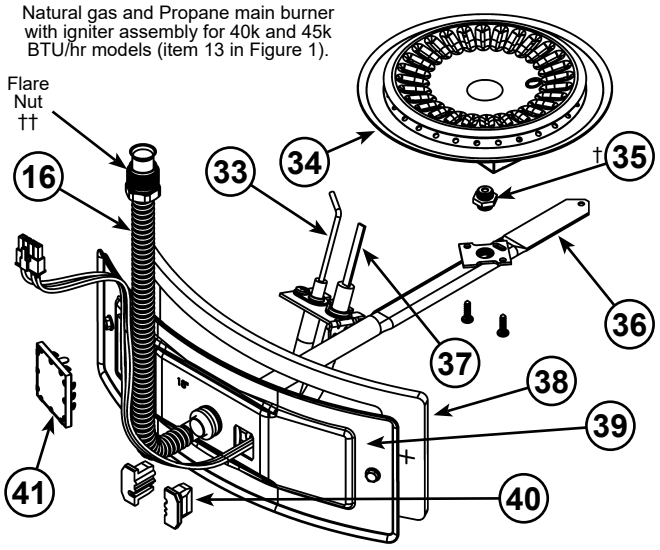

Figure 3.

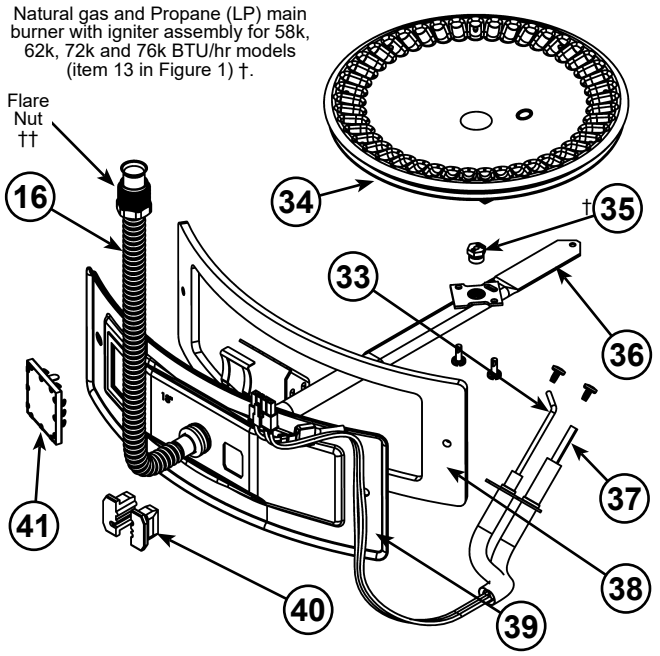

Figure 4.

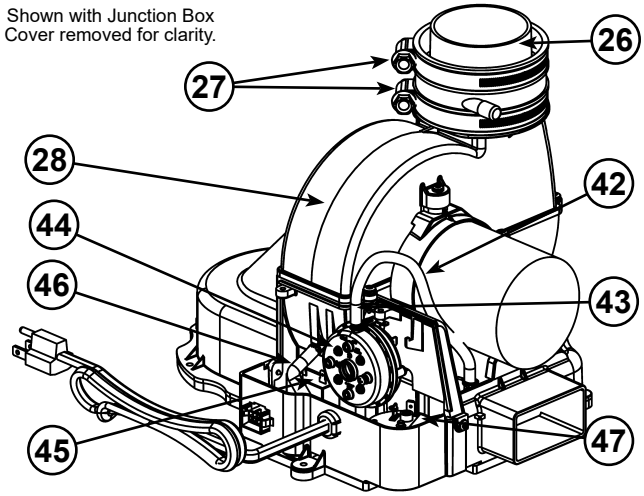

Figure 5.

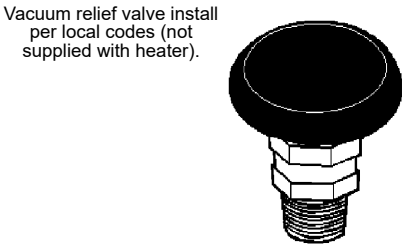

Figure 6.

Notes:

* Items not supplied with the water heater.

** The side recirculation loop connections may not be used as the primary water inlet and outlet connections. See "Combo Heating Inlet And Outlet Side Taps" below.

*** **Caution:** harness has 120 VAC during operation.

**** See "Vent Pipe Installation" for more information.

† The orifice on Natural gas models has Right-hand thread, the orifice on Propane (LP) models has Left-hand thread.

†† For Natural gas models the Flare Nut has Right-hand thread. For Propane (LP) models the Flare Nut has Left-hand thread.

REPLACEMENT PARTS AND DELIMING PRODUCTS

Replacement parts and recommended delimer may be ordered through authorized servicers or distributors. When ordering parts, provide complete model and serial numbers (see rating plate), quantity and name of part desired. Standard hardware items may be purchased locally.

COMBO HEATING INLET AND OUTLET SIDE TAPS

Models equipped with Combo Heating capabilities are shipped with the two side plumbing taps **OPEN** (item 6 and item 9 in Figure 1). See also Figure 7. If the heater is to be operated without using the side taps for combo heating, these openings **must be plugged** with the two pipe plugs supplied with the heaters.

WATER PIPING - MIXING VALVE USAGE

Mixing Valves

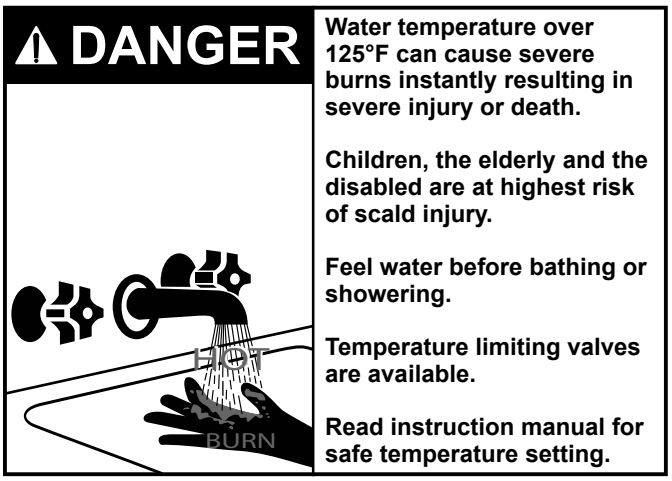

Water heated to a temperature which satisfies space heating, clothes washing, dish washing, and other sanitizing needs can scald and cause permanent injury upon contact. Short repeated heating cycles caused by small hot-water uses can cause a temperature increase of the hot water by 20F° higher than the heater's temperature settings.

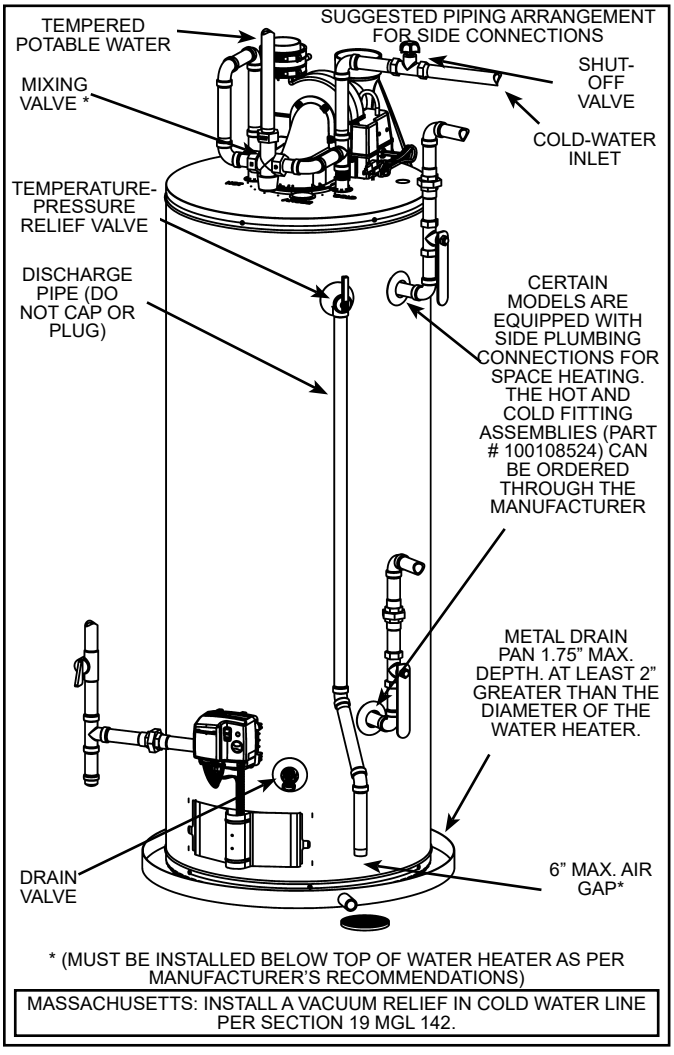

Figure 7.

This appliance has been design certified as complying with ANSI/CSA Standard for water heaters and are considered suitable for combination Water (Potable) Heating and Space Heating but not space heating only applications. The water supply pressure should not exceed 80 psi. If this occurs, a pressure reducing valve with a bypass should be installed in the cold water inlet line. This should be placed on the supply to the entire house in order to maintain equal hot and cold water pressures.

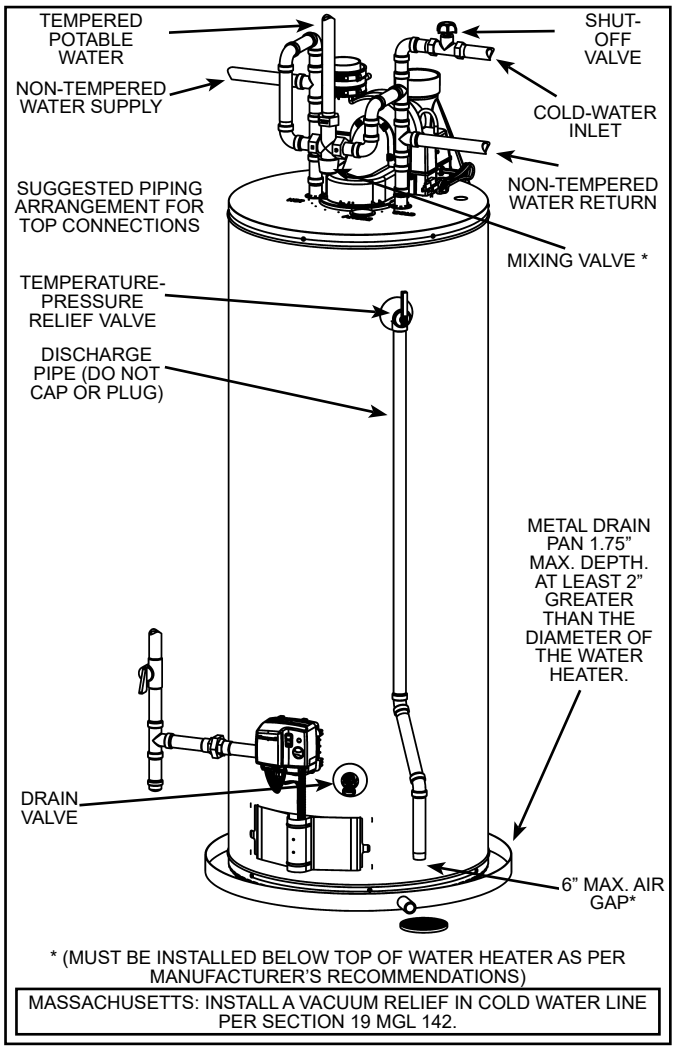

Figure 8.

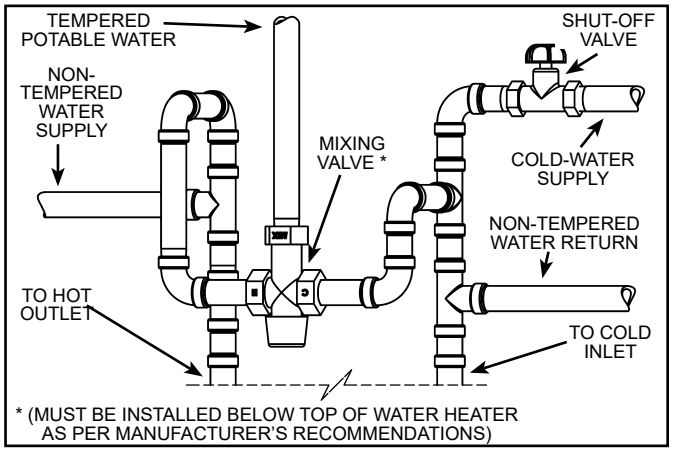

Figure 9.

Some people are more likely to be permanently injured by hot water than others. These include the elderly, children, the infirm and the physically/mentally disabled. Table 1 (published by U.S. Government Memorandum, 1978) shows the approximate time-to-burn relationship for normal adult skin. If anyone using hot water provided by the water heater being installed fits into one of these groups, special precautions must be taken.

Water Temperature °F	Time for 1st Degree Burns (Less Severe Burns)	Time for Permanent Burns 2nd & 3rd Degree (Most Severe Burns)
110	(normal shower temp.)	
116	(pain threshold)	
116	35 minutes	45 minutes
122	1 minute	5 minutes
131	5 seconds	25 seconds
140	2 seconds	5 seconds
149	1 second	2 seconds
154	instantaneous	1 seconds
(U.S. Government Memorandum, C.P.S.C., Peter L. Armstrong, Sept. 15,1978)		

Table 1.

In addition to using lowest possible temperature setting that satisfies demand of application, a mixing valve should be installed at water heater (see Figure 7 and Figure 8) or at hot-water taps to further reduce system water temperature.

Mixing valves are available at plumbing supply stores. Consult a Qualified Installer or Service Agency. Follow mixing valve manufacturer's instructions for installation of the valves. Before changing the factory setting on the thermostat, read the "Operating The Temperature Control System" section in this manual.

WATER HEATER OPERATION

Figure 10 shows the water heater's sequence of operation when a call for heat is initiated. The ignition control module will attempt to light the burner three times. If the ignition control does not detect ignition it will enter lockout mode and flash the corresponding error code.

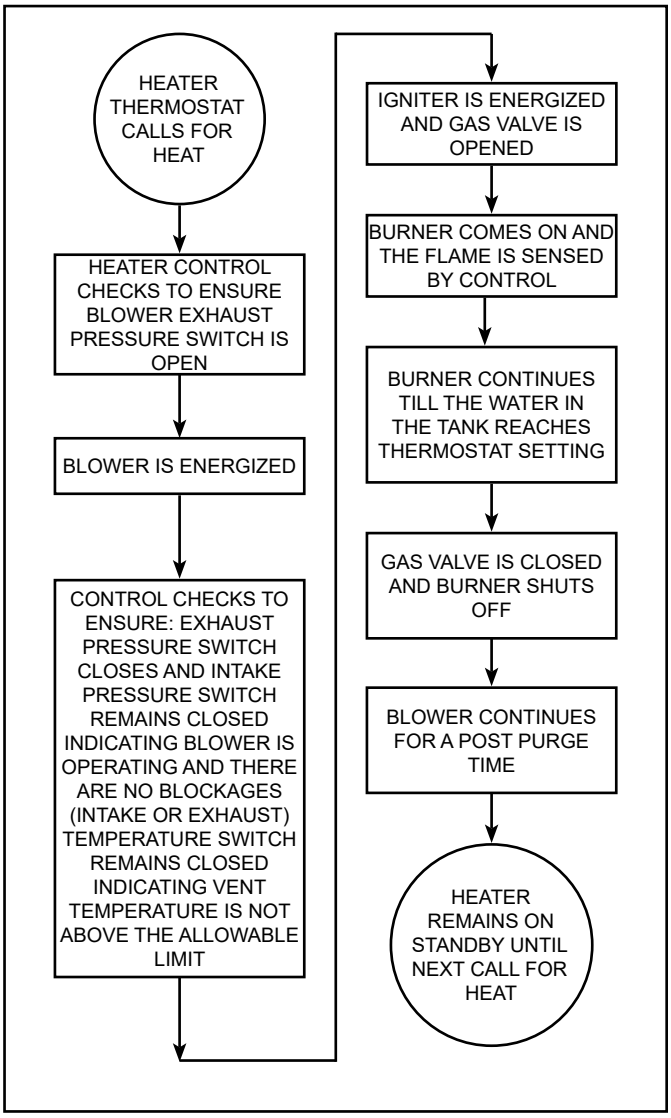

Figure 10.

ELECTRICAL REQUIREMENTS & WIRING DIAGRAM

⚠WARNING



Electric Shock Hazard

Disconnect power before servicing.

Replace all parts and panels before operating.

Failure to do so can result in death or electrical shock.

Before plugging in the water heater, always make sure:

- The voltage and frequency correspond to that specified on the water heater wiring diagram.
- The electrical outlet has the proper overload fuse or breaker protection.

1. The unit must be connected to a 120VAC power supply. A dedicated circuit is preferred. Do not use a GFI outlet.
2. The water heater must be properly grounded.
3. This water heater is a polarity sensitive appliance and will not operate if the power supply polarity is reversed.

Note: Always reference the wiring diagram for the correct electrical connections.

After making all electrical connections, completely fill the tank with water and check all connections for leaks. Open the nearest hot-water faucet and let it run for 3 minutes to purge the water lines of air and sediment and to ensure complete filling of the tank. The electrical power may then be turned on. Verify proper operation after servicing. See also "Installation Checklist".

CAUTION:
LABEL ALL WIRES PRIOR TO DISCONNECTION WHEN SERVICING CONTROLS. WIRING ERRORS CAN CAUSE IMPROPER AND DANGEROUS OPERATION. VERIFY PROPER OPERATION AFTER SERVICING.

NOTE: REFER TO THE "INSTALLATION CHECKLIST" BEFORE OPERATING THIS HEATER.

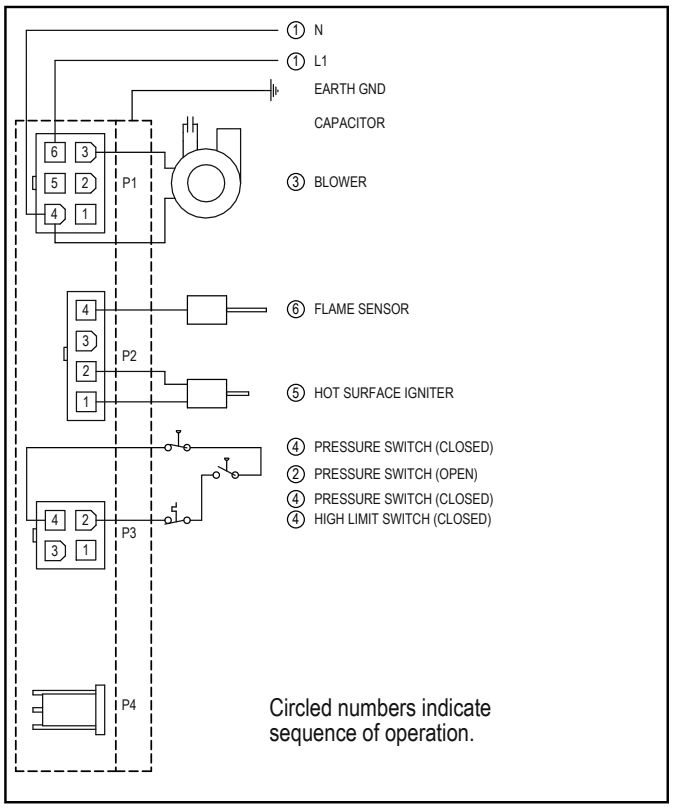

Figure 12.

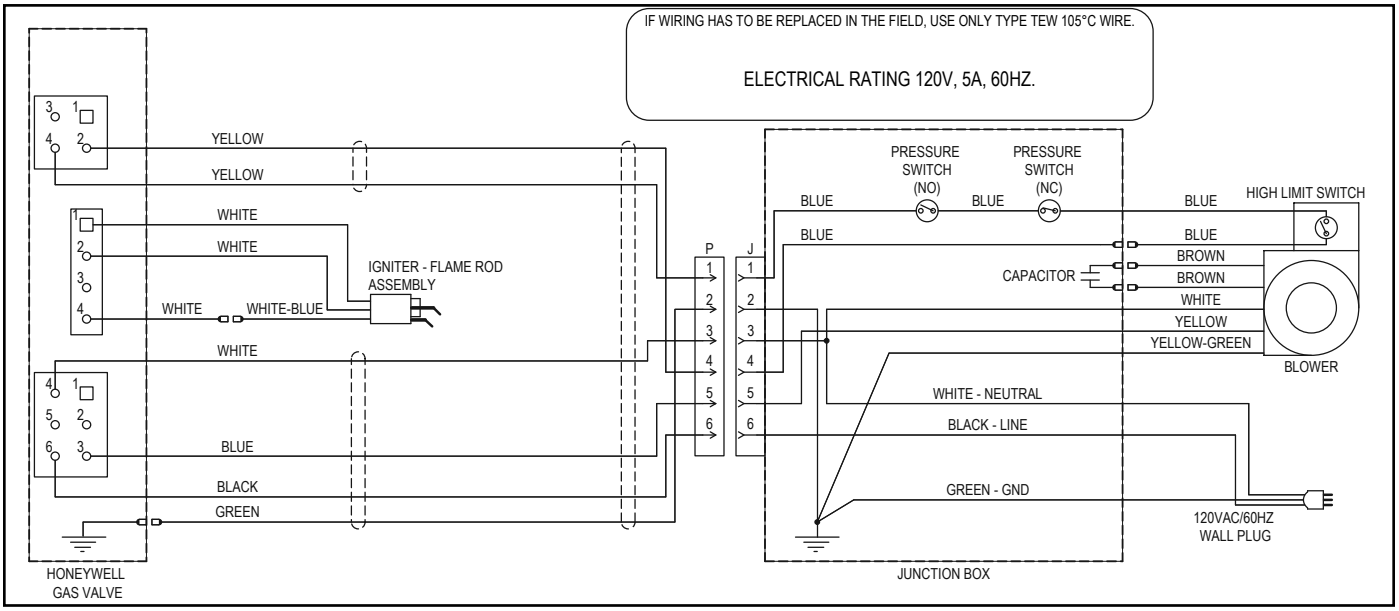

Figure 11.

SAFETY LOCKOUTS

This water heater has several lockout features designed to prevent the heater from operating in unsafe conditions.

HIGH LIMIT CONTROLS (ENERGY CUT OFF)

Thermostat/Water Temperature

This feature is a part of the gas control valve/thermostat (see Figure 1, item 9) and limits the maximum water temperature. In the event of the water overheating, this safety feature shuts off the fuel supply to the burner.

Blower High Limit Switch

This device is located on the blower (see Figure 5, item 43) and limits the maximum temperature of the blower. If the blower temperature rises above the temperature setting, the switch opens causing the heater to shut down. The switch will auto reset once the temperature drops sufficiently.

BLOWER AIR PRESSURE SWITCHES

The blower/heater is equipped with two air pressure switches located in the junction box (see Figure 5, item 44 and item 47). These devices are connected in series and monitor the air pressure produced by the blower. In the event that the exhaust venting becomes blocked or sufficiently restricted, the normally open (NO) air pressure switch will shut down the heater. In the event that the intake pipe becomes sufficiently blocked or restricted, the normally closed (NC) air pressure switch will shut down the heater.

LOCATING THE NEW WATER HEATER

FACTS TO CONSIDER ABOUT THE LOCATION

Carefully choose an indoor location for the new water heater because the placement is a very important consideration for the safety of the occupants in the building and for the most economical use of the appliance. This water heater is not for use in manufactured (mobile) homes or outdoor installation.

Whether replacing an old water heater or putting the water heater in a new location, the following critical points must be observed:

1. Select a location indoors as close as practical to the vent termination or location to which the water heater vent piping is going to be connected, and as centralized with the water piping system as possible.
2. Selected location must provide adequate clearances for servicing and proper operation of the water heater.
3. Avoid locations that could cause the water heater to freeze from outside air.
4. Selected location must provide access to a properly grounded electrical branch circuit. A dedicated circuit is preferred. Do not use a GFI outlet.
5. Avoid locations that expose the water heater to direct sunlight.
6. Keep combustibles such as boxes, magazines, clothes, etc., away from the water heater area.

Important: Do not use an extension cord to connect the water heater to an electrical outlet.

CAUTION

Property Damage Hazard

- All water heaters eventually leak.
- Do not install without adequate drainage.

Installation of the water heater must be accomplished in such a manner that if the tank or any connections should leak, the flow of water will not cause damage to the structure. For this reason it is not advisable to install the water heater in an attic or upper floor. In all cases, a metal drain pan should be installed under the water heater. Metal drain pans are available at your local hardware store. Such a metal drain pan must have a clearance of at least 1" greater than any point on the water heater's outer jacket and must be piped to an adequate drain. The pan must have a maximum depth of 1.75".

Water heater life depends upon water quality, water pressure and the environment in which the water heater is installed. Water heaters are sometimes installed in locations where leakage may result in property damage, even with the use of a metal drain pan piped to a drain. However, unanticipated damage can be reduced or prevented by a leak detector or water shut-off device used in conjunction with a piped metal drain pan. These devices are available from some plumbing supply wholesalers and retailers, and detect and react to leakage in various ways:

- Sensors mounted in the metal drain pan that trigger an alarm or turn off the incoming water to the water heater when leakage is detected.
- Sensors mounted in the metal drain pan that turn off the water supply to the entire building when water is detected in the metal drain pan.
- Water supply shut-off devices that activate based on the water pressure differential between the cold-water and hot-water pipes connected to the water heater.
- Devices that will turn off the gas supply to a gas water heater while at the same time shutting off its water supply.

⚠ WARNING

Fire or Explosion Hazard

- Do not store or use gasoline or other flammable vapors and liquids in the vicinity of this or any other appliance.
- Avoid all ignition sources if you smell gas.
- Do not expose water heater control to excessive gas pressure.
- Use only gas shown on rating plate.
- Maintain required clearances to combustibles.
- Keep ignition sources away from faucets after extended period of non-use.



Read instruction manual before installing, using or servicing water heater.



⚠ WARNING

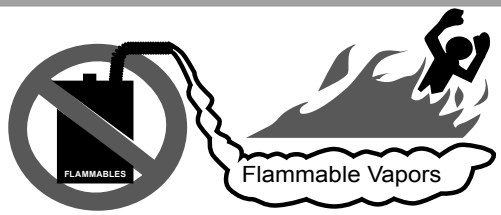

FIRE AND EXPLOSION HAZARD
Can result in serious injury or death

Do not store or use gasoline or other flammable vapors and liquids in the vicinity of this or any other appliance. Storage or use of gasoline or other flammable vapors or liquids in the vicinity of this or any other appliance can result in serious injury or death.



⚠ WARNING

Fire Hazard

For continued protection against risk of fire:

- Do not install water heater on carpeted floor.
- Do not operate water heater if flood damaged.

Clearances To Combustibles

Minimum clearances between water heater and combustibles are 0” at the sides and rear, 5.5” from the front and 12” from top (standard clearance.) If clearances stated on the heater differ from standard clearances, install water heater according to clearances stated on the heater (see Figure 13).

Floors With Carpeting

This water heater must not be installed directly on carpeting. Carpeting must be protected by a metal or wood panel beneath the appliance extending beyond the full width and depth of the appliance by at least 3” in every direction, or if the appliance is installed in an alcove or closet, the entire floor must be covered by the panel. Failure to heed this warning may result in a fire hazard.

Clearances For Servicing

When installing the heater, consideration must be given to proper location. Location selected should be as close to the wall as practicable and as centralized with the water piping system as possible.

Servicing this appliance, such as changing the anodes, etc. requires clearances for accessibility and replacement of parts. The anode could be as long as 35”.

Refer to the current edition of the **“National Fuel Gas Code”, ANSI Z223.1/NFPA 54** for detailed requirements.

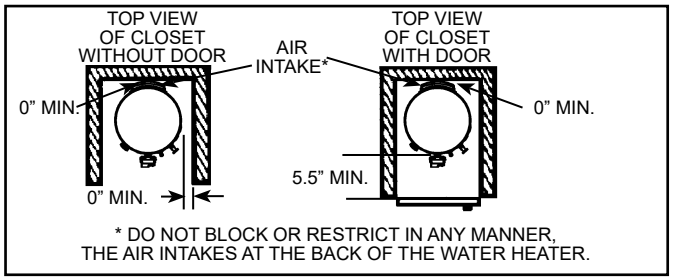

Figure 13.

⚠ WARNING

Breathing Hazard - Carbon Monoxide Gas

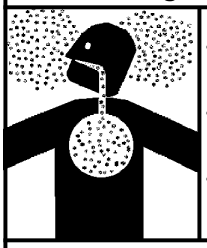

- **Install water heater in accordance with the instruction manual and NFPA 54.**
- **To avoid injury, combustion and ventilation air must be taken from outdoors.**
- **Do not place chemical vapor emitting products near water heater.**

Breathing carbon monoxide can cause brain damage or death. Always read and understand instruction manual.

HIGH AMBIENT TEMPERATURE INSTALLATIONS

As the room temperature rises, the water heater venting is exposed to high temperatures from the inside and the outside. In these situations, attention to the choice of venting material is necessary. Establishing the ambient temperatures where the heater and the venting are installed is very important. Areas that can experience high ambient environments include closets, alcoves, areas under staircases, attics (especially in metal roofed buildings), areas with restricted air movement, rooms with large solar gains, metal sheds, industrial or commercial enterprises and venting systems exposed to direct sunlight. Water heater installations in ambient conditions hotter than 110°F require the installation of a high ambient limit switch (kit number 100308923) and use of CPVC or polypropylene venting material. Failure to install the proper vent material will result in a non-compliant installation and can result in deformation/breakage of the pipe.

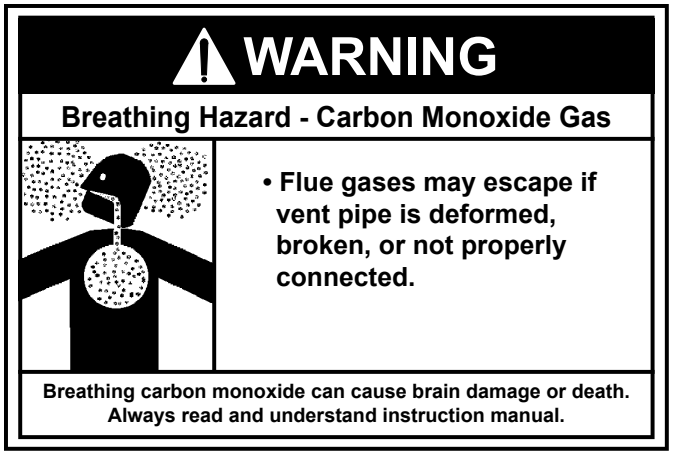

Important Notes and Warnings

- This heater is certified to be installed using Schedule 40 PVC or CPVC or polypropylene plastic vent material. Only use approved material. All venting material and components must be joined with the approved primer/ cleaner and solvent cement.
- Do not common vent this heater with any other appliance.
- During operation the plastic piping will expand as it heats up and contract as it cools down. This is normal for this type of venting. Rigidly fastening the vent piping can cause undue stress that may result in the cracking or fracturing the vent piping material. A fracture of the venting pipe may pose a serious safety hazard. To prevent stressing of the vent system, all hangers and supports must allow the vent piping freedom to move.
- Use long sweep elbows wherever possible. Closely coupled elbows and short radius elbows can reduce the venting capacity.
- All power vented water heaters generate a certain amount of operational noise. In order to minimize noise transmission to the support structure, it is recommended to use isolation pads between the pipe hangers and the vent pipe.
- Most power vent installations develop some condensation in the vent piping. When using long runs of venting or when the venting passes through cold or unheated areas, considerable amounts of condensate from the flue gases can develop. Provision must be made for the condensate to drain freely from the system or to be collected in a condensate trap(s) that can be drained. Damage or fracture of the vent piping may occur if the condensate is allowed to collect and freeze. Pooling of condensate can restrict airflow and can cause nuisance failures of the system.

INSULATION BLANKETS

Insulation blankets are available to the general public for external use on gas water heaters but are not necessary with these products. The purpose of an insulation blanket is to reduce standby heat loss encountered with storage tank heaters. Your water heater meets or exceeds the current standards with respect to insulation and standby loss requirements, making an insulation blanket unnecessary. Should you choose to apply an insulation blanket to this heater, you should follow these instructions (For identification of components mentioned below, see Figure 1 thru Figure 6). Failure to follow these instructions will restrict the air flow required for proper combustion and dilution, potentially resulting in fire, asphyxiation, serious personal injury or death.

- Do not apply insulation to the top of the water heater, as this will interfere with safe operation of the blower assembly.
- Do not cover the outer door, thermostat or T&P relief valve.
- Do not cover the “Installation And Operating manual”. Keep it on the side of the water heater or nearby for future reference.
- Do obtain new warning and instruction labels from the manufacturer for placement on the blanket directly over the existing labels.
- Do inspect the insulation blanket frequently to make certain it does not sag, thereby obstructing combustion air flow.

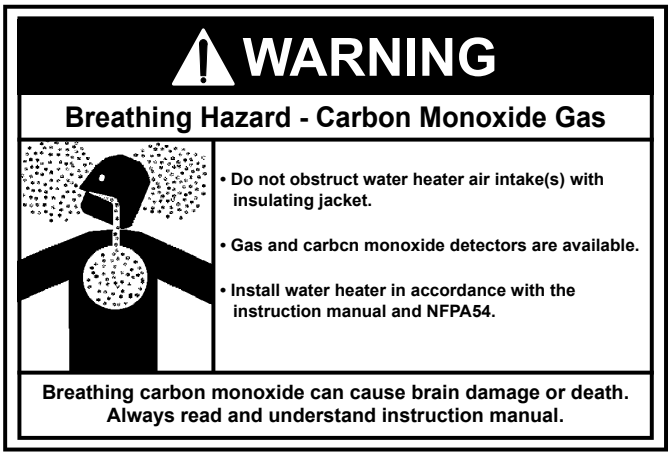

AIR REQUIREMENTS

For safe operation an adequate supply of fresh, uncontaminated air for combustion, dilution and ventilation must be provided.

Note: Contaminated or dusty air may cause build-up on the blower wheel resulting in nuisance shut downs.

INSTALLING THE NEW WATER HEATER

WATER PIPING

⚠ DANGER

Water temperature over 125°F can cause severe burns instantly resulting in severe injury or death.

Children, the elderly and the disabled are at highest risk of scald injury.

Feel water before bathing or showering.

Temperature limiting devices such as mixing valves must be installed when required by codes and to ensure safe temperatures at fixtures.

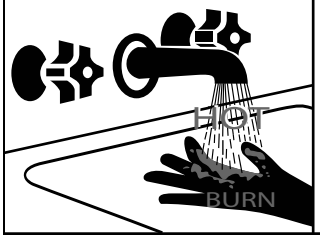

The water supply pressure should not exceed 80 psi. If this occurs, a pressure reducing valve with a bypass should be installed in the cold water inlet line. This should be placed on the supply to the entire house in order to maintain equal hot and cold water pressures.

HOT WATER CAN SCALD:
Water heaters are intended to produce hot water. Water heated to a temperature which will satisfy space heating, clothes washing, dish washing, cleaning and other sanitizing needs can scald and permanently injure you upon contact. Some people are more likely to be permanently injured by hot water than others. These include the elderly, children, the infirm, or physically/ mentally handicapped. If anyone using hot water fits into one of these groups or if there is a local code or state law requiring certain temperature water at the hot-water tap, then you must take special precautions. In addition to using lowest possible temperature setting that satisfies your hot water needs, a means such as a mixing valve, should be used at hot-water taps used by these people or at the water heater (see Figure 7 and Figure 8). Valves for reducing point of use temperature by mixing cold and hot water are also available.

SPACE HEATING AND POTABLE WATER SYSTEMS

This appliance has been design certified as complying with American National Standard/CSA Standard for water heaters and is suitable for combination water (potable) heating and space heating but not space heating only applications.

⚠ WARNING

Toxic Chemical Hazard

- Do not connect to non-potable water system.

Consult a Qualified Installer or Service Agency. Follow manufacturer's instructions for installation of valves. Before changing the factory setting on thermostat, read "Operating The Temperature Control System" section in this manual.

- This water heater should not be connected to any heating systems or components previously used with a non-potable water heating appliance.
- All piping components connected to this unit for space heating applications should be suitable for use with potable water.
- Toxic chemicals, such as those used for boiler treatment shall not be introduced into the potable water used for space heating.
- When the system requires water for space heating at temperatures higher than required for domestic water purposes, a mixing valve must be installed. Please refer to Figure 7 and Figure 8 for suggested piping arrangement.

Note: Water piping and vent piping occupy the space above the water heater. Plan the water piping to ensure it does not cause interference with the vent piping (see "Planning the Vent System").

If this water heater is to be used to supply both space heating and potable water, the instructions listed below must be followed:

- Be sure to follow the manual(s) shipped with the air handler or other type heating system.
- This water heater is not to be used as a replacement for an existing boiler installation.
- Do not use with piping that has been treated with chromates, boiler seal or other chemicals and do not add any chemicals to the water heater piping.
- If the space heating system requires water temperatures in excess of 120°F, steps must be taken to limit temperatures at fixtures in the potable hot-water supply for safety and regulatory requirements.
- Pumps, valves, piping and fittings must be compatible with potable water.
- A properly installed flow control valve is required to prevent thermosiphoning. Thermosiphoning is the result of a continuous flow of water through the air handler circuit during the off cycle. Weeping (blow off) of the temperature-pressure relief valve (T&P) or higher than normal water temperatures are the first signs of thermosiphoning.
- The hot-water line from the water heater should be vertical past any mixing valve or supply line to the heating system to remove air bubbles from the system.
- Do not connect the water heater to any system or components previously used with non-potable water heating appliances when used to supply potable water.

COMBO HEATING

This section serves as a guide for the installation and use of “Combo” heating systems utilizing a domestic water heater that has been specifically approved for such use. It is written for those knowledgeable in the required trades and professionals involved in the design and installation of Combo Heating Systems.

It is the responsibility of the installer/designer to follow all applicable codes to ensure the effectiveness and safety of the installation.

System Requirements

The following requirements must be met for the installation of Combo Heating Systems:

1. All components used for the distribution of water in the heating loop must be suitable for potable water. These include all piping, fittings, solder and fluxes, pumps for circulation of water, valves, etc.
2. The water heater must not be connected to a hydronic heating system that has been used previously.
3. No boiler treatment chemicals of any kind shall be introduced into the system.
4. The Combo System components must be selected and sized to meet and maintain the total calculated demands for both domestic service hot water and space heating requirement. The sizing and installation must be performed in accordance with good engineering practice such as **“ASHRAE Handbooks”, HRAI’s Unified Combo Guidelines, “Hydronics Institute Manuals”, ANSI Z223.1, CSA F280, National/Provincial Building Codes**, ANSI and/or codes having jurisdiction.
5. The air handler (fan coil) and/or the circulating pump in a baseboard hydronic loop will require a dedicated 120V circuit. This must be provided and identified for this purpose.
6. All piping between the water heater and the air handler or hydronic baseboard loop must be adequately insulated to reduce heat loss.
7. If the local jurisdiction requires a back-flow preventer in the cold water line, an expansion tank of adequate size must be installed.
8. “Combo” Heating Systems require higher water temperatures than other applications. When the system is used to supply water for Combo Heating applications, a means, such as mixing valve, must be installed to temper the water in order to reduce scald hazard potential (see Figure 14 and Figure 15).

Installation

The heating mode may be one of the following options:

A. A fan coil/air handler (Figure 14).
B. A hydronic baseboard (finned tube) loop/In floor heating (Figure 15).

The following is a list of requirements for the installation of option A or B.

1. Install shut-off valves and unions so that the water heater can be isolated from the heating module should servicing of the water heater become necessary.
2. Install a drain valve at the lowest point of the heating loop so that water can be drained from the heating module without affecting the water heater.
3. If the air handler does not have a venting means at the highest point of the piping arrangement, install an air bleed at the highest point of the plumbing arrangement.
4. **Important:** Install a spring loaded check valve in the side tap return line to prevent cold water from continuously entering the water heater. Failure to install such a valve could cause “stacking” and cause the T&P valve to open.

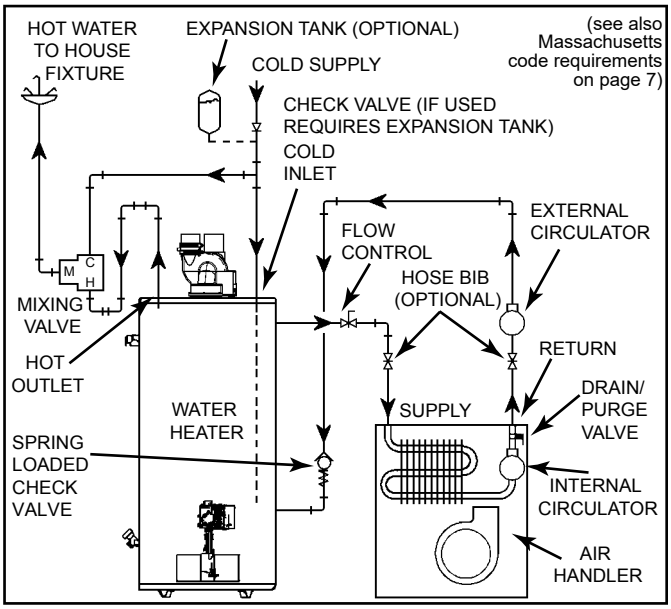

Figure 14.

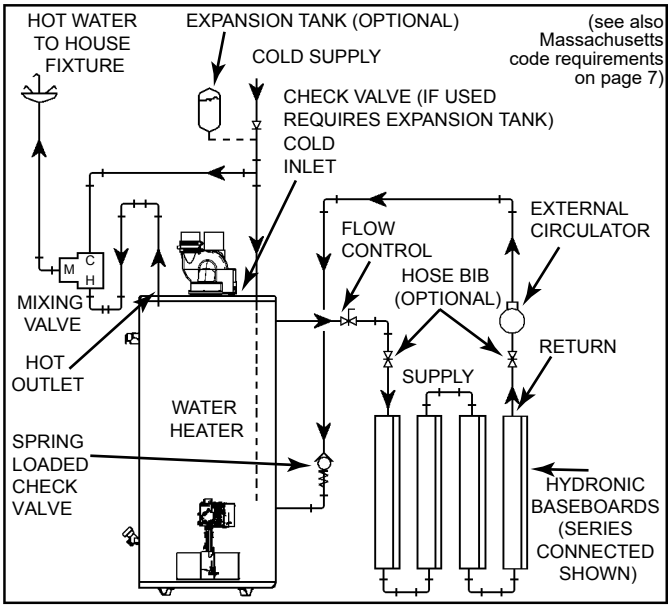

Figure 15.

CLOSED WATER SYSTEMS

Water supply systems may, because of code requirements or such conditions as high line pressure, among others, have installed devices such as pressure-reducing valves, check valves, and back flow preventers. Devices such as these cause the water system to be a closed system.

THERMAL EXPANSION

As water is heated, it expands (thermal expansion). In a closed system, the volume of water will increase. As the volume of water increases, there will be a corresponding increase in water pressure due to thermal expansion. Thermal expansion can cause premature tank failure (leakage). This type of failure is not covered under the limited warranty. Thermal expansion can also cause intermittent temperature-pressure relief valve operation: water discharged from the valve due to excessive pressure build up. The temperature-pressure relief valve is not intended for the constant relief of thermal expansion. This condition is not covered under the limited warranty.

A properly-sized thermal expansion tank should be installed on all closed systems to control the harmful effects of thermal expansion. Contact a plumbing service agency or your retail supplier regarding the installation of a thermal expansion tank.

Note: To protect against untimely corrosion of hot and cold water fittings, it is recommended that di-electric unions or couplings be installed on this water heater when connected to copper pipe.

CAUTION

Property Damage Hazard

- Avoid water heater damage.
- Install thermal expansion tank if necessary.
- Do not apply heat to cold water inlet.
- Contact qualified installer or service agency.

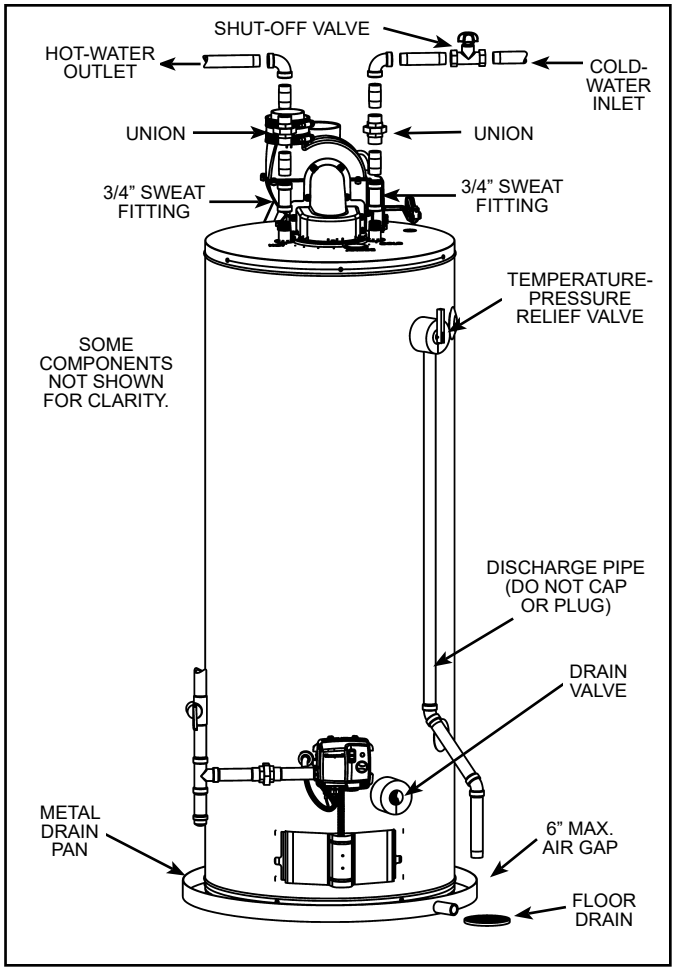

Figure 16.

Figure 16 shows typical attachment of water piping to the water heater. The water heater is equipped with 3/4" NPT water connections.

Note: If using copper tubing, solder tubing to an adapter before attaching the adapter to the water heater connections. Do not solder the water lines directly to the water heater connections - it will harm the dip tube and heat traps and damage the tank.

TEMPERATURE-PRESSURE RELIEF VALVE

⚠ WARNING

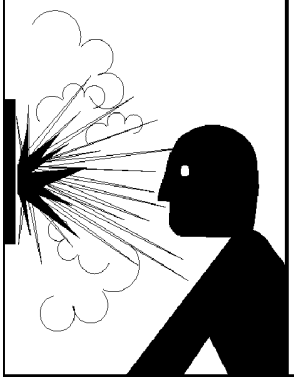

Explosion Hazard

- Temperature-pressure relief valve must comply with ANSI Z21.22-CSA4.4 and ASME code.
- Properly sized temperature-pressure relief valve must be installed in opening provided.
- Do not plug, block, or cap the discharge line.
- Failure to follow this warning can result in excessive tank pressure, serious injury or death.

This water heater is provided with a properly rated/sized and certified combination Temperature-Pressure Relief Valve (T&P valve) by the manufacturer. The valve is certified by a nationally recognized testing laboratory that maintains periodic inspection of production of listed equipment of materials as meeting the requirements for **Relief Valves for Hot Water Supply Systems, ANSI Z21.22-CSA 4.4**, and the code requirements of ASME.

If replaced, the new T&P valve must meet the requirements of local codes, but not less than a combination temperature-pressure relief valve rated/sized and certified as indicated in the above paragraph. The new valve must be marked with a maximum set pressure not to exceed the marked hydrostatic working pressure of the water heater (150 psi) and a discharge capacity not less than the water heater BTU/hr input rate as shown on the water heater's model rating plate.

For safe operation of the water heater, the temperature-pressure relief valve must not be removed from its designated opening nor plugged. The T&P valve must be installed directly into the fitting of the water heater designed for the relief valve. Install discharge piping so that any discharge will exit the pipe within 6" above an adequate floor drain. Be certain that no contact is made with any live electrical part.

The discharge opening must not be blocked or reduced in size under any circumstances. Excessive length (over 30'), or use of more than four elbows can cause restriction and reduce the discharge capacity of the valve.

No valve or other obstruction is to be placed between the T&P valve and the tank. Do not connect discharge piping directly to the drain unless a maximum of 6" air gap is provided. To prevent bodily injury, hazard to life, or property damage, the relief valve must be allowed to discharge water in adequate quantities should circumstances demand. If the discharge pipe is not connected to a drain or other suitable means, the water flow may cause property damage.

CAUTION

Water Damage Hazard

- Temperature-pressure relief valve discharge pipe must terminate at an adequate drain.

T&P Valve Discharge Pipe Requirements:

- Must not be smaller than the pipe size of the relief valve or have any reducing coupling installed in the discharge line.
- Must not be capped, blocked, plugged or contain any valve between the relief valve and the end of the discharge line.
- Must terminate a maximum of six inches above a floor drain or external to the building. In cold climates, it is recommended that the discharge pipe be terminated at an adequate drain inside the building.
- Must be capable of withstanding 250°F without distortion.
- Must be installed to allow complete drainage of both the valve and discharge line.

⚠ DANGER

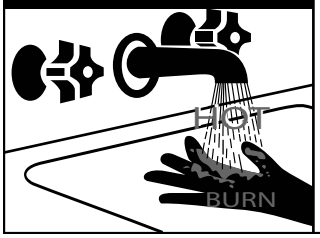

- Burn hazard.
- Hot water discharge.
- Keep clear of temperature-pressure relief valve discharge.

It is recommended to manually operate the T&P valve at least once a year. Caution should be taken to ensure (1) no one is in front of or around the outlet of the discharge line, and (2) the water manually discharged will not cause any bodily injury or property damage because the water may be extremely hot. If after manually operating the valve, it fails to completely reset and continues to release water, immediately close the cold-water inlet to the water heater, follow the draining instructions in this manual, and replace the temperature-pressure relief valve with a properly rated/sized new one.

Note: The purpose of a temperature-pressure relief valve is to prevent excessive temperatures and pressures in the storage tank. The T&P valve is not intended for the constant relief of thermal expansion. A properly sized thermal expansion tank must be installed on all closed systems to control thermal expansion, see "Closed Water Systems" and "Thermal Expansion" sections.

Temperature-Pressure Relief Valve And Pipe Insulation

The T&P valve installed on this water heater is covered by insulation to minimize heat loss. The insulation has a hole on the bottom side to accommodate the valve outlet and allow for the piping connection. Do not restrict the outlet opening of the T&P valve.

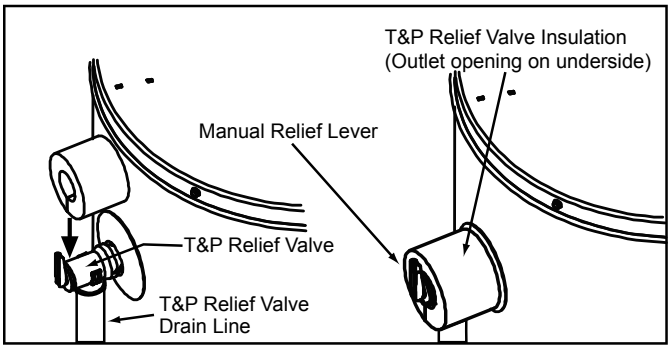

Figure 17.

Locate the temperature and pressure relief valve on the water heater (also known as a T&P relief valve). See Figure 17.

1. Locate the slit running the length of the T&P relief valve insulation.
2. Spread the slit open and fit the insulation over the T&P relief valve. See Figure 17. Apply gentle pressure to the insulation to ensure it is fully seated on the T&P Relief Valve. Once seated, secure the insulation with duct tape, electrical tape, or equivalent. **Important:** The insulation and tape must not block the discharge opening or hinder access to the manual relief lever (Figure 17). Ensure a discharge pipe is installed into the T&P valve discharge opening per the instructions in this manual.
3. Locate the hot water (outlet) and cold water (inlet) pipes to the water heater.
4. Locate the slit running the length of a section of pipe insulation.
5. Spread the slit open and slip the insulation over the cold water (inlet) pipe. Apply gentle pressure along the length of the insulation to ensure it is fully seated around the pipe. Also, ensure the base of the insulation is flush with the water heater. Once seated, secure the insulation with duct tape, electrical tape, or equivalent.
6. Repeat steps 4 and 5 for the hot water (outlet) pipe.
7. Add additional sections of pipe insulation as needed.

HIGH ALTITUDE INSTALLATION

⚠ WARNING

Breathing Hazard - Carbon Monoxide Gas

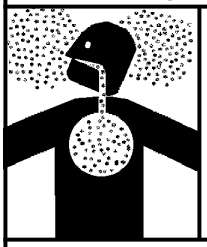

- For operation above 10,100 ft. a high altitude orifice must be installed.
- Contact a qualified installer or service agency.

Breathing carbon monoxide can cause brain damage or death. Always read and understand instruction manual.

This heater is approved for operation up to 10,100' without alteration.

Failure to replace standard orifice with a high altitude orifice when installed above 10,100' could result in improper and inefficient operation of the appliance, producing carbon monoxide gas in excess of safe limits, which could result in serious injury or death. Contact your gas supplier for any specific changes which may be required in your area.

GAS PIPING

⚠ WARNING



Fire and Explosion Hazard

- Do not use water heater with any gas other than the gas shown on the rating plate.
- Excessive pressure to gas control valve can cause serious injury or death.
- Turn off gas lines during installation.
- Contact qualified installer or service agency.

⚠ WARNING



Explosion Hazard

Have a qualified technician make sure that the L.P. gas operating pressure does not exceed 13" water column.

Failure to do so can result in death, explosion, or fire.

Make sure the gas supplied is the same type listed on the model rating plate. The inlet gas pressure must not exceed 14" w.c. for natural gas and propane gas. The minimum inlet gas pressure shown on the rating plate is that which will permit firing at rated input.

All gas piping must comply with local codes and ordinances or with the **"National Fuel Gas Code", ANSI Z223.1/ NFPA 54**. Copper or brass tubing and fittings (except tin lined copper tubing) should not be used.

If the gas control valve/thermostat is subjected to pressures exceeding 1/2 psi, the damage to the gas control valve/thermostat could result in a fire or explosion from leaking gas.

If the main gas line shut-off serving all gas appliances is used, also turn "OFF" the gas at each appliance. Leave all gas appliances shut "OFF" until the water heater installation is complete.

A gas line of sufficient size must be run to the water heater. Consult the current edition of **"National Fuel Gas Code", ANSI Z223.1/NFPA 54** and your gas supplier concerning pipe size.

There must be:

- A readily accessible manual shut-off valve in the gas supply line serving the water heater, and
- A sediment trap ahead of gas control valve/thermostat to help prevent dirt and foreign materials from entering the gas control valve/thermostat.
- A flexible gas connector or a ground joint union between the shut-off valve and gas control valve/thermostat to permit servicing of the unit.

Be sure to check all the gas piping for leaks before lighting the water heater. Use a soapy water solution, not a match or open flame. Repair and retest as required. When finished, rinse off soapy solution and wipe dry.

⚠ WARNING

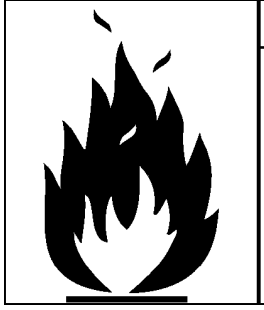

Fire and Explosion Hazard

- Use joint compound or tape compatible with natural gas and propane.
- Leak test before operating heater.
- Disconnect gas piping and shut-off valve before pressure testing system.

Use pipe joint compound or Teflon® tape marked as being resistant to the action of gases.

The appliance and its gas connection must be leak tested before placing the appliance in operation.

The appliance and its individual shut-off valve should be disconnected from the gas supply piping system during any pressure testing of that system at test pressures in excess of 1/2 psi. It should be isolated from the gas supply piping system by closing its individual manual shut-off valve during any pressure testing of the gas supply piping system at test pressures equal to or less than 1/2 psi.

Connecting gas piping to the gas control valve/thermostat of water heater can be accomplished by either of two methods shown in Figure 18 and Figure 19.

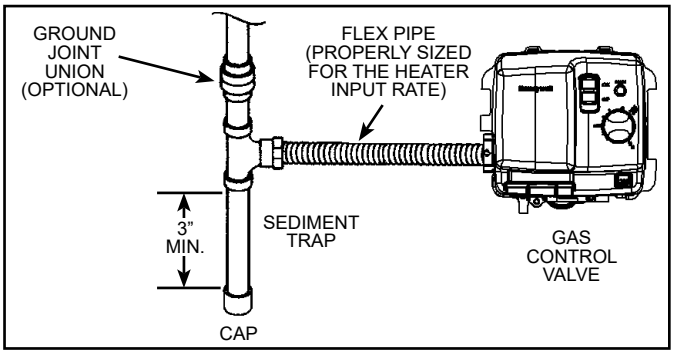

Figure 18.

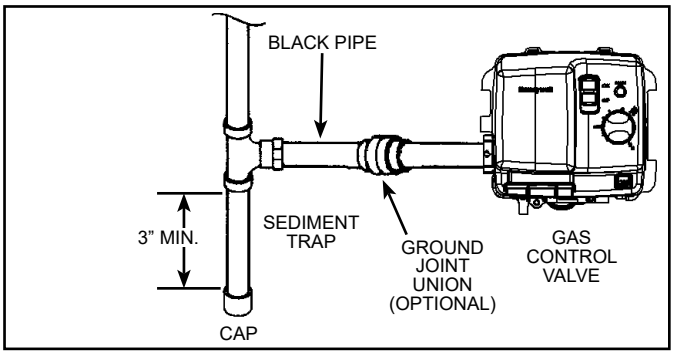

Figure 19.

Teflon® is a registered trademark of E.I. Du Pont De Nemours and Company.

SEDIMENT TRAPS

⚠ WARNING

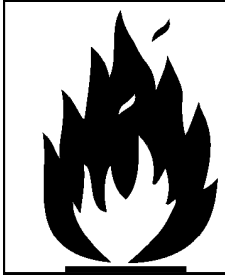

Fire and Explosion Hazard

- Contaminants in gas lines can cause fire or explosion.
- Clean all gas piping before installation.
- Install sediment trap in accordance with NFPA 54.

A sediment trap should be installed as close to the inlet of the water heater as practical at the time of water heater installation. The sediment trap should be either a tee fitting with a capped nipple in the bottom outlet or other device recognized as an effective sediment trap. If a tee fitting is used, it should be installed in conformance with one of the methods of installation shown in Figure 18 and Figure 19.

Contaminants in the gas lines may cause improper operation of the gas control valve/thermostat that may result in fire or explosion. Before attaching the gas line be sure that all gas pipe is clean on the inside. To trap any dirt or foreign material in the gas supply line, a sediment trap must be incorporated in the piping. The sediment trap must be readily accessible. Install in accordance with the "Gas Piping" section. Refer to the current edition of the **"National Fuel Gas Code", ANSI Z223.1/NFPA 54**.

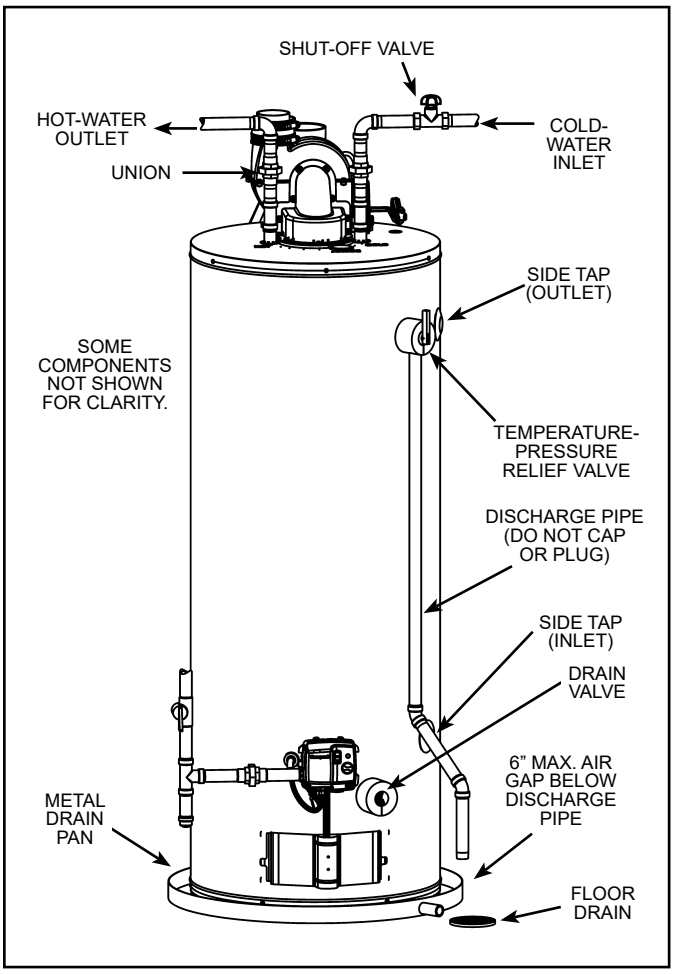

Figure 20.

FILLING THE WATER HEATER

CAUTION

Property Damage Hazard

- Avoid water heater damage.
- Fill tank with water before operating.

- Do not insert the power cord into the electrical receptacle until the heater has been fully installed.
- Never use this water heater unless it is completely full of water. To prevent damage to the tank, the tank must be filled with water. Water must flow from the hot-water faucet before turning "ON" gas to the water heater.

To fill the water heater with water:

1. Close the water heater drain valve by turning handle to the right (clockwise). The drain valve is on the lower front of water heater (see Figure 20).
2. If the heater is equipped with plumbing side taps and they are not connected to piping, ensure the side taps have been closed with pipe plugs.
3. Open all hot-water faucets served by the water heater to allow air to escape from the tank and the water piping. Ensure any shut-off valves between the heater and the faucets are the open position.
4. Open the cold-water supply valve to the water heater.

Notes:

- The cold-water supply valve must be left open when the water heater is in use.
- Avoid water leakage when filling the tank. Do not allow the insulation of the water heater to get wet as water can reduce the effectiveness of the insulation.

5. To ensure complete filling of the tank, allow air to exit by opening nearest hot-water faucet. Allow water to run until a constant flow is obtained. This will let air out of the water heater and the piping.
6. Check all water piping and connections for leaks. Repair as needed.

VENTING

Plan the vent system layout so that proper clearances are maintained from plumbing and wiring. Vent pipes serving power vented appliances are classified by building codes as “vent connectors”. Required clearances from combustible materials must be provided in accordance with information in this manual under "Locating The New Water Heater" and with the latest edition of **“National Fuel Gas Code”, ANSI Z223.1/NFPA 54** and local codes.

CAUTION

Improper Installation, use and service may result in property damage.

This unit includes an air intake terminal and an exhaust vent terminal.

⚠ WARNING

Breathing Hazard - Carbon Monoxide Gas

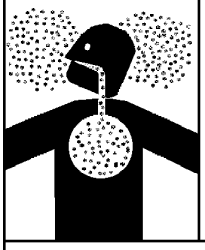

- Install vent system In accordance with codes.
- Do not operate water heater if flood damaged.
- Install water heater in accordance with the instruction manual.
- Do not operate if soot buildup is present.
- Do not obstruct water heater air intake(s) with insulating blanket.
- Do not place chemical vapor emitting products near water heater.
- Gas and carbon monoxide detectors are available.
- Never operate the heater unless it is vented to the outdoors and has adequate air supply to avoid risks of improper operation, fire, explosion or asphyxiation.
- Analyze the entire vent system to make sure that condensate will not become trapped in a section of vent pipe and therefore reduce the open cross sectional area of the vent.

Breathing carbon monoxide can cause brain damage or death. Always read and understand instruction manual.

Important: DO NOT common vent this water heater with any power vented appliance. DO NOT vent into a common chimney.

This water heater has a direct vent system in which all air for combustion (intake) is taken from the outside atmosphere and all combustion products (exhaust) are discharged to the outdoors.

This water heater must be properly vented for removal of exhaust gases to the outside atmosphere. Correct installation of the vent pipe system is mandatory for the safe and efficient operation of this water heater and is an important factor in the life of the unit.

VENT KIT

A Vent Kit included with this water heater may be used for standard sidewall or roof termination. It consists of:

1. Blower outlet adapter (rubber coupling and gear clamps),
2. Two (2) 45° Vent Termination Elbows,
3. Restrictive Vent Screens (see Figure 41),
4. Debris Vent Screens (see Figure 41),
5. Wall Plates,

The size and length of the venting will dictate which vent screen are required for the installation. When required, the restrictive screens may be located at the termination or next to the blower. In freezing weather it is recommended to locate the restrictive screens next to the blower to reduce the potential for frost buildup on the intake screen. The debris screens are to be installed at the termination to keep foreign materials out of the venting. If there are restrictive screens installed at the termination, the debris screens are not required.

Vent pipe must be installed in accordance with all local codes or, in the absence of such, the latest edition of **“National Fuel Gas Code”, ANSI Z223.1/NFPA 54**.

⚠ WARNING

Breathing Hazard - Carbon Monoxide Gas

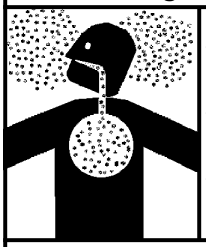

- **Install water heater in accordance with the instruction manual and NFPA 54.**
- **To avoid injury, combustion and ventilation air must be taken from outdoors.**
- **Do not place chemical vapor emitting products near water heater.**

Breathing carbon monoxide can cause brain damage or death. Always read and understand instruction manual.

Additional vent termination options (not included) are available. Instruction for installing these other termination methods are described later in this section.

Important: Check to make sure the vent pipe is not blocked in any way.

Note: Do not common vent this water heater with any other appliance. Do not install in the same chase or chimney with a metal or high-temperature plastic from another gas or fuel burning appliance.

Note: Before installing the Power Direct Vent Water Heater, it is recommended that the location of the pipe terminations (air intake and exhaust vent) be determined.

TERMINATION CLEARANCES (SIDE WALL)

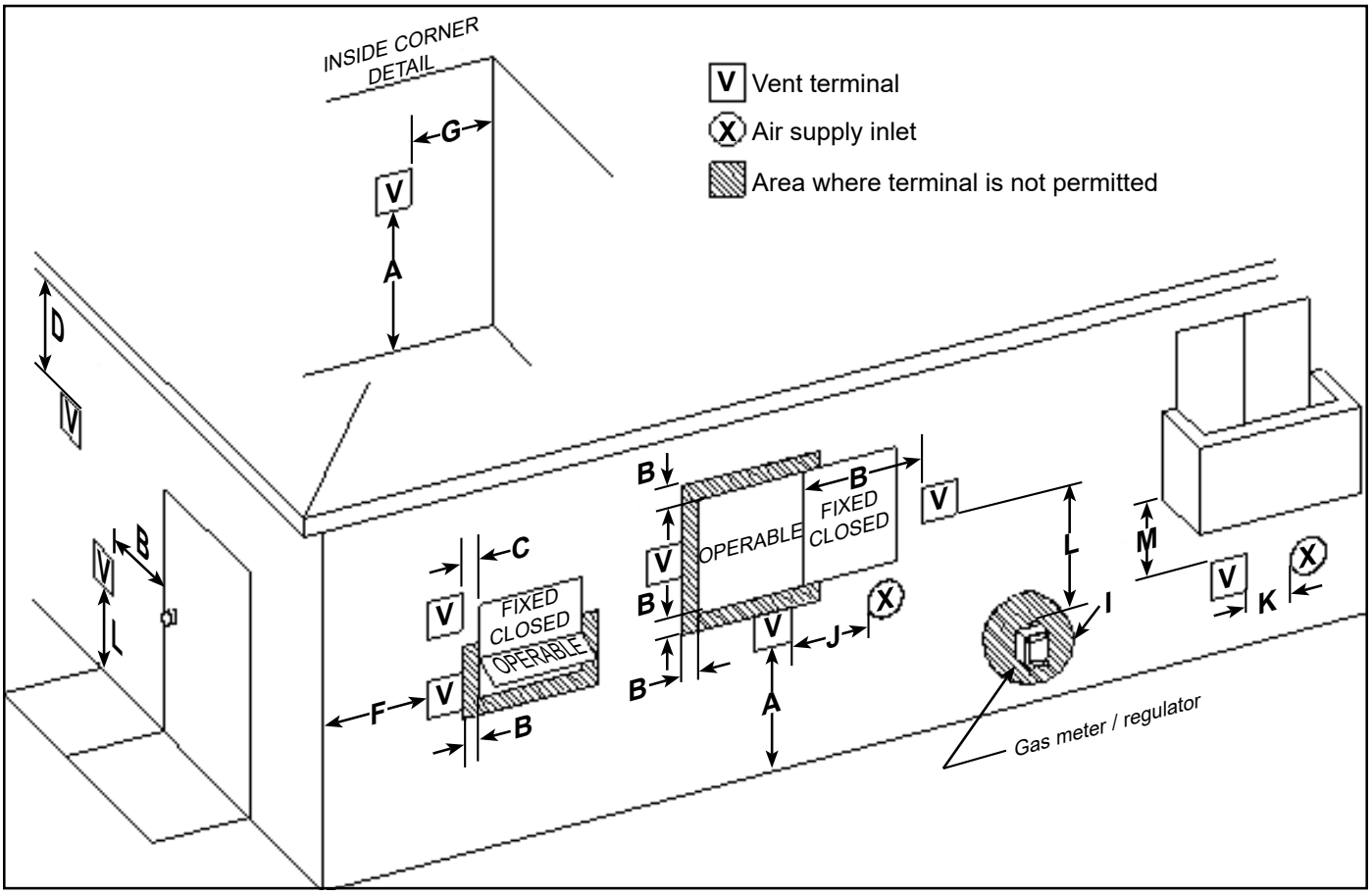

Figure 21.

Power Direct Vent Terminal Clearances[1]					
A	above grade, veranda, porch, deck, or balcony	12 in.	I	to regulator vent outlet	Not applicable
B	to window or door that may be opened	6 in. for appliances ≤10,000 BTUh (3 kW), 9 in. for appliances > 10,000 BTUh (3 kW) and ≤ 50,000 BTUh (15 kW), 12 in. for appliances > 50,000 BTUh (15 kW)	J	to non-mechanical air supply inlet to building or the combustion air inlet to any other appliance	6 in. for appliances ≤ 10,000 BTUh (3 kW), 9 in. for appliances > 10,000 BTUh (3 kW) and ≤ 50,000 BTUh (15 kW), 12 in. for appliances > 50,000 BTUh (15 kW)
C	to window or door that is permanently closed	0 in.	K	to a mechanical air supply inlet	3 ft. above if within 10 ft. horizontally
D	to soffit	12 in.	L	above equipment or public walkways	†
F	to outside corner	24 in.	M	under veranda, porch deck, or balcony	12 in. ‡
G	to inside corner	18 in.			

1 In accordance with the current ANSI Z223.1/NFPA 54 National Fuel Gas Code

† The vent shall not terminate over public walkways or over an area where condensate or vapor could create a nuisance or hazard or could be detrimental to the operation of regulators, relief valves, or other equipment.

‡ Permitted only if veranda, porch, deck, or balcony is fully open on a minimum of two sides beneath the floor.

TERMINATION TYPES

The combustion air intake and exhaust vent system and termination may be installed in one of the following type terminations:

1. Horizontal (2 Pipe) (air intake and exhaust vent).
2. Vertical (2 Pipe) (air intake and exhaust vent)
3. Concentric (horizontal/side wall installation).
4. Concentric (vertical/roof installation).
5. Deluxe Horizontal Venting kit (2 Pipe) (air intake and exhaust vent).
6. Low Profile (2 Pipe) (air intake and exhaust vent).

All pipe, fittings, pipe cement, primers and procedures must conform to American National Standard Institute and American Society for Testing and Materials (ANSI/ ASTM) standards.

SIDE WALL VENT TERMINATION (STANDARD)

Important: When terminating the vent on a side wall, the following specifications pertaining to terminal location must be followed (see Figure 22).

1. The air intake terminal and the exhaust vent terminal must terminate on the same exterior wall.
2. The vertical centerline of the air intake terminal must be located at a minimum of 8” from the vertical centerline of the exhaust vent terminal.
3. The horizontal centerline of the air intake terminal may not be located more than 24” below the horizontal centerline of the exhaust vent terminal.
4. To avoid exhaust recirculation, the air intake terminal may be rotated away from the exhaust vent terminal (see Figure 22).

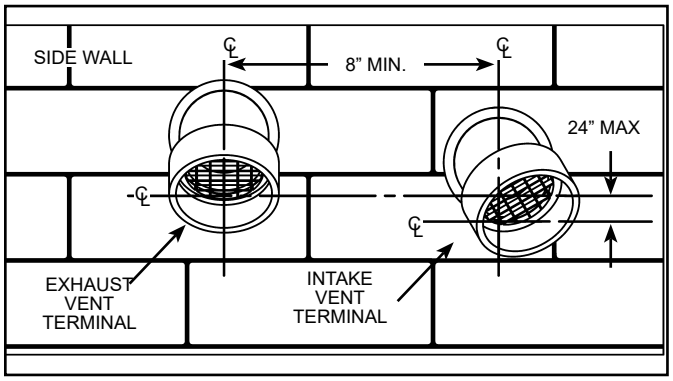

Figure 22.

ROOF VENT TERMINATION (STANDARD)

Important: When terminating the vents through a roof, the following specifications pertaining to terminal location must be followed (see Figure 23).

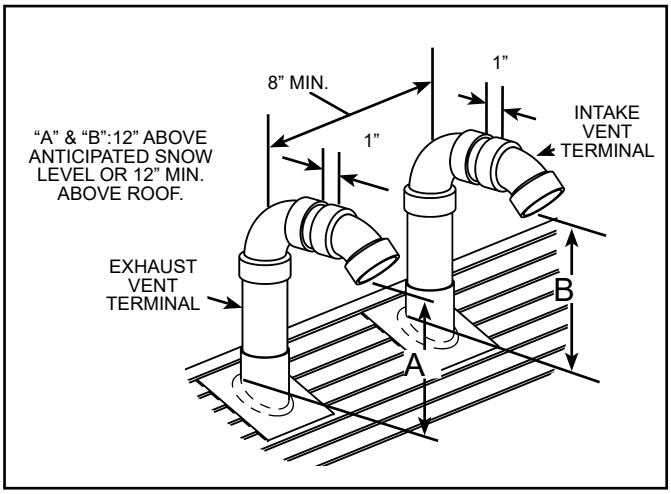

Figure 23.

1. The air intake termination and the exhaust vent termination shall extend 12” above anticipated snow level and at least 12” above the roof.
2. Must provide proper support for all pipes protruding through roof.
3. The vertical roof terminations should be sealed with a plumbing roof boot or equivalent flashing.
4. The air intake termination and the exhaust vent termination must penetrate the same side of roof.
5. The centerline of the air intake termination and the centerline of the exhaust vent termination must not be closer than 8”.
6. The air intake terminal and the exhaust vent terminal must be oriented facing downward and the same direction.

SIDE WALL VENT OPTION FOR COLD CLIMATES

Some winter weather conditions present a risk of ice accumulation at the intake termination screen. Such accumulation will restrict intake air flow. If local conditions present this risk, the termination configuration shown in Figure 24 is recommended. This will reduce the possibility of exhaust gas recirculation as well as reduce the chance of ice accumulation.

If necessary to avoid snow accumulation, the intake vent terminal may be fitted with a riser similar to that on the exhaust vent terminal. Both the intake and exhaust vent terminations may be 90° elbows if specified by local requirements.

Note: The vertical centerline of the air intake termination and the vertical centerline of the exhaust vent termination must not be closer than 8".

Important: Elbows (excluding the termination elbow) and risers must be considered when calculating total equivalent vent length (see Table 5).

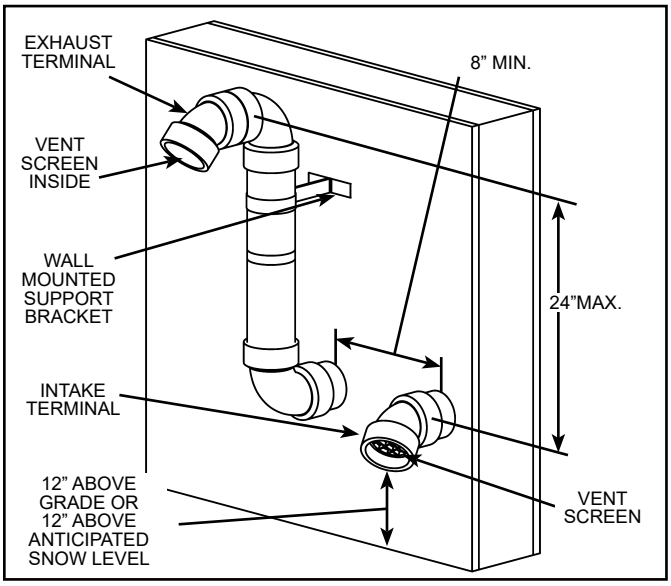

Figure 24.

Debris screens may be removed while there is a risk of ice accumulation but this can make the air intake susceptible to debris buildup, the entry of birds, other small animals or rodents. If the debris screens are removed to prevent ice accumulation, it is recommended that they be re-installed when the risk of ice accumulation has passed.

DELUXE HORIZONTAL VENTING KIT

The Deluxe Horizontal Venting kit was an optional through-the-wall-only concentric flue system for use only on U.S. residential and light duty commercial Power Direct Vent gas water heaters. This section gives directions for replacing series 300 and 310 PDV water heaters terminated with the Deluxe Horizontal Venting Kit.

1. Carefully disconnect the existing venting from the original water heater. Take care not to damage the venting as it will be reconnected to the new water heater.
2. Thoroughly inspect the vent termination for any damage (see Figure 28).
3. Check that all seams and joints in the vent termination air box are airtight.
4. Check that there are no leaks or cracks in the termination airbox.

Important: If there is any damage to the airbox, the water heater venting must not be connected to the Deluxe Vent termination.

It might be necessary to trim the vent to suit the height of the new water heater. For the purpose of these installations, the calculations for “equivalent length” will refer to the distance from the blower assembly on the water heater to the inside of the wall at the Deluxe Vent Termination.

“Pyramid” Vent Terminal

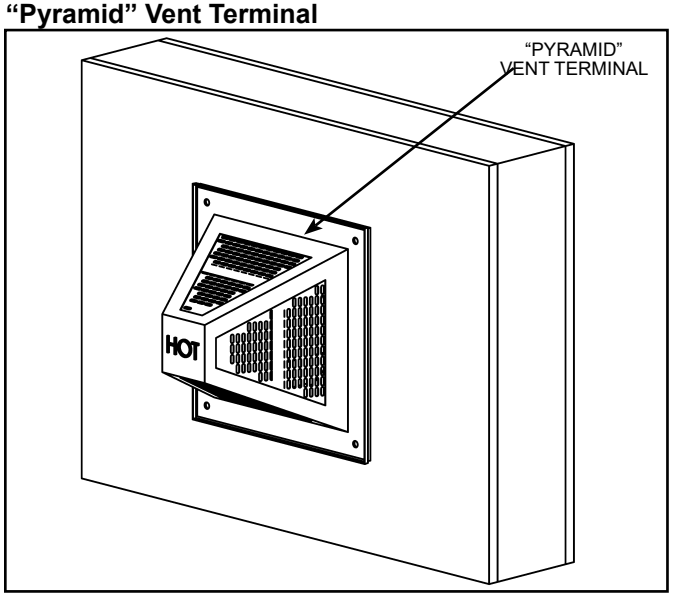

Figure 25.

“Mushroom” Vent Terminal

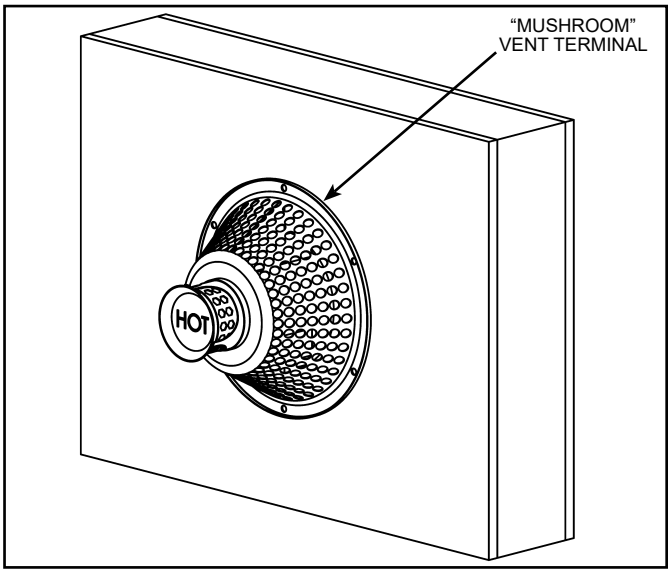

Figure 26.

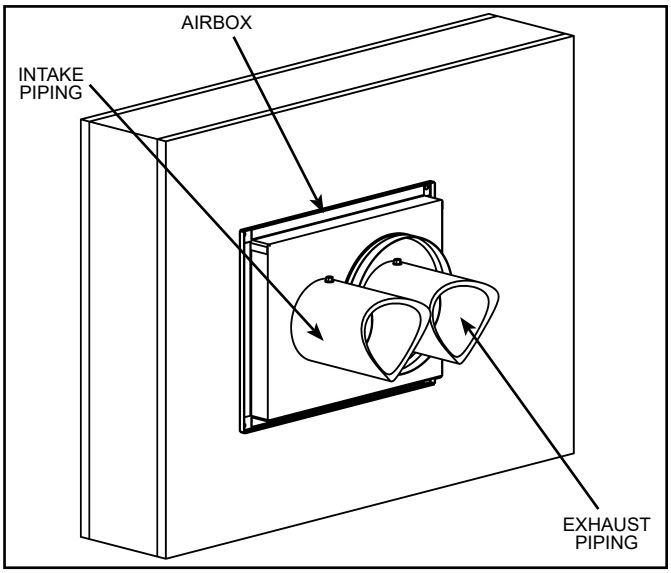

Figure 27.

Connections To The Air Box

1. Slide an O-ring over each of the fittings on the air box.

Note: An appropriate sized O-ring can be ordered from the heater manufacturer. Request kit number 100269737.

2. Slide the exhaust vent piping over the exhaust fitting on the air box. Ensure the O-ring remains in place between the piping and the fitting.
3. Slide the air intake vent piping over the air intake fitting on the air box. Ensure the O-ring remains in place between the piping and the fitting.
4. Drill 7/64” pilot holes for a #8 screw (see Figure 28). Take care not to damage the O-ring.
5. Secure the vent piping to the air box with screws (see Figure 28).

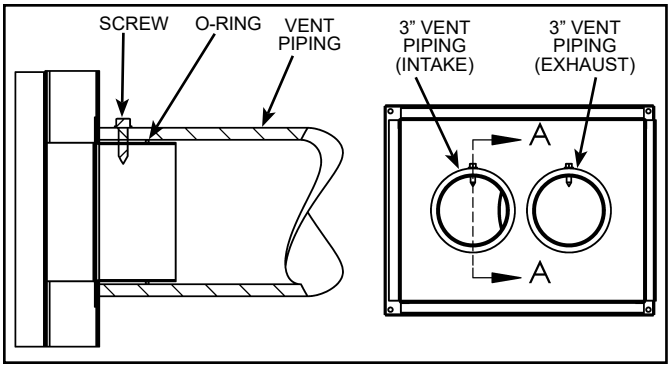
SCREW
O-RING
VENT PIPING
3" VENT PIPING (INTAKE)
3" VENT PIPING (EXHAUST)
A
A

Figure 28.

LOW PROFILE SIDE WALL VENT TERMINATION

The Low Profile termination is certified to be used on all PDV model series 300/301 and 310/311 water heaters. These instructions are to be followed in conjunction with the installation guide provided with the System 636 components or at www.ipexna.com/resources/technical-library.

All termination kits must be located and installed in accordance with local building code and the current edition of the **"National Fuel Gas Code", ANSI Z223.1/NFPA 54**.

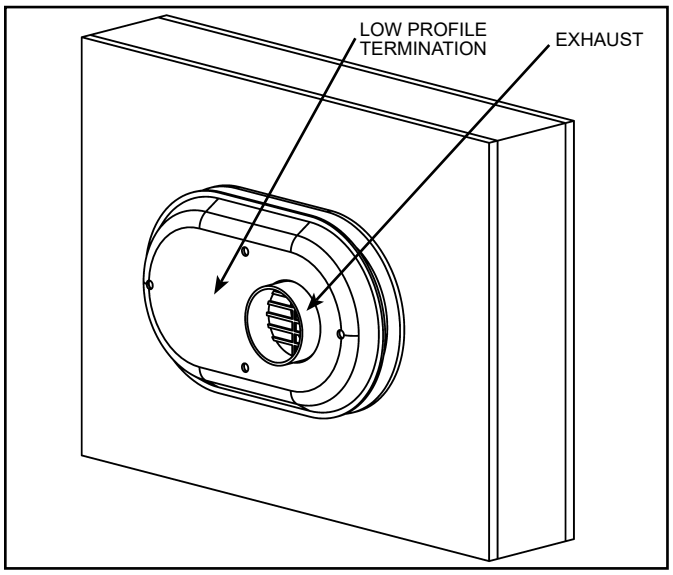

Figure 29.

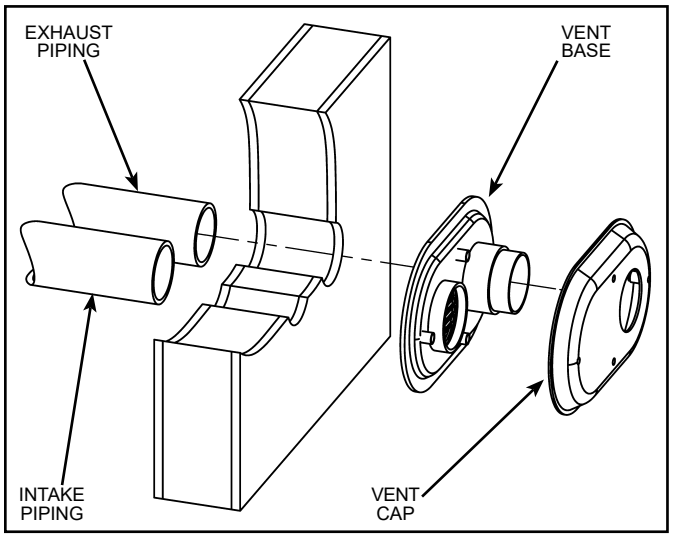

Figure 30.

Installation Procedure

1. Once the proper location has been determined, cut 2 holes in the wall large enough to accommodate the pipe. Pipe diameters and distance between hole centers can be found in Table 2.
2. Slide both the intake and exhaust pipes through the holes. Solvent cement both pipes to the base of the vent termination kit, follow the solvent cementing procedures outlined in the System 636 Installation Guide.
3. To fasten the Base to the wall, use the supplied screws and anchors. A 3/16" hole, 1-3/16" deep, will need to be drilled for the anchors. Locate the anchor hole using the base as a template.
4. Screw the Cap to the Base using the supplied screws.
5. Once the vent termination and pipes are secured, the wall penetrations will need to be sealed from the interior using a PVC-compatible sealant material.

Description	Pipe O.D.	Hole Spacing (ctr to ctr)
3" Flush Mount Vent Kit	3.5"	5.6"

Table 2.

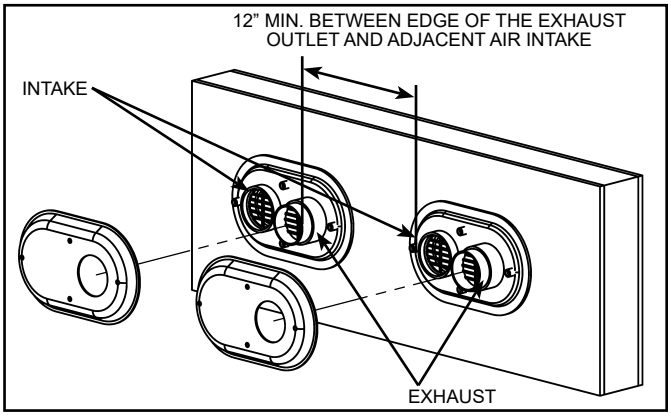

Figure 31.

Figure 32 illustrates the possible orientations of the Low Profile termination. Note that only three of the orientations are allowed.

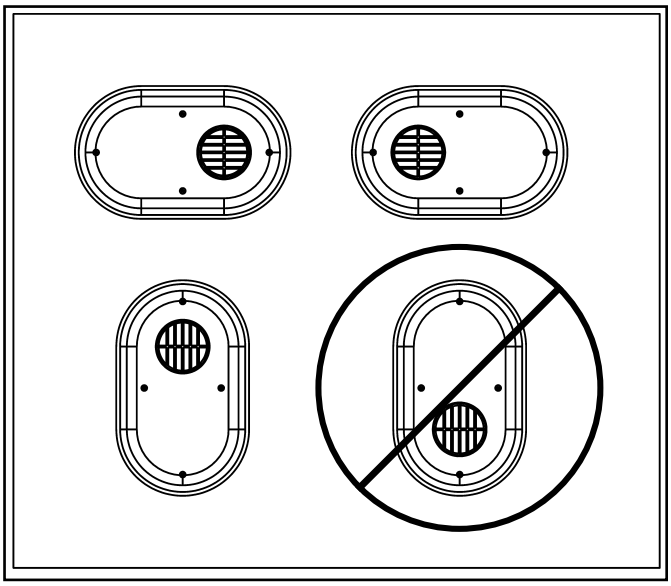

Figure 32.

CONCENTRIC VENT TERMINATION

A concentric vent termination kit (see Table 3) may be used for vertical or horizontal terminations. Figure 33 illustrates the concentric vent kit for a horizontal (side wall) installation. To prevent rain water from entering the exhaust outlet, slope the vent kit at a downward pitch of 1/4" per 5' away from the inside wall. Ensure the combustion air intake location is above the anticipated snow level. Figure 34 illustrates the concentric vent termination kit in a vertical (roof) installation. Ensure the combustion air intake location is above the anticipated snow level.

VENT DIA.	P/N
2"	100112869
3"	100111100

Table 3.

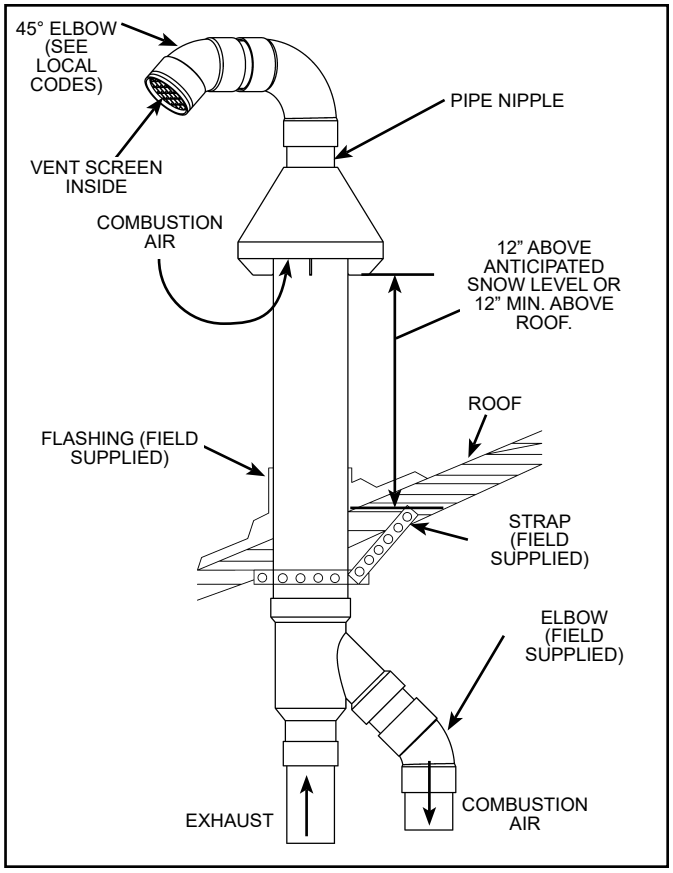

Figure 34.

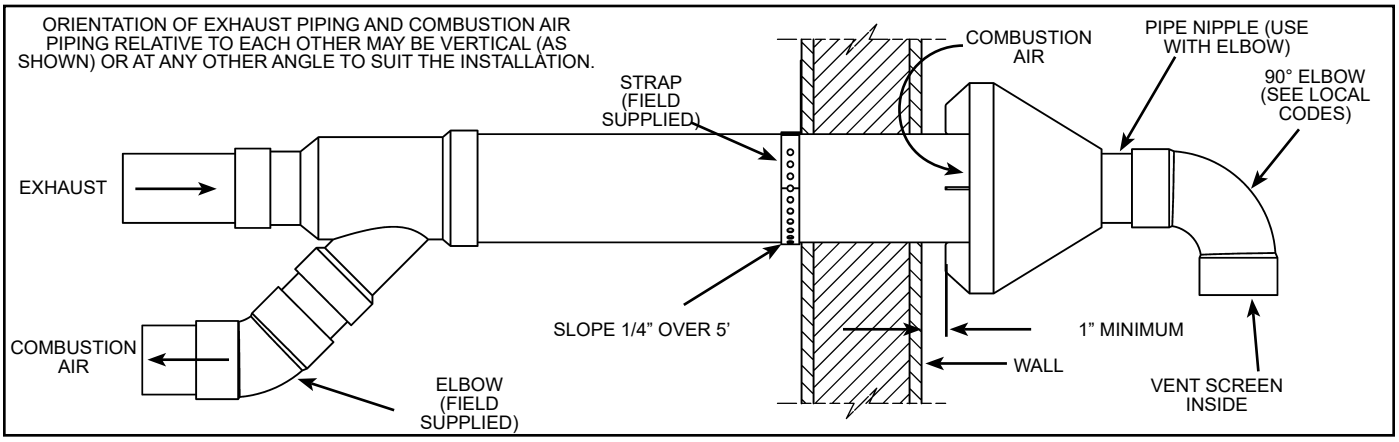

Figure 33.

MULTIPLE CONCENTRIC VENT TERMINATION

When two concentric vent kits are being installed, the vent hood centers shall be either less than 9.5” apart or more than 43.5” apart. Spacings between 9.5” and 43.5” are not allowed due to the possibility of exhaust cross circulation (see Figure 35).

When more than 2 kits are installed only 2 of them shall be less than 9.5” apart. Never install 3 termination kits together less than 9.5” apart (see Figure 36).

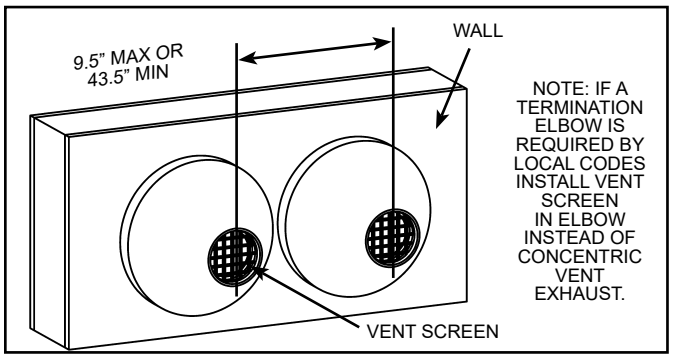

Figure 35.

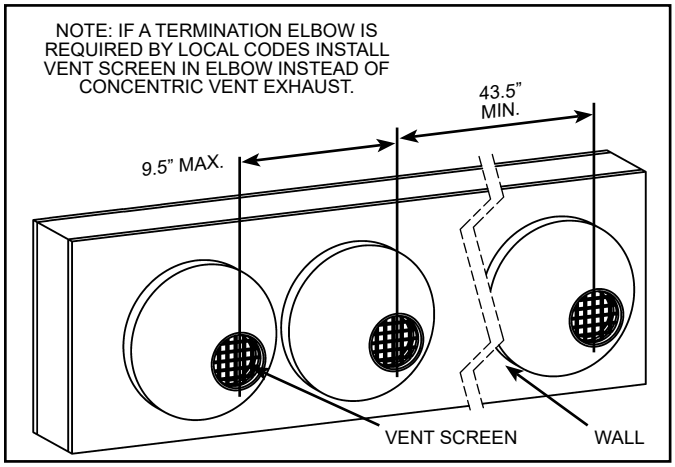

Figure 36.

TEE TERMINATION (SIDEWALL & ROOF)

A Tee fitting as the exhaust termination and a 90° fitting as the air intake termination are permitted on the water heater models listed in Table 4.

WATER HEATER MODEL	MAX. EQUIV. VENT LENGTH	VENT DIAM.
40gal, 40k BTU/hr	50’	2”
50gal, 45k BTU/hr	50’	2”

Table 4.

When a Tee termination is used, two additional vent screens must be purchased and installed (see Figure 37 and Figure 38). On installations of venting less than 20’, a restrictive vent screen must be used. On installations over 20’ a debris vent screen must be used (see Figure 41).

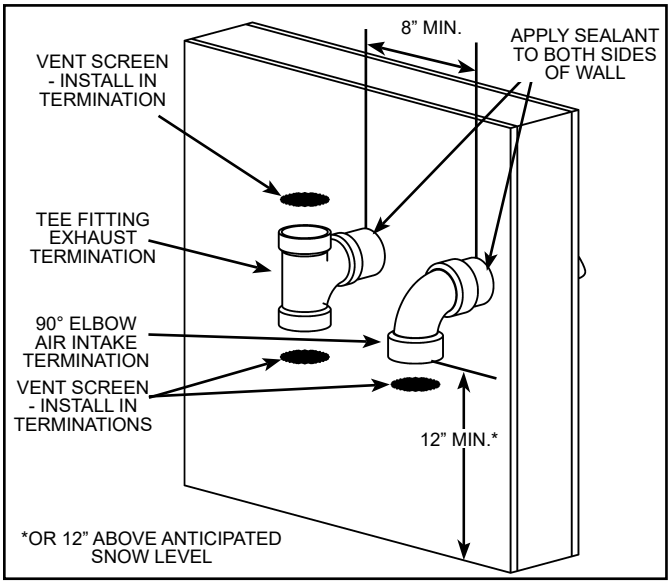

Figure 37.

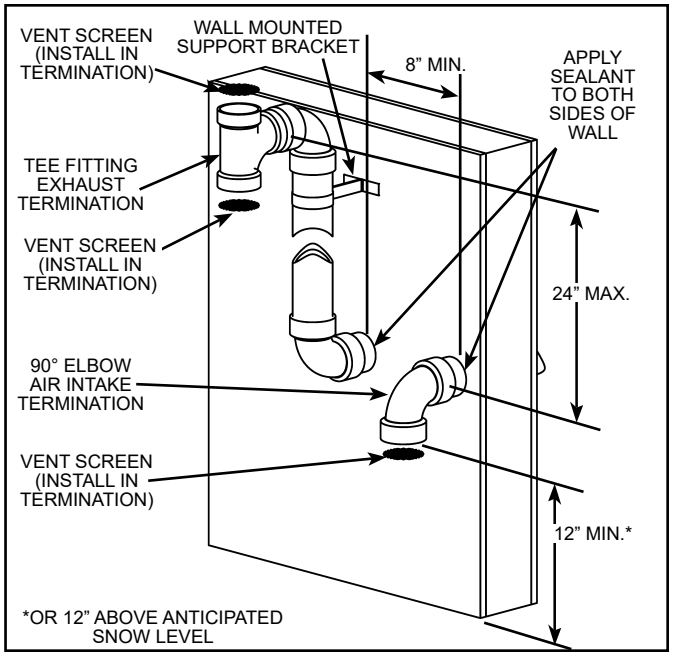

Figure 38.

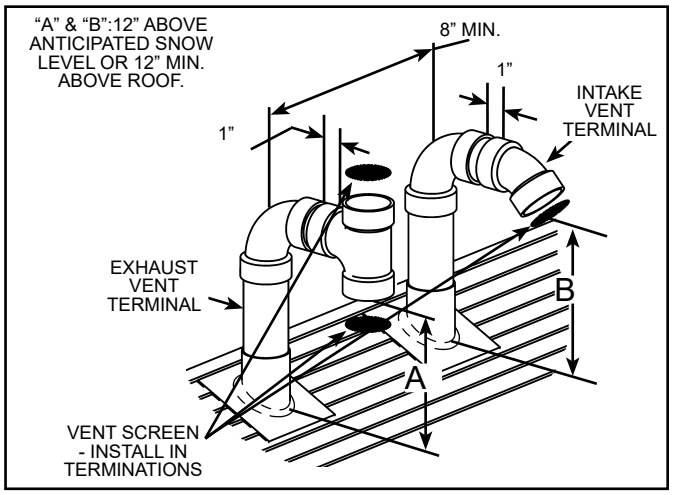

Figure 39.

VENT PIPE MATERIAL

The combustion air intake pipe material may be PVC, ABS, CPVC or polypropylene.

This heater is certified to use Schedule 40 PVC or CPVC, or polypropylene material for venting. Check local codes to determine which materials are allowed in your area and only use approved material. All venting components must be joined with the approved primer/ cleaner and solvent cement. Do not cement the venting system to the heater. For polypropylene vent systems follow the manufacturer's instructions.

Note: Polypropylene vent systems require separate adaptor, termination, and elbows (field supplied). It is recommended to use InnoFlue® SW Residential products from Centrotherm (www.centrotherm.us.com).

Note: Plastic pipe and fittings are available through most plumbing suppliers. Always check the marking on the pipe to make sure you are using the correct material.

Note: Use of cellular core PVC (ASTM F891), cellular core CPVC, or Radel® (polyphenolsulfone) in non-metallic venting systems is prohibited.

POLYPROPYLENE VENT SYSTEMS

Polypropylene vent systems do not use cement to connect the pipe and elbow sections but use a push together gasket seal method. Do not attempt to connect polypropylene with sealant cement.

- Polypropylene vent systems are designed to use specific adaptors to connect into the rubber coupling on the top of the blower. These are available through your venting supplier.
- The PVC vent termination elbow supplied with this heater has been certified to be used with polypropylene vent systems. A polypropylene to PVC end connection is required and is available through your venting supplier.
- Optional wall plates that fit the polypropylene venting are also available through your supplier.

1. Carefully inspect the entire venting system for any signs of cracks or fractures, particularly at joints between elbows and other fittings and straight runs of vent pipe.
2. Check system for signs of sagging or other stresses in joints as a result of misalignment of any components in the system. If any of these conditions are found, they must be corrected in accordance with the venting instructions elsewhere in this manual before completing installation and putting the water heater into service.
3. The vent piping shall be connected to the blower with the rubber coupling and secured with gear clamps. The coupling and clamps are provided with the heater.
4. Even though the flue gas temperature leaving the blower is hot, some installations will have water condense in the vent piping. If this occurs, then adequate means of draining and disposing of the condensate shall be made by the installer.

VENT PIPE LENGTH AND SIZING

Refer to Table 6 and Table 7 for vent pipe sizing. If the installation requires a vent riser, suitable drainage must be provided to ensure condensation does not accumulate (see Figure 50). The specified maximum lengths are for **each** of the intake and exhaust systems and **not** for the combined lengths of both systems. Minimum pipe length is 2' with a minimum of one 90° elbow per side (intake and exhaust).

1. Determine termination type and pipe size.
2. Determine number of elbows in vent system. Do not include termination elbow. Calculate the maximum equivalent length of the exhaust and air intake system using Table 5 to determine equivalent length values.

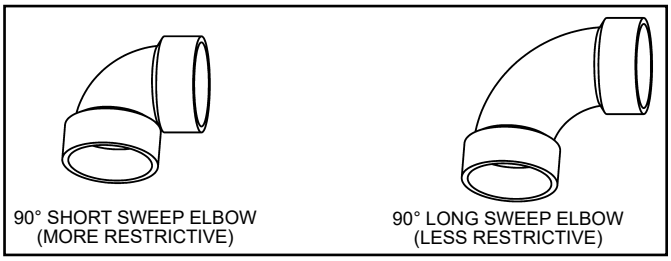

Figure 40.

Elbow Type	Equivalent Length Of Straight Pipe	
	Short Sweep/ Radius	Long Sweep/ Radius
90°	8'	5'
45°	4'	2.5'

Table 5.

WATER HEATER MODEL	HEATER INPUT (BTU/HR)	VENT SIZE (INSIDE DIAM.)	PRESSURE SWITCH SETTINGS (in. W.C.)		2 PIPE EQUIV. VENT LENGTH		CONC. VENT EQUIV. VENT LENGTH	
			N.C.	N.O.	MAX.	MIN.	MAX.	MIN.
40 gal.	40k	2” (See Figure 47)†	-2	-0.75	50’ plus term. elbow and debris screen*	7’ plus term. elbow and restrictive screen* on both intake and exhaust	45’ plus term. and debris screen*	7’ plus term. and restrictive screen* on exhaust only
50 gal.	45k							
40 gal.	40k	3” (See Figure 48)	-2	-0.75	125’ plus term. elbow and restrictive screen*	7’ plus term. elbow and restrictive screen* on both intake and exhaust	100’ plus term. and restrictive screen*	7’ plus term. and restrictive screen* on exhaust only
50 gal.	45k							
	62k (N.G.)	3” (See Figure 48)	-1.75	-0.5	50’ term. elbow and debris screen*		45’ plus term. and debris screen*	
	58k (L.P.)							
75 gal.								
	76k		-1.5	-1.05				
40 gal.	40k	4” (See Figure 49)	-2	-0.75	180’ plus term. elbow and debris screen*	50’ plus term. elbow and debris screen*	n/a	n/a
50 gal	45k							
50 gal.	58k (L.P.)	4” (See Figure 49)	-1.75	-0.5	125’ plus term. elbow and debris screen*			
	62k (N.G.)							
75 gal.								
	76k		-1.5	-1.05				

* see Figure 41 and Table 5.
† Requires 2” kit 100086430.

Notes:
1. A horizontal vent **must** have a 45° or 90° vent termination elbow to direct the vent pipe downward unless otherwise specified by local requirements.
2. A vertical vent **must** have a 90° elbow to direct the vent pipe horizontally followed by a vent termination 45° elbow to direct the vent pipe downward unless otherwise specified by local requirements.
3. If additional elbows are used in the vent system the allowable vent lengths are reduced.
4. Two 45° elbows are considered the equivalent of one 90° elbow.

Table 6.

WATER HEATER MODEL	HEATER INPUT (BTU/ HR)	VENT SIZE (INSIDE DIAM.)	PRESSURE SWITCH SETTINGS (in. W.C.)		LOW PROFILE EQUIV. VENT LENGTH		PYRAMID EQUIV. VENT LENGTH		MUSHROOM EQUIV. VENT LENGTH	
			N.C.	N.O.	MAX.	MIN.	MAX.	MIN.	MAX.	MIN.
40 gal.	40k	3” (See Figure 48)	-2	-0.75	75’ plus term. and restrictive screen* on both intake and exhaust	7’ plus term. and restrictive screen* on both intake and exhaust	50’ plus term. and restrictive screen*	7’ plus term. and restrictive screen* on both intake and exhaust	50’ plus term. and restrictive screen*	7’ plus term. and restrictive screen* on both intake and exhaust
50 gal.	45k									
	62k (N.G.)		-1.75	-0.5	50’ plus term.		50’ plus term.	7’ term. and restrictive screen* on both intake and exhaust	50’ plus term.	7’ plus term. and restrictive screen* on both intake and exhaust
	58k (L.P.)									
75 gal.										
	76k		-1.5	-1.05						

* see Figure 41 and Table 5.

Notes:
1. A horizontal vent **must** have a 45° or 90° vent termination elbow to direct the vent pipe downward unless otherwise specified by local requirements.
2. A vertical vent **must** have a 90° elbow to direct the vent pipe horizontally followed by a vent termination 45° elbow to direct the vent pipe downward unless otherwise specified by local requirements.
3. If additional elbows are used in the vent system the allowable vent lengths are reduced.
4. Two 45° elbows are considered the equivalent of one 90° elbow.

Table 7.

Vent Screens

⚠ WARNING

Breathing Hazard - Carbon Monoxide Gas



Failure to install the appropriate screen could result in improper heater operation with attendant risk of property damage, personal injury or death by fire or carbon monoxide poisoning.

Breathing carbon monoxide can cause brain damage or death. Always read and understand instruction manual.

The vent kit supplied with this water heater includes one (1) pair of restrictive vent screens and one (1) pair of debris screens (see Figure 41). For safety and optimum efficiency performance, ensure the correct vent screen is installed for the vent length in your installation. These screens have been sized to ensure maximum energy efficiency of the vent system based on the "equivalent length" of the vent piping. Choose only the restrictive screen that matches your venting configuration (see Figure 41, Table 6 and Table 7). When required, the restrictive vent screen MUST be installed for proper operation of the water heater. How to determine the "equivalent length" is shown in Table 5.

When required, the restrictive screens may be located at the termination or next to the blower. In freezing weather it is recommended to locate the restrictive screens next to the blower to reduce the potential for frost buildup on the intake screen.

- Install the appropriate restrictive vent screen into the vent system.
- Install the debris vent screen in both the air intake pipe and the exhaust pipe.
- The debris screens are to be installed at the termination to keep foreign materials out of the venting.
- If there are restrictive screens installed at the termination, the debris screens are not required.
- Restrictive vent screens in the termination must be secured with corrosion resistant sheet metal screws. This will allow for easy removal for inspection and cleaning.
- The debris vent screens are self-securing.

Note: The same vent screen type (restrictive or debris) should be installed in the intake and the exhaust piping. In the concentric vent application, the screen is to be installed in the exhaust piping only.

VENT SIZE (INSIDE DIAM.)	VENT SCREEN	
	RESTRICTIVE	DEBRIS
2”	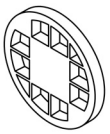 FOR VENT LENGTH LESS THAN OR EQUAL TO 20 EQUIVALENT FT. USE THIS SCREEN (SUPPLIED).	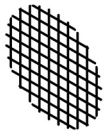
3” (40k and 45k BTU/hr models)	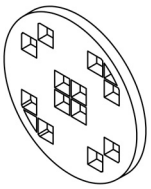 FOR ALL VENT LENGTHS USE THIS SCREEN (SUPPLIED).	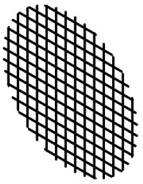
3” (58k, 62k, 72k and 76k BTU/hr models)	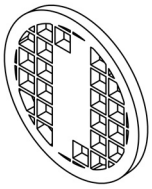 FOR VENT LENGTH LESS THAN OR EQUAL TO 20 EQUIVALENT FT. USE THIS SCREEN (SUPPLIED).	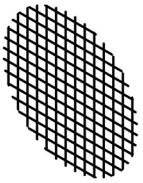
4”	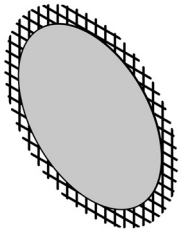 FOR 40k & 45k HEATERS FOR ALL LENGTHS OF VENTING USE THIS SCREEN (SUPPLIED)	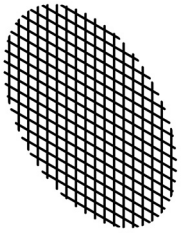

Figure 41.

Vent Pipe Installation

The following guidelines should be followed when installing the air intake and exhaust vent system:

- Venting should be as direct as possible with a minimum number of pipe fittings.
- Vent diameter must not be reduced unless specifically noted in the installation instructions.
- Support all horizontal pipe runs according to local codes or the venting manufacturer's instructions.
- Vents run through unconditioned spaces where below freezing temperatures are expected, are not recommended.
- Vents run through unconditioned spaces inside a building may result in the condensation of flue gases during the winter season. The rubber coupling joined to the blower includes a nipple with a cap. In installations such as this connect a condensation trap to this nipple.

Do not use solvent cement to connect the exhaust vent system to the blower. Use the rubber coupling and gear clamps instead. This connection must be removable to service the heater. All other joints in the exhaust vent system must be properly cemented.

Note: If a vent screen in the air intake vent system is located at the blower, this joint should not be cemented but secured with a screw to allow servicing (see Figure 47 through Figure 49).

Vent Pipe Runs

1. The exhaust vent system must not, under any circumstances, be run downhill then run uphill thus forming a valley. It may leave a space to accumulate condensation and block vent pipe.
2. Horizontal runs require a minimum 1/8" rise per 5' and a support according to venting manufacturer's instructions. Ensure there is enough height between heater and termination to raise vent pipe runs the required distance.
3. Vertical runs must provide proper support to prevent stress on the pipes according to venting manufacturer's instructions.

Vent Terminal Installations

Important: The vent system must terminate so that proper clearances are maintained as cited in local codes or the latest edition of **"National Fuel Gas Code", ANSI Z223.1/ NFPA 54** (illustrated Figure 21).

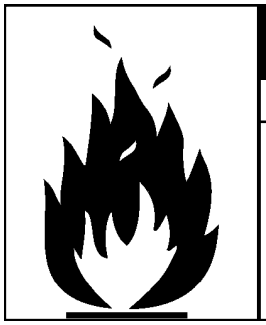

⚠ WARNING

Fire Hazard

- Primers and cements are extremely flammable, and must not be stored or used near heat or open flame.
- Also, use only in a well ventilated area.

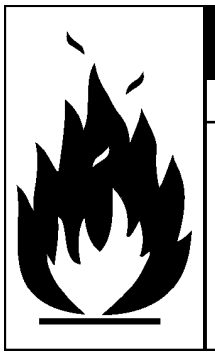

⚠ WARNING

Fire Hazard

- Cans of cement and primer should be closed at all times when not in use to prevent evaporation of chemicals and hardening of cement.
- They are also very flammable and should be kept away from heat or flame.

VENT PIPE PREPARATION

1. INITIAL PREPARATION
   - Make sure the solvent cement you are planning to use is designed for the specific application you are attempting.
   - Know the physical and chemical characteristics and limitations of the PVC and CPVC piping materials that you are about to use.
   - Know the reputation of your manufacturer and their products.
   - Know your own qualifications or those of your contractor. The solvent welding technique of joining PVC and CPVC pipe is a specialized skill just as any other pipe fitting technique.
   - Closely supervise the installation and inspect the finished job before start-up.
   - Contact the manufacturer, supplier, or competent consulting agency if you have any questions about the application or installation of PVC and CPVC pipe.
   - Take the time and effort to do a professional job. Shortcuts will only cause you problems and delays in start-up. By far, the majority of failures in PVC and CPVC systems are the result of shortcuts and/ or improper joining techniques.

2. SELECTION OF MATERIALS (PVC and CPVC VENTING)
   - Cutting Device - Saw or Pipe Cutter
   - Deburring Tool, Knife, File, or Beveling Machine (2” and above)
   - Brush - Pure Bristle
   - Rag - Cotton (Not Synthetic)
   - Primer and Cleaner
   - Solvent Cement - PVC for PVC Components and CPVC for CPVC Components only
   - Containers - Metal or Glass to hold Primer and Cement. Select the type of PVC or CPVC materials to be used on the basis of their application with respect to chemical resistance, pressure rating, temperature characteristics, etc.
   - Insertion Tool - Helpful for larger diameter pipe and fittings 6” and above.

⚠ WARNING

Fire or Explosion Hazard

- Do not store or use gasoline or other flammable vapors and liquids in the vicinity of this or any other appliance.
- Avoid all ignition sources if you smell gas.
- Do not expose water heater control to excessive gas pressure.
- Use only gas shown on rating plate.
- Maintain required clearances to combustibles.
- Keep ignition sources away from faucets after extended period of non-use.



Read instruction manual before installing, using or servicing water heater.



Primer:

It is recommended that Tetrahydrofuran (THF) be used to prepare the surfaces of pipe and fittings for solvent welding. Do not use water, rags, gasoline or any other substitutes for cleaning PVC or CPVC surfaces. A chemical cleaner such as MEK may be used.

Cement:

PVC Materials should use ASTM D-2564 Grade Cement; CPVC Materials should use ASTM F-493 Grade Cement and ABS Materials should use ASTM D-2235 Grade Cement. Select the proper cement; Schedule 40 cement should be used for Schedule 40 pipe. Never use all-purpose cements, commercial glues and adhesives or ABS cement to join PVC or CPVC pipe and fittings.

.

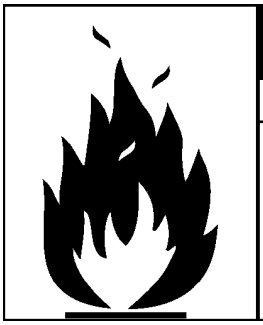

⚠ WARNING

Fire Hazard

- Primers and cements are extremely flammable, and must not be stored or used near heat or open flame.
- Also, use only in a well ventilated area.

Applicators:

Select a suitable pure bristle type paint brush. Use a proper width brush or roller to apply the primer and cement (see chart below). Speedy application of cement is important due to its fast drying characteristics. IMPORTANT NOTE: A dauber type applicator should only be used on pipe sizes 2” and below. For larger diameter pipe, a brush or roller must be used.

RECOMMENDED BRUSH* SIZE FOR PRIMER AND CEMENT APPLICATIONS	
Nominal Pipe (IPS)	Brush Size
2	1.5”
3	1.5” - 2.5”
*USE ONLY NATURAL BRISTLE	

Table 8.

3. MAKING THE JOINT

A. **Cutting**

Pipe must be squarely cut to allow for the proper interfacing of the pipe end and the fitting socket bottom. This can be accomplished with a miter box saw or wheel type cutter. Wheel type cutters are not generally recommended for larger diameters since they tend to flare the corner of the pipe end. If this type of cutter is used, the flare on the end must be completely removed.

Note: Power saws, if used, should be specifically designed to cut plastic pipe.

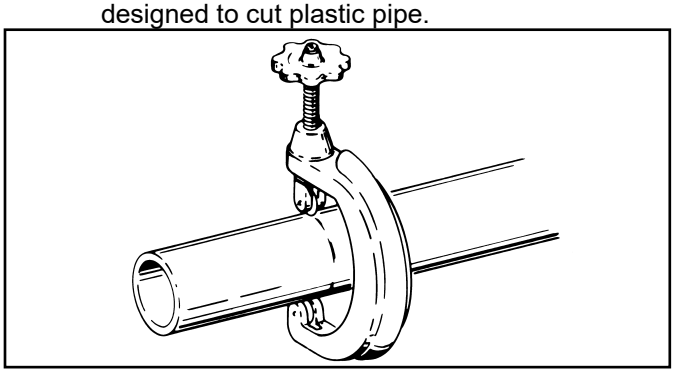

Figure 42.

B. **Deburring**

Use a knife, plastic pipe deburring tool, or file to remove burrs from the end of small diameter pipe. Be sure to remove all burrs from around the inside as well as the outside of the pipe. A slight chamfer (bevel) of about 10°-15° should be added to the end to permit easier insertion of the pipe into the end of the fitting. Failure to chamfer the edge of the pipe may remove cement from the fitting socket, causing the joint to leak.

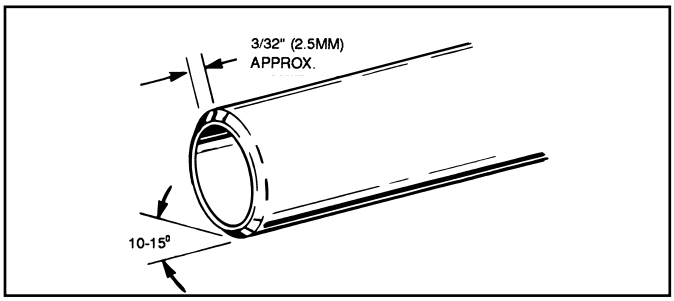

Figure 43.

C. **Test dry fit of the joint**

Tapered fitting sockets are designed so that an interfaced fit should occur when the pipe is inserted about 1/3 to 2/3 of the way into the socket. Occasionally, when pipe fitting dimensions are at the tolerance extremes, it will be possible to fully insert dry pipe to the bottom of the fitting socket. When this happens, a sufficient quantity of cement must be applied to the joint to fill the gap between the pipe and fitting. The gap must be filled to obtain a strong, leak-free joint.

D. **Inspection, cleaning, priming**

Visually inspect the inside of the pipe and fitting sockets and remove all dirt, grease or moisture with a clean dry rag. If wiping fails to clean the surfaces, a chemical cleaner must be used. Check for possible damage such as splits or cracks and replace if necessary.

Depth-of-entry

Marking the depth of entry is a way to check if the pipe has reached the bottom of the fitting socket in Step F. Measure the fitting depth and mark this distance on the pipe O.D. You may want to add several inches to the distance and make a second mark as the primer and cement will most likely destroy your first one.

Apply primer to the surface of the pipe and fitting socket with a natural bristle brush. This process softens and prepares the PVC or CPVC for the solvent cementing step. Move quickly and without hesitation to the cementing procedure while the surfaces are still wet with primer.

E. **Application of solvent cement**

- Apply solvent cement evenly and quickly around outside of pipe at a width a little greater than the depth of the fitting socket.
- Apply a light coat of cement evenly around the inside of the fitting socket. Avoid puddling.
- Apply a second coat of cement to the pipe end.



⚠ WARNING

Fire Hazard

- Cans of cement and primer should be closed at all times when not in use to prevent evaporation of chemicals and hardening of cement.
- They are also very flammable and should be kept away from heat or flame.

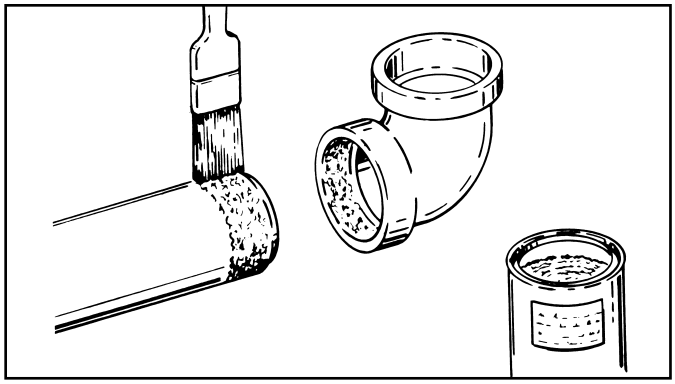

Figure 44.

F. **Joint assembly**
Working quickly, insert the pipe into the fitting socket bottom and give the pipe or fitting a 1/4 turn to evenly distribute the cement. Do not continue to rotate the pipe after it has hit the bottom of the fitting socket. A good joint will have sufficient cement to make a bead all the way around the outside of the fitting hub. The fitting will have a tendency to slide back while the cement is still wet so hold the joint together for about 15 seconds.

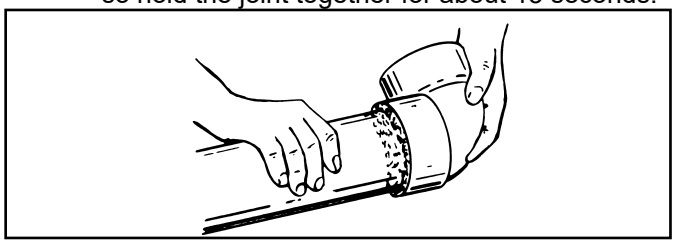

Figure 45.

G. **Cleanup and joint movement**
Remove all excess cement from around the pipe and fitting with a dry cotton rag. This must be done while the cement is still soft.
The joint should not be disturbed immediately after the cementing procedure, and sufficient time should be allowed for proper curing of the joint. Exact drying time is difficult to predict because it depends on variables such as temperature, humidity and cement integrity. For more specific information, you should contact your solvent cement manufacturer.

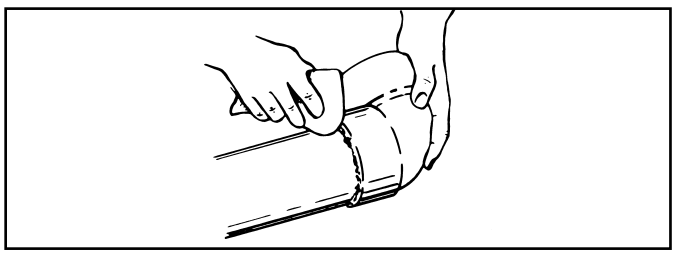

Figure 46.

BLOWER ASSEMBLY INSTALLATION

1. This power vented water heater comes with blower assembly installed.
2. After unit is set in place, make sure blower assembly is still mounted securely. Make sure there is no damage to blower.
3. Make sure there is no packing material in the inlet or discharge of the blower.
4. Make sure that the plastic tubing is still attached from the air pressure switch to the port on the blower motor housing. Make sure the plastic tubing is not folded anywhere between the pressure switch and the blower motor housing (see Figure 47 through Figure 49).
5. This water heater is a polarity sensitive appliance and will not operate if the power supply polarity is reversed. Power to this water heater must be wired properly (correct polarity).
6. Do not plug in power cord until the vent system is completely installed. The heater operates on 110-120 VAC. A grounded outlet must be within reach of the 6 foot flexible power cord supplied with the heater. The power cord supplied may be used on a unit only where local codes permit. If local codes do not permit use of flexible power supply cord:
   a. Make sure the unit is unplugged from the wall outlet. Remove the screw and open the cover on the junction box on the blower.
   b. Cut the flexible power cord, leaving enough to be able to make connections. Remove the strain relief fitting from the box.
   c. Install a suitable conduit fitting.
   d. Splice field wiring into existing wiring using code authorized method (wire nuts, etc).
   e. Be certain that the neutral and line connections are not reversed when making these connections.
   f. Ground heater properly. This water heater must be grounded in accordance with the current edition of **"National Electrical Code", NFPA 70** and/or local codes. These must be followed in all cases. The water heater must be connected to a grounded metal, permanent wiring system or an equipment grounding conductor must be run with the circuit conductors and connected to the equipment grounding terminal or lead on the water heater (see Figure 12; the wiring diagram).
   g. Install the cover on the junction box and secure it shut.
7. The blower discharge has a rubber coupling made to accept only straight sections of 2" or 3" pipe. To start off with an elbow, a short section of the straight pipe must be cut and glued into the end of the elbow that will mount in the rubber coupling.

Connections To The Blower And Air Duct

1. The vent piping connects into the rubber coupling located on the top of the blower assembly. This coupling includes gear clamps to connect the venting to the blower. See Figure 48.

Important: These connections must be properly seated and tightened to prevent the leakage of flue gases into the area. See Figure 47 through Figure 49.

⚠ WARNING

Breathing Hazard - Carbon Monoxide Gas



Vent pipe connections to the blower must be properly seated and tightened to prevent the leakage of flue gases into the area.

Breathing carbon monoxide can cause brain damage or death. Always read and understand instruction manual.

Note: Polypropylene vent systems require separate adaptor (field supplied).

2. Before installing clean and lightly sand the end of the ABS/PVC/CPVC plastic vent piping that will connect into the rubber coupling. For polypropylene vent systems follow manufacturer's instructions.
3. Loosen the upper clamp on the rubber coupling and insert the sanded end of the vent piping a full 1-1/4". Do not use glue or sealant in the rubber coupling. Check that there is no stress on the connection or the vent piping that may be caused by twisting or bending.
4. Tighten the upper clamp so that the vent piping is firmly secured in the coupling and is gas tight. Do not over tighten or cause distortion of any of the parts. Ensure the bottom of the rubber coupling is firmly seated on the blower outlet and that the lower gear clamp is also secure. Check to ensure there is no distortion or movement of the clamped assembly once it is completed.

CAUTION

Property Damage Hazard

- Do not overtighten the top and bottom gear clamps of the rubber coupling.
- Do not apply solvent cement or silicone to the rubber coupling connection.

Figure 47 shows the configuration for heaters direct connected to 2" venting.

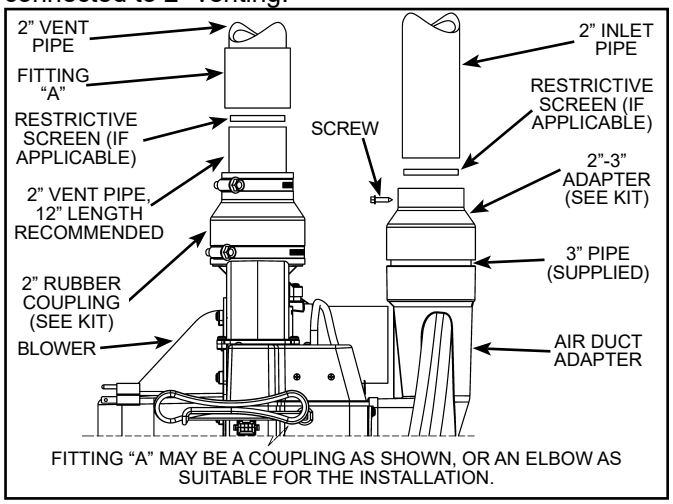

Figure 47.

Figure 48 shows heaters having 3" direct connection to the blower.

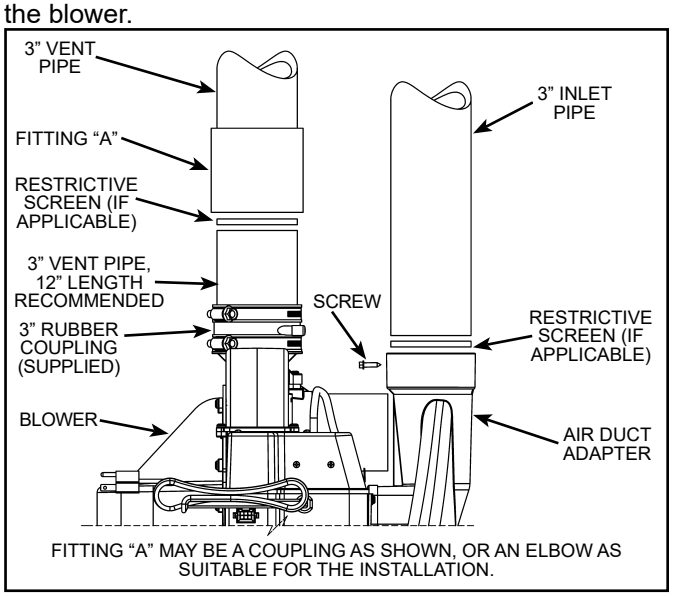

Figure 48.

Figure 49 shows the configuration for heaters connected to 4" venting.

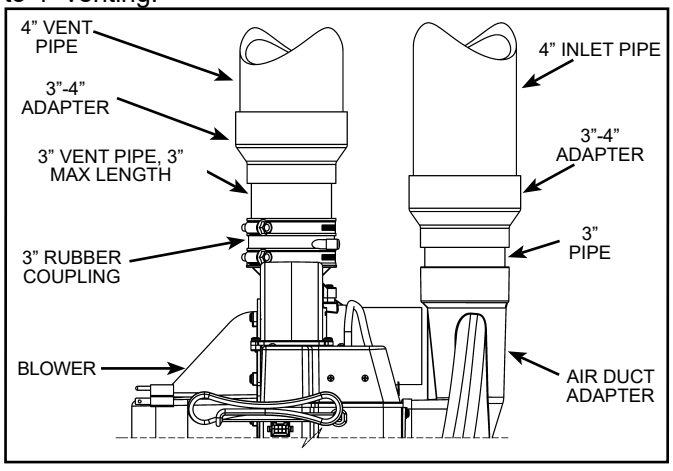

Figure 49.

The restrictive screen (see Figure 41) and the air intake piping should be secured in place with a screw. To prevent damage to the equipment, first position the restrictive screen in place, then drill a pilot hole suitable for the screw being used. The screen must be fully seated and the screw should not interfere with the airflow through it. Once the pilot hole is drilled, place the intake pipe in position and secure in place using the screw (see Figure 47 through Figure 49). Do not use glue to secure this joint in order to allow the screen to be removed for cleaning. The screen in the exhaust piping should be located close to the blower and all exhaust piping joints should be glued.

If the installation requires restrictive screens (see Figure 41) the restrictive screens should be installed near the blower as shown in Figure 47 through Figure 49. If the restrictive screens are installed near the blower, it is recommended that debris screens (see Figure 41) be installed at the terminations.

CONDENSATE (EXHAUST)

In certain conditions, installations in unconditioned space or having long horizontal or vertical vent runs can accumulate condensate. Long lengths of venting that pass through cool/cold areas will experience condensation. The vent pipe should be sloped upwards away from the blower assembly, then adequate means for draining and disposing of the condensate needs to be made by the installer. Condensate formation does not occur in all installations of power direct vented water heaters, but should be drained on installations where it can form in the venting system. Condensation in the venting system of power direct vented water heaters is dependent upon installation conditions including, but not limited to:

- ambient temperature and humidity of installation location,
- ambient temperature and humidity of venting space,
- vent discharge and slope,
- product usage.

If installation conditions cause condensation, install a condensate trap loop approximately 8” in diameter using 3/8” plastic hose. Connect the hose to the built-in drain port of the rubber coupling of the blower assembly (see Figure 50). Loop the hose in a vertical position as shown. The tube loop must be filled with water at least halfway prior to operating the heater. Ensure the end of the tube has access to a drain as condensate will flow from the end. Secure the tubing to the side of the heater. Caution must be used to ensure that drain is free and clear of debris and will not allow backflow through the condensate drain line. Care should be taken to ensure there is no kink or twist in the condensate hose.

- Condensate lines must be free and clear of debris and must not allow back flow through drain line.
- Condensate lines must be able to flow freely to an appropriate drain.
- Do not allow condensate lines to become crimped closed.
- Analyze entire vent system to make sure that condensate will not become trapped in a section of vent pipe and therefore reduce open cross sectional area of vent.

Condensate from this water heater is mildly acidic. Please note that some local codes require that condensate be treated by using a pH neutralizing filter prior to disposal. Condensate neutralizer kits are available. Contact your distributor or Service Agency.

Prior to operating the water heater, make sure the removable cap is installed on the drain port in installations where a drain hose is not needed. **Note:** This cap must remain in place if a drain hose is not installed.

CONDENSATE (INTAKE)

The air intake piping in a direct vent system will normally not have any moisture accumulation in it. However, in certain cases, moisture may build up and needs to be drained. Typical situations include, but are not limited to:

- cold outdoor temperature, particularly if the air inlet is short,
- high outdoor humidity,
- heater being used mostly for space heating and
- air inlet pipe has vertical rise near the heater.

Installations with any of these conditions are required to provide a moisture drain with a trap that flows to a waste drain (see Figure 50). A horizontal section of the air inlet pipe, near the heater should include a suitable tee and a hose barb fitting to drain the water. The tee should be as close to the heater as is practical. Install a condensate trap loop approximately 8” in diameter using 3/8” plastic hose. Connect the hose to the tee. Loop the hose in a vertical position as shown Figure 50 and flow to an appropriate waste drain. The air intake drain line must be entirely separate from the exhaust vent outlet condensate line.

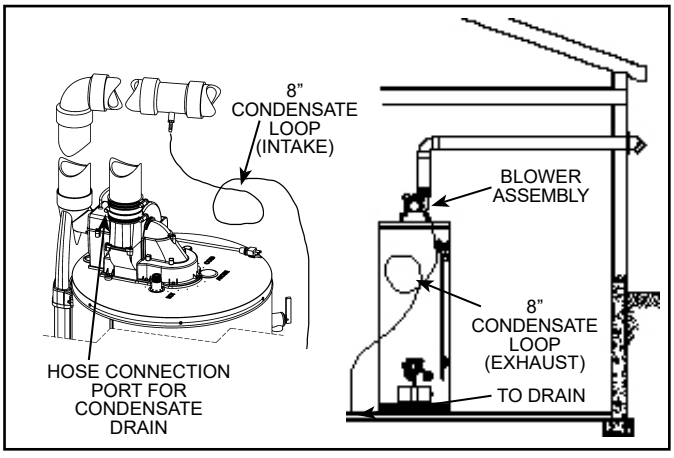

Figure 50.

INSTALLATION CHECKLIST

Note: Use and complete this checklist before lighting the heater. Correct any conditions that do not meet these instructions.

Water Heater Location

- ❑ Centrally located with the water piping system. Located as close to gas piping and vent pipe system as possible.
- ❑ Located indoors and in a vertical position. Protected from freezing temperatures.
- ❑ Proper clearances from combustible surfaces maintained and not installed directly on a carpeted floor.
- ❑ Provisions made to protect the area from water damage. Metal drain pan installed and piped to an adequate drain.
- ❑ Installation area free of corrosive elements and flammable material.
- ❑ Sufficient room to service the water heater.

Gas Supply And Piping

- ❑ Gas supply is the same type as listed on the water heater data plate.
- ❑ Gas line equipped with shut-off valve, union and sediment trap.
- ❑ Approved pipe joint compound used.
- ❑ Adequate pipe size and of approved material.
- ❑ Chloride-free soap and water solution or other approved means used to check all connections and fittings for possible gas leaks.

Vent Pipe System

- ❑ Vent pipe and fittings of approved material.
- ❑ Acceptable size, length and number of elbows on exhaust vent system.
- ❑ Installed in accordance with prevailing provisions of local codes, or in the absence of such, the latest edition of **"National Fuel Gas Code", ANSI Z223.1/ NFPA 54**.
- ❑ Horizontal piping slopes at an upward pitch of 1/8" rise per 5' away from the water heater.
- ❑ Not obstructed in any way.
- ❑ Means installed to collect, neutralize (if required) and dispose of condensate.

Vent Termination
Horizontal

- ❑ 12" min. above grade/snow level.
- ❑ Away from corners, other vents, windows etc.

Vertical

- ❑ Air Intake and Exhaust terminations 18" min. above roof/snow level.

Water System Piping

- ❑ Temperature and Pressure relief valve properly installed with a discharge line run to an open drain and protected from freezing.
- ❑ All piping properly installed and free of leaks.
- ❑ Heater completely filled with water.
- ❑ Closed system pressure build-up precautions installed.

Electrical Connections

- ❑ Unit connected to a 120V electrical supply. A dedicated circuit is preferred. Do not use a GFI outlet.
- ❑ Proper polarity.
- ❑ Water heater properly grounded.
- ❑ Installed in accordance with prevailing provisions of local codes, or in the absence of such, the latest edition of **"National Electrical Code" (NFPA 70)**.

After all actions on checklist are checked/ completed, read the Lighting Instructions and proceed with lighting the heater.

LIGHTING INSTRUCTIONS

Read and understand these directions thoroughly before attempting to operate the water heater. Make sure the burner viewport is not missing or damaged. Make sure the tank is completely filled with water before operating the water heater. The gas control valve/thermostat has an “On/Off Switch” and must be turned on before the water heater is operational. Check the label on the front of the water heater near the gas control valve/thermostat for the correct gas. Do not start this water heater with any gas other than the one listed on the label. If you have any questions or doubts, consult the gas supplier or gas utility company. The following Lighting Instruction label appears on the front of the water heater.

This heater is equipped with a Honeywell gas control/ thermostat and a hot-surface igniter. This control is a combination gas valve, thermostat and ignition controller for use on this power vented water heater. The valve contains a micro-controller that supervises the ignition sequence and monitors the temperature settings and operation of the heater. The controller also monitors the flammable vapor safety features of this heater.

This heater is equipped with a hot-surface ignition system that automatically ignites the burner. Do not attempt to light this heater manually with a match or flame-producing device.

FOR YOUR SAFETY READ BEFORE LIGHTING

WARNING: If you do not follow these instructions exactly, a fire or explosion may result causing property damage, personal injury or loss of life.

FLAMMABLE

BEFORE OPERATING: ENTIRE SYSTEM MUST BE FILLED WITH WATER AND AIR PURGED FROM ALL LINES.

A. This appliance does not have a pilot. It is equipped with an ignition device which automatically lights the burner. **Do NOT try to light the burner by hand.**

B. BEFORE OPERATING smell all around the appliance area for gas. Be sure to smell next to the floor because some gas is heavier than air and will settle on the floor.
WHAT TO DO IF YOU SMELL GAS:
- Do not try to light any appliance.
- Do not touch any electric switch; Do not use any phone in your building.
- Immediately call your gas supplier from a neighbor's phone. Follow the gas suppliers instructions.
- If you cannot reach your gas supplier, call the fire department.

C. Use only your hand to turn the gas control buttons. Never use tools. If the control buttons will not turn, don't try to repair them, call a qualified service technician. Force or attempted repair may result in a fire or explosion.

D. Do not use this appliance if any part has been under water. Immediately contact a qualified installer or service agency to replace a flooded water heater. Do not attempt to repair the unit. It must be replaced!

OPERATING INSTRUCTIONS

1. STOP! Read the safety information above on this label.
2. Turn off all electric power to the appliance.
3. Turn the thermostat counter-clockwise to the lowest setting.
4. Set the switch on the control to the “OFF” position.
5. Do not attempt to light manually.
6. Wait five (5) minutes to clear out any gas. If you then smell gas, STOP! Follow “B” in the safety information above on this label. If you don't smell gas, go the next step.

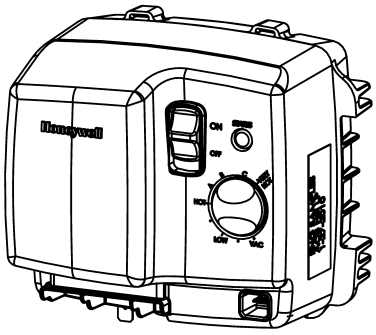

7. Turn on all electric power to the appliance.
8. Set the switch on the control to the “ON” position.
9. Turn thermostat to desired setting.

DANGER Hotter water increases the risk of scald injury. Consult the instruction manual before changing temperature.

10. If the appliance will not operate, follow the instructions “To Turn Off Gas To Appliance” and call your service technician or gas supplier.

TO TURN OFF GAS TO APPLIANCE

1. Turn the thermostat counter-clockwise to the lowest setting.
2. Set the gas control switch to the “OFF” position.
3. Turn off electrical power to the appliance if service is to be performed.

323546-000

OPERATING THE TEMPERATURE CONTROL SYSTEM

It is recommended that lower water temperatures be used to avoid the risk of scalding. It is further recommended, in all cases, that the water temperature be set for the lowest temperature which satisfies your hot-water needs. This will also provide the most energy efficient operation of the water heater.
Short repeated heating cycles caused by small hot-water uses can cause a temperature increase of the hot water by 20F° higher than the heater's temperature settings. If you experience this type of use you should consider using lower temperature settings to reduce scald hazards.

Should overheating occur or the gas supply fails to shut off, turn off the main manual gas shut off valve to the appliance (see Figure 1).

⚠ DANGER

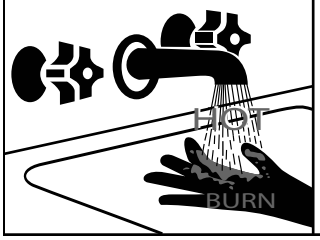

Water temperature over 125°F can cause severe burns instantly resulting in severe injury or death.

Children, the elderly and the disabled are at highest risk of scald injury.

Feel water before bathing or showering.

Temperature limiting devices such as mixing valves must be installed when required by codes and to ensure safe temperatures at fixtures.

HOT WATER CAN SCALD:
Water heaters are intended to produce hot water. Water heated to a temperature which will satisfy space heating, clothes washing, dish washing, cleaning and other sanitizing needs can scald and permanently injure you upon contact. Some people are more likely to be permanently injured by hot water than others. These include the elderly, children, the infirm, or physically/ mentally handicapped. If anyone using hot water fits into one of these groups or if there is a local code or state law requiring certain temperature water at the hot-water tap, then you must take special precautions. In addition to using lowest possible temperature setting that satisfies your hot water needs, a means such as a mixing valve, should be used at hot-water taps used by these people or at the water heater (see Figure 7 and Figure 8). Follow manufacturer's instructions for installation of the valves. Before changing the factory setting on the thermostat, in this manual, see Table 9.

The water heater should be located in an area where the general public does not have access. If a suitable area is not available, a cover should be installed over the thermostat to prevent tampering.

This water heater is equipped with an adjustable thermostat to control water temperature (see Figure 51). Hot water temperatures required for automatic dishwasher and laundry use can cause scald burns resulting in serious personal injury and/or death. The temperature at which injury occurs varies with the person's age and time of the exposure. The slower response time of children, aged or disabled persons increases the hazards to them. Never allow small children to use a hot-water tap, or to draw their own bath water. Never leave a child or disabled person unattended in a bathtub or shower.

The hot setting shown on the dial is approximately 120°F. This is a good starting point to set the temperature.

Setting the water heater temperature at 120°F will reduce the risk of scalds.

The thermostat settings on the gas control valve are shown in Figure 51.

The water temperature setting was factory set at the lowest (VAC) temperature setting.

GAS CONTROL VALVE/THERMOSTAT

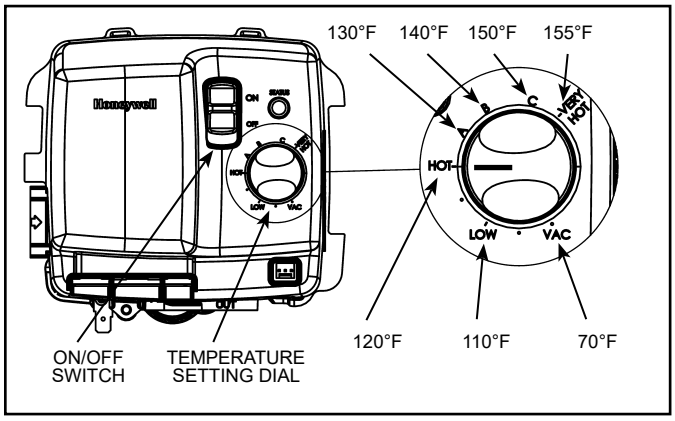

Figure 51.

Temperature Dial Setting	Approximate Temperature °F	Time to induce a 2nd and 3rd Degree burn to adult skin
VERY HOT	155	Less than 1 second
C	150	About 1.5 seconds
B	140	Less than 5 seconds
A	130	More than 30 seconds
HOT	120	More than 5 minutes
LOW	110	Normal shower temp
VAC	70	N/A

Table 9.

Note: The temperatures indicated are approximate. The actual temperature of the heated water may vary.
The Vacation Setting (VAC) sets the controller at approximately 70°F. This setting is recommended when the water heater is not in use for a long period of time. This effectively turns the controller temperature setting down to a temperature that prevents the water in the water heater from freezing while still conserving energy.

FOR YOUR INFORMATION

START UP CONDITIONS

Condensation

Whenever the water heater is filled with cold water, some condensate will form while the burner is ON. A water heater may appear to be leaking when in fact the water is condensate. This usually happens when:

a. A new water heater is filled with cold water for the first time.
b. Burning gas produces water vapor in water heaters, particularly high efficiency models where flue temperatures are lower.
c. Large amounts of hot water are used in a short time and the refill water in the tank is very cold.

Moisture from the products of combustion condense on the cooler tank surfaces and form drops of water which may fall onto the burner or other hot surfaces to produce a “sizzling” or “frying” noise.

Because of the suddenness and amount of water, condensate water maybe diagnosed as a “tank leak”. After the water in the tank warms up (about 1-2 hours), the condition should disappear.

Do not assume the water heater is leaking until there has been enough time for the water in the tank to warm up.

An undersized water heater will cause more condensation. The water heater must be sized properly to meet the family’s demands for hot water including dishwashers, washing machines and shower heads.

Excessive condensate maybe noticed during the winter and early spring months when incoming water temperatures are at their lowest.

Good venting is essential for a gas fired water heater to operate properly as well as to carry away products of combustion and water vapor (see also "Condensate (Exhaust)" section).

Smoke/Odor

It is not uncommon to experience a small amount of smoke and odor during the initial start-up. This is due to burning off of oil from metal parts, and will disappear in a short while.

Strange Sounds

Possible noises due to expansion and contraction of some metal parts during periods of heat-up and cool-down do not necessarily represent harmful or dangerous conditions. Condensation causes sizzling and popping within the burner area during heating and cooling periods and should be considered normal.

OPERATIONAL CONDITIONS

Smelly Water

Each water heater contains at least one anode rod for corrosion protection of the tank. Certain water conditions will cause a reaction between this rod and the water. The most common complaint associated with the anode rod is one of a “rotten egg smell” in the hot water. The smell is a result of four factors which must all be present for the odor to develop:

a. A concentration of sulfate in the supply water.
b. Little or no dissolved oxygen in the water.
c. A sulfate reducing bacteria which has accumulated within the water heater (this harmless bacteria is nontoxic to humans).
d. An excess of active hydrogen in the tank. This is caused by the corrosion protective action of the anode.

Smelly water may be eliminated or reduced in some water heater models by replacing the anode(s) with one of less active material, and then chlorinating the water heater tank and all water lines. Contact the local water heater supplier or service agency for further information concerning an Anode Replacement Kit and this chlorination treatment.

If the smelly water persists after the anode replacement and chlorination treatment, we can only suggest that chlorination or aeration of the water supply be considered to eliminate the water problem.

Do not remove the anode leaving the tank unprotected. By doing so, all warranty on the water heater tank is voided.

“AIR” IN HOT-WATER FAUCETS

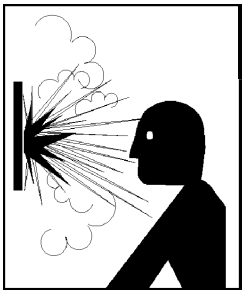

⚠ WARNING

Explosion Hazard

- Flammable hydrogen gases may be present.
- Keep all ignition sources away from faucet when turning on hot water.

HYDROGEN GAS: Hydrogen gas can be produced in a hot-water system that has not been used for a long period of time (generally two weeks or more). Hydrogen gas is extremely flammable and explosive. To prevent the possibility of injury under these conditions, it is recommended that the hot-water faucet, located farthest away, be opened for several minutes before any electrical appliances which are connected to the hot-water system are used (such as a dishwasher or washing machine). If hydrogen gas is present, there will probably be an unusual sound similar to air escaping through the pipe as the hot-water faucet is opened. There must be no smoking or open flame near the faucet at the time it is open.

PERIODIC MAINTENANCE

GENERAL UPKEEP

Make it a habit to look around the heater, the vent piping, and the hot and cold water pipes. Do not allow any material to be piled up against the heater. Do not place any object on top of the vent pipes.

Every 3 - 6 months or as necessary:

- Clean lint from blower, top of heater.

Once per year:

- Inspect the Vent System.
- Burner Operation and Inspection.
- Combustion Chamber for scaling or sooting.
- Temperature-Pressure Relief Valve Test.
- Anode Rod Inspection.
- Flush a pail of water from the heater drain valve, once per year.

If any deficiencies or abnormalities are encountered during these inspections call a qualified service technician.

Flood damage to a water heater may not be readily visible or immediately detectable. However, over a period of time a flooded water heater will create dangerous conditions which can cause death, serious bodily injury, or property damage. Contact a qualified installer or service agency to replace a flooded water heater. Do not attempt to repair the unit! It must be replaced!

VENTING SYSTEM INSPECTION

⚠ WARNING

Breathing Hazard - Carbon Monoxide Gas

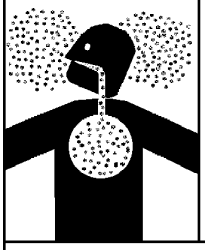

- Flue gases may escape if vent pipe is not properly connected.
- Be alert for obstructed, sooted or deteriorated vent system to avoid serious injury or death.
- Do not store corrosive chemicals in vicinity of water heater.
- Chemical corrosion of flue and vent system can cause serious injury or death.
- Analyze the entire vent system to make sure that condensate will not become trapped in a section of vent pipe and therefore reduce the open cross sectional area of the vent.

Breathing carbon monoxide can cause brain damage or death. Always read and understand instruction manual.

At least once a year a visual inspection should be made of the venting system. You should look for:

- Obstructions which could cause improper venting. The combustion, dilution and ventilation air flow must not be obstructed.
- Damage or deterioration which could cause improper venting or leakage of combustion products.

Be sure the vent piping is properly connected to prevent escape of dangerous flue gases which could cause deadly asphyxiation.

Obstructions and deteriorated vent systems may present serious health risk or asphyxiation.

Chemical vapor corrosion of the flue and vent system may occur if air for combustion contains certain chemical vapors. Spray can propellants, cleaning solvents, refrigerator and air conditioner refrigerants, swimming pool chemicals, calcium and sodium chloride, waxes, bleach and process chemicals are typical compounds which are potentially corrosive.

If after inspection of the vent system you found sooting or deterioration, something is wrong. Call the local gas utility to correct the problem and clean or replace the flue and venting before resuming operation of the water heater.

BURNER OPERATION AND INSPECTION

At least once a year a visual inspection should be made of the main burner and the hot surface igniter assembly for proper flame characteristics and ignition sequences. This can be done by removing the outer door and viewing the main burner operation through the viewport on the inner door (see Figure 52). The main burner should provide complete combustion of gas, ignite rapidly, give reasonably quiet operation, and cause no excessive flame lifting from the burner ports. If the proper flame characteristics are not evident (see Figure 53), make sure that the flow of combustion and ventilation air is not blocked. Inspection of exhaust/air intake termination is needed to ensure there is no blockage there.

You should also check for sooting. Soot is not normal and will impair proper combustion. A visual inspection of the main burner and hot surface igniter should also be done at least once a year (see Figure 52).

Soot build-up indicates a problem that requires correction before further use. Turn “OFF” gas to water heater by unplugging the power cord and leave off until repairs are made. Failure to correct the cause of the sooting can result in a fire causing death, serious injury, or property damage.

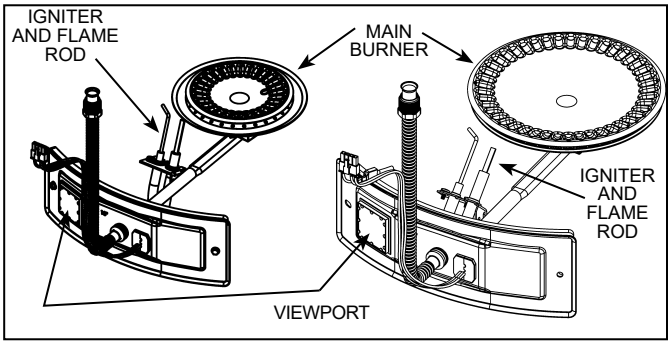

Figure 52.

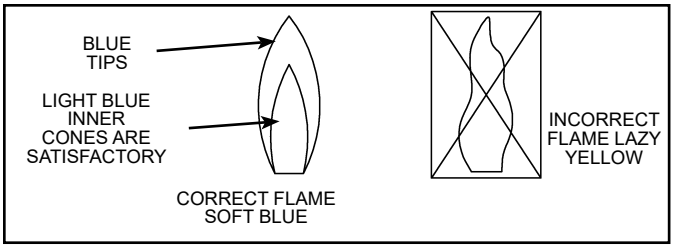

Figure 53.

COMBUSTION CHAMBER AND BURNER CLEANING

In the event your burner or burner air openings require cleaning, Call your service agency to remove and clean the burner and correct the problem that required the burner to be cleaned.

HOUSEKEEPING

⚠ DANGER



Fire and Explosion Hazard

- Do not place chemical vapor emitting products near air intake and exhaust terminations.
- Do not use or store flammable vapor products such as gasoline, solvents or adhesives in the same room or area near water heater or other appliance.
- Can cause serious injury or death.

INSTALLED IN SUITABLE AREA:
To ensure sufficient ventilation and combustion air supply, proper clearances from the water heater must be maintained. See "Locating The New Water Heater" section. Combustible materials such as clothing, cleaning materials, or flammable liquids, etc. must not be placed against or adjacent to the water heater which can cause a fire.

TEMPERATURE-PRESSURE RELIEF VALVE TEST

⚠ DANGER

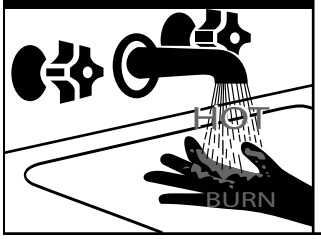

- Burn hazard.
- Hot water discharge.
- Keep clear of temperature-pressure relief valve discharge.

It is recommended that the temperature-pressure relief valve be checked to ensure it is in operating condition at least once a year.

When checking the temperature-pressure relief valve operation, make sure that (1) no one is in front of or around the outlet of the T&P valve discharge line, and (2) that water discharge will not cause any property damage, as water may be extremely hot. Use care when operating valve as the valve may be hot.
To check the relief valve, lift lever at the end of valve several times (see Figure 54). The valve should seat properly and operate freely.
If after manually operating the valve, it fails to completely reset and continues to release water, immediately close the cold-water inlet to the water heater and drain the water heater, see "Draining And Flushing" section. Replace the T&P valve with a properly rated/sized new one, see "Temperature-Pressure Relief Valve" for instructions on replacement.

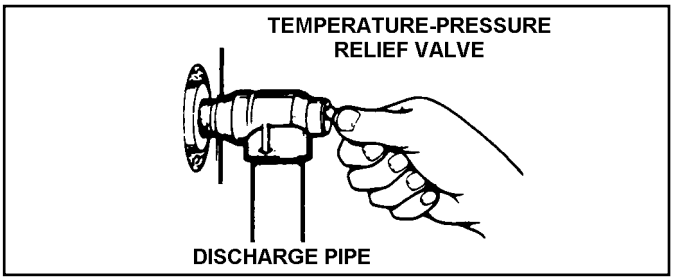

Figure 54.

If the Temperature-Pressure Relief Valve on the water heater weeps or discharges periodically, it may be due to thermal expansion.
Note: Excessive water pressure is the most common cause of temperature-pressure relief valve leakage. Excessive water system pressure is most often caused by “thermal expansion” in a “closed system.” See "Closed Water Systems" and "Thermal Expansion" sections of this manual. The T&P valve is not intended for the constant relief of thermal expansion.

Temperature-pressure relief valve leakage due to pressure build up in a closed system that does not have a thermal expansion tank installed is not covered under the Limited Warranty. Thermal expansion tanks must be installed on all closed water systems.

⚠ WARNING

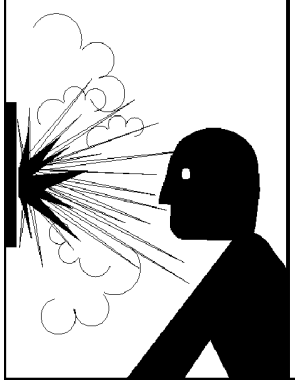

Explosion Hazard

- Temperature-pressure relief valve must comply with ANSI Z21.22-CSA4.4 and ASME code.
- Properly sized temperature-pressure relief valve must be installed in opening provided.
- Do not plug, block, or cap the discharge line.
- Failure to follow this warning can result in excessive tank pressure, serious injury or death.

DRAINING AND FLUSHING

Periodic draining and cleaning of sediment from the tank maybe necessary. It is recommended that the tank be drained and flushed every 6 months to remove sediment which may build up during operation. The water heater should be drained if being shut down during freezing temperatures. See "Typical Installation" section in this manual for location of the water heater components described below.

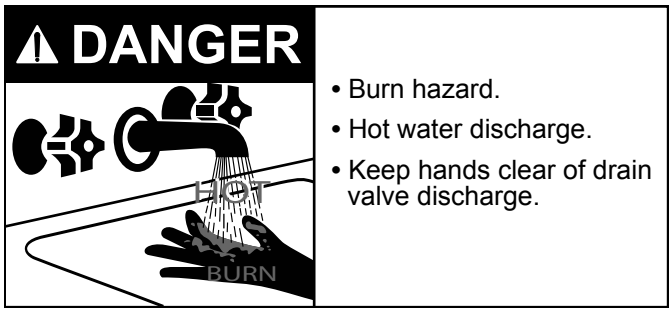

To Drain The Water Heater Storage Tank

1. Turn “OFF” the electrical supply to the water heater.
2. Turn “OFF” the gas supply at the Main Gas shut-off Valve.
3. Open a hot water faucet and let the hot water run until it is cool (This may take 10 minutes or longer).

Warning: Be sure the water runs cool before draining the tank to reduce the risk of scalding.

4. Connect a garden hose to the drain valve and place the other end of the hose in an adequate drain, outside, or in buckets. Note that sediment in the bottom of the tank may clog the valve and prevent it from draining. If you can’t get the tank to drain, contact a qualified person.
5. CLOSE the cold-water inlet valve to the water heater.
6. Open the drain valve on the water heater.
7. If not already done, open a hot water faucet to help the water in the tank drain faster.
8. If a large amount of sediment was present when the tank was drained, follow instructions in the "To Flush The Water Heater Storage Tank" section.
9. Close the water heater drain valve when all water in the storage tank has drained and remove the hose.
10. Follow instructions in the "Filling The Water Heater" section.
11. Follow the lighting instructions on the label or see "Lighting Instructions" to restart the water heater.

Note: If the water heater is going to remain shut down and empty for an extended period, the drain valve should be left open with hose connected allowing water to terminate to an adequate drain.

To Flush The Water Heater Storage Tank

Follow Step 1 through Step 7 in the "To Drain The Water Heater Storage Tank" section.

1. Flush the tank by opening the cold water supply valve and letting the water run until no more sediment drains from the tank.
2. Close the water heater drain valve when flushing is completed and remove the drain hose.
3. Ensure the heater is full of water.
4. Follow instructions in the "Filling The Water Heater" section.
5. Follow the lighting instructions on the label or see "Lighting Instructions" to restart the water heater.

Caution: Do not turn on power to the water heater unless the tank is full. Open a hot-water faucet and allow the water to run until the air is purged and the water flows uninterrupted from the faucet.

Important: When operating a cold tank, condensation can occur and drip on the burner. This should not be confused with a tank leak.

ANODE ROD MAINTENANCE

CAUTION

Property Damage Hazard

- Avoid water heater damage.
- Inspection and replacement of anode rod required.

The anode rod is a sacrificial metal rod that helps avoid corrosion and premature failure (leaks) in the tank. The anode rod is a consumable item. Inspect the anode rod after the first six months of operation when you drain and flush the tank. Replace the anode rod if it is substantially worn out or depleted (see Figure 55). Thereafter, inspect the anode rod annually or more frequently if needed. If you use a water softener, your anode rod will deplete faster than normal. Inspect the anode rod more frequently, replacing the anode rod if it is depleted. Once the anode rod is depleted, the tank will start to corrode, eventually developing a leak. Obtain a new anode rod from your local plumbing supplier or have a qualified person replace it. (Anode rods are a consumable item and are not covered under warranty).

Certain water conditions will cause a reaction between the anode rod and the water. The most common complaint associated with the anode rod is a “rotten egg smell” produced from the presence of hydrogen sulfide gas dissolved in the water. The removal of the anode rod requires a 1-1/16” socket.

Important: Do not operate the water heater without a functioning anode rod as this will void any warranties. A special anode rod may be available if water odor or discoloration occurs.

Note: This rod may reduce but not eliminate water odor problems. The water supply system may require special filtration equipment from a water conditioning company to successfully eliminate all water odor problems.

To replace the anode:

1. Turn “OFF” the electrical supply to the water heater.
2. Turn “OFF” the gas supply at the Main Gas shut-off Valve.
3. CLOSE the cold-water inlet valve to the water heater.
4. OPEN a nearby hot-water faucet and leave open to allow for draining.
5. Drain approximately 5 gallons of water from tank. (Refer to "Draining And Flushing" for proper procedures). Close drain valve.
6. Remove old anode rod.
7. Use Teflon® tape or approved pipe sealant on threads and install new anode rod.
8. Remove the hose and follow instructions in the "Filling The Water Heater" section.
9. Follow the lighting instructions on the label or see "Lighting Instructions" to restart the water heater.

See Figure 56 for anode rod location.

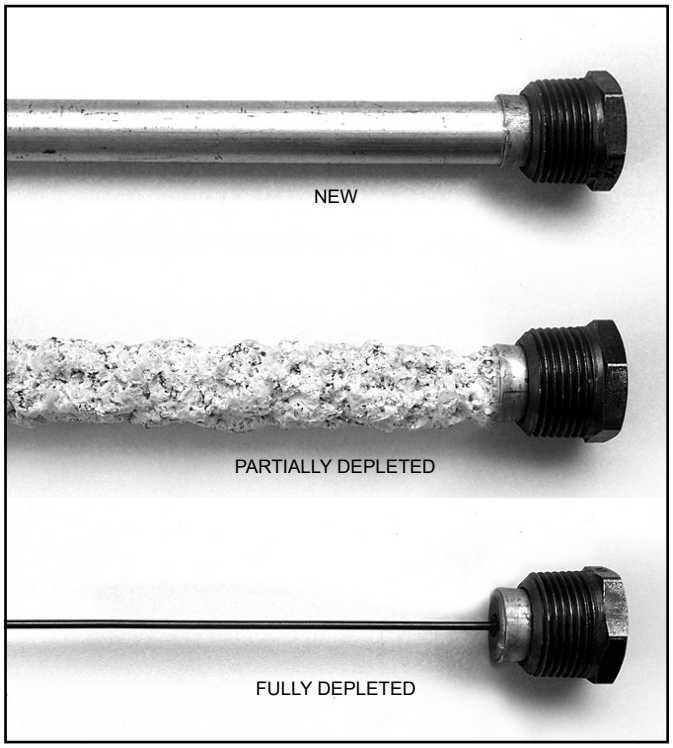

Figure 55.

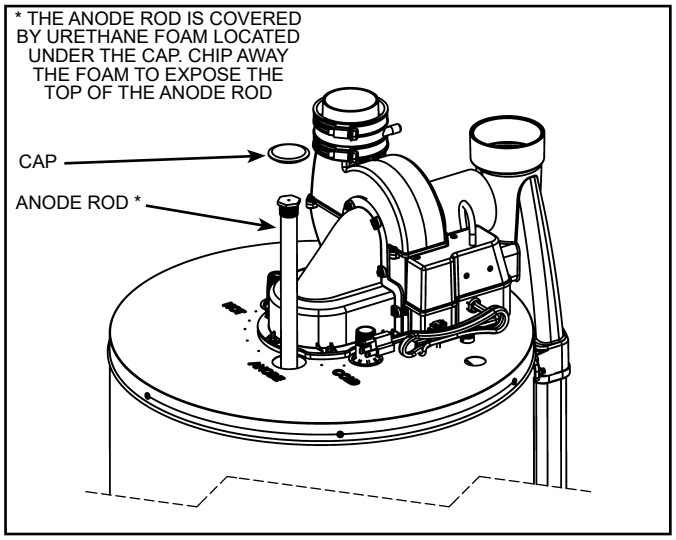

Figure 56.

LEAKAGE CHECKPOINTS

SERVICE

If a condition persists or you are uncertain about the operation of the water heater contact a service agency. Use this guide to check a “leaking” water heater. Many suspected “leakers” are not leaking tanks. Often the source of the water can be found and corrected.

If you are not thoroughly familiar with gas codes, your water heater and safety practices, contact your gas supplier or qualified installer to check the water heater.

Ensure the venting is properly attached and secured.

Never use this water heater unless it is completely filled with water. To prevent damage to the tank, the tank must be filled with water. Water must flow from the hot-water faucet before turning “ON” gas to the water heater.

A. Water at the blower assembly is water vapor which has condensed out of the combustion products. This is caused by a problem in the vent. A drainage port is included at the vent pipe connection.
B. *Condensation may be seen on pipes in humid weather or pipe connections may be leaking.
C. *The anode rod fitting may be leaking.
D. Small amounts of water from temperature-pressure relief valve may be due to thermal expansion or high water pressure in your area.
E. *The temperature-pressure relief valve may be leaking at the tank fitting.
F. Water from a drain valve may be due to the valve being slightly opened.
G. *The drain valve may be leaking at the tank fitting.
H. Combustion products contain water vapor which can condense on the cooler surfaces of the tank. Droplets form and drip onto the burner. This is common at the time of start-up after installation and when incoming water is cold.
I. Water in the water heater bottom may be from condensation, loose connections, or the relief valve. DO NOT replace the water heater until a full inspection of all possible water sources is made and necessary corrective steps taken.

Leakage from other appliances, water lines, or ground seepage should also be checked.

* To check where threaded portion enters tank, insert cotton swab between jacket opening and fitting. If cotton is wet, follow the instructions in the "Draining And Flushing" section and then remove fitting. Put pipe dope or Teflon® tape on the threads and replace. Then follow the instructions in the "Filling The Water Heater" section.



⚠ WARNING

Read and understand instruction manual and safety messages before installing, operating or servicing this water heater.

Failure to follow instructions and safety messages could result in death or serious injury.

Instruction manual must remain with water heater.

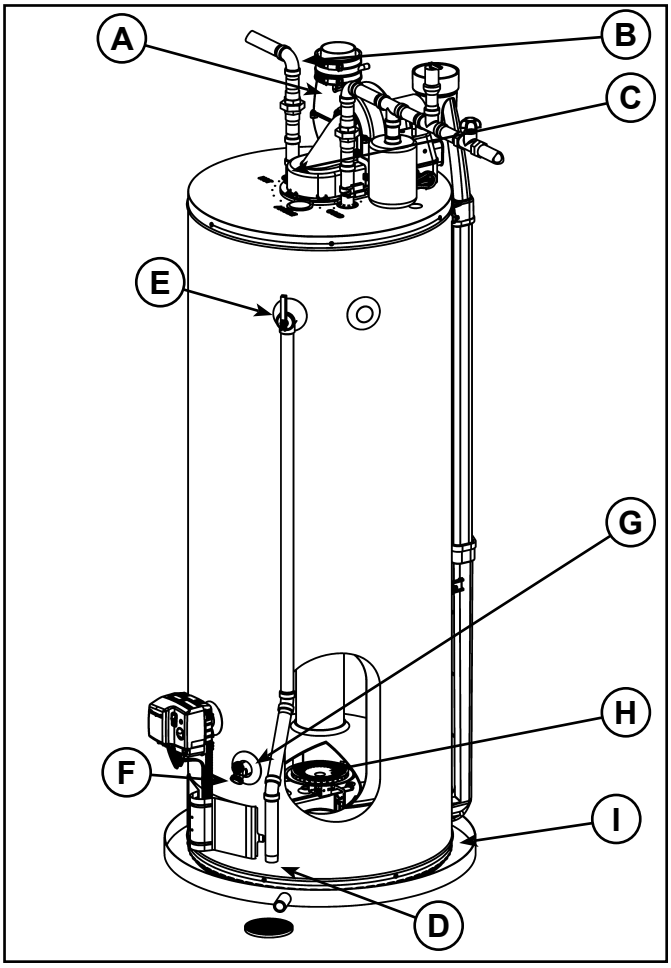

Figure 57.

REFERENCE PARTS LISTING

Replacement parts may be ordered through your plumber or the local distributor. When ordering replacement parts, always have the following information ready:

1. Model, Serial and Product number
2. Type of gas
3. Item number
4. Parts description

1 Termination Elbow with Vent Screen
2 *Vent Pipe
3 *Vent Pipe Elbow (long radius)
5 Cold-Water Inlet Nipple/Diptube
6 **Combo Heating System Supply Outlet (Optional)
7 T&P Valve
8 *Discharge Pipe
9 **Combo Heating System Return Inlet (Optional)
10 Gas Control Valve/Thermostat (Honeywell)
11 Drain Valve
12 Outer Gas Door
13 Manifold Door Assembly (behind outer door) (see Figure 3 & Figure 4) (see also Figure 60 & Figure 61)
14 *Metal Drain Pan
15 *Floor Drain
22 Anode (under cap)
23 Baffle Assembly
24 Hot-Water Outlet Nipple/Anode
26 ****Rubber Coupling (see Figure 5) (see also Figure 62)
27 Gear Clamp (see Figure 5) (see also Figure 62)
28 ***Blower with Power Cord (see Figure 5) (see also Figure 62)
29 Air Duct Adapter
30 Air Inlet Snorkel
31 Air Duct
33 Flame Sensor Rod (see Figure 3 & Figure 4) (see also Figure 60 & Figure 61)
34 Sheet Metal Burner (see Figure 3 & Figure 4) (see also Figure 60 & Figure 61)
35 Gas Orifice (see Figure 3 & Figure 4) (see also Figure 60 & Figure 61)
36 Gas Manifold (see Figure 3 & Figure 4) (see also Figure 60 & Figure 61)
37 Hot-Surface Igniter (see Figure 3 & Figure 4) (see also Figure 60 & Figure 61)
38 Manifold Door Gasket (see Figure 3 & Figure 4) (see also Figure 60 & Figure 61)
39 Manifold Door (see Figure 3 & Figure 4) (see also Figure 60 & Figure 61)
40 Two Piece Grommet With Clip (see Figure 3 & Figure 4) (see also Figure 60 & Figure 61)
41 Viewport (see Figure 3 & Figure 4) (see also Figure 60 & Figure 61)
42 Air Tubing (Intake) (see Figure 5) (see also Figure 62)
43 Blower High Limit Switch (see Figure 5) (see also Figure 62)
44 Intake Air Pressure Switch (NC) (inside box) (see Figure 5) (see also Figure 62)
45 Capacitor (see Figure 5) (see also Figure 62)
46 Air Tubing (Exhaust) (see Figure 5) (see also Figure 62)
47 Exhaust Air Pressure Switch (NO) (inside box) (see Figure 5) (see also Figure 62)

*, **, ***, **** see notes on following page.

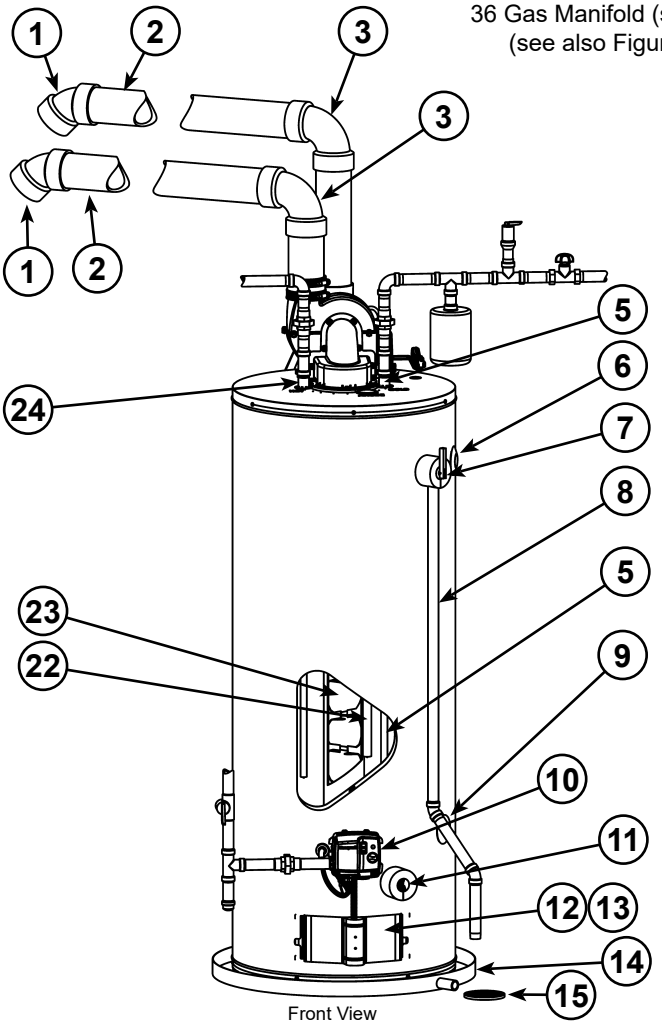

Front View

Figure 58.

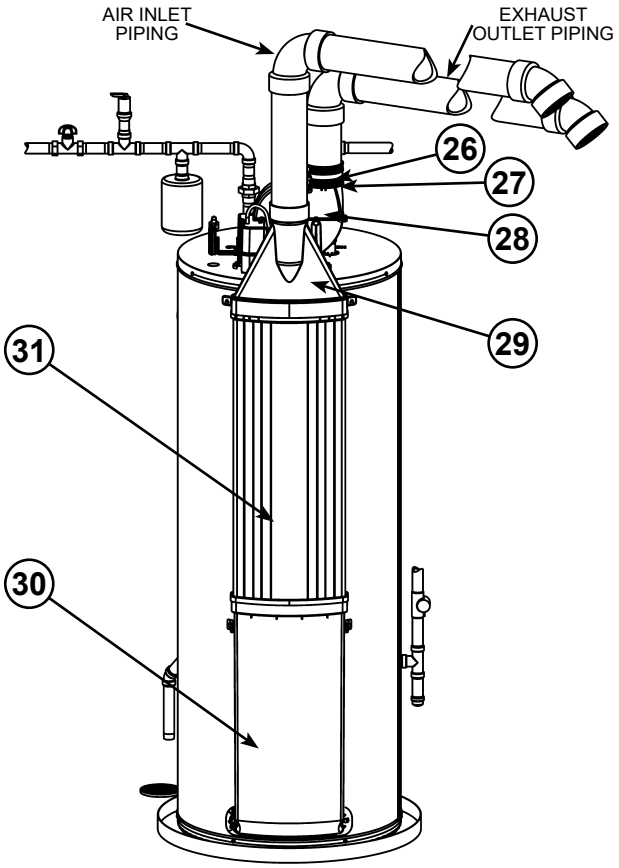

Rear View

Figure 59.

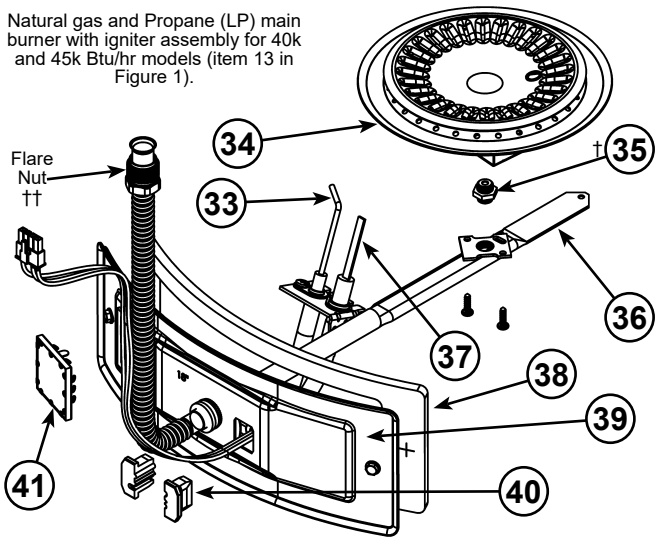

Figure 60.

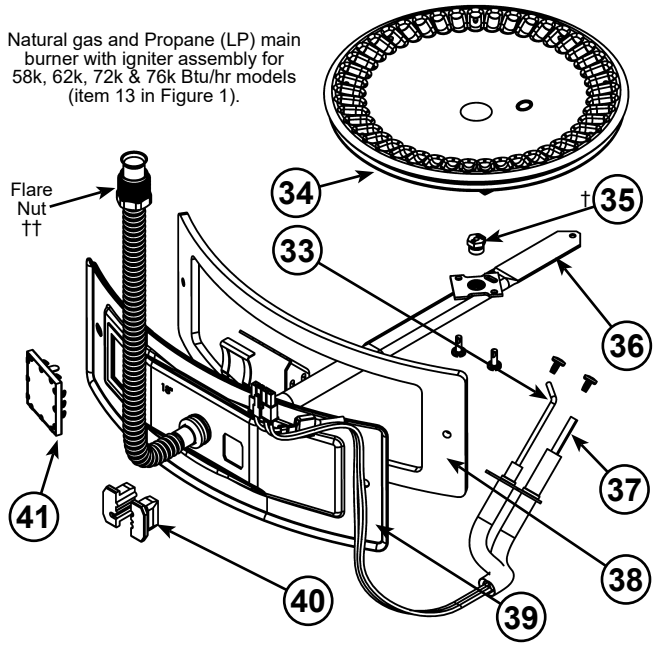

Figure 61.

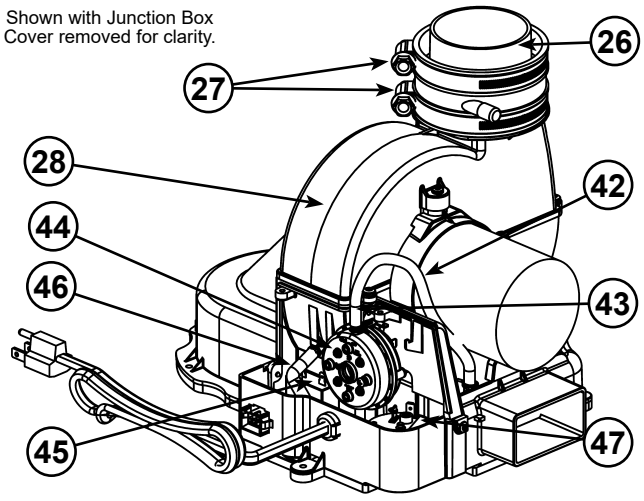

Figure 62.

Notes:

* Items not supplied with the water heater.

** The side recirculation loop connections may not be used as the primary water inlet and outlet connections. See "Combo Heating Inlet And Outlet Side Taps".

*** **Caution:** harness has 120 VAC during operation.

**** See "Vent Pipe Installation" for more information.

† The orifice on Natural gas models has Right-hand thread, the orifice on Propane (LP) models has Left-hand thread.

†† For Natural gas models the Flare Nut has Right-hand thread. For Propane (LP) models the Flare Nut has Left-hand thread.

TROUBLESHOOTING GUIDELINES

These guidelines should be utilized by a qualified service agent.

LOCKOUTS

Soft Lockout

- Occurs when a system safety device trips to break the sequence of operation. The control will try to start the system in a timed basis but will not reinstate operation until the failure is corrected.

Hard Lockout

- Occurs when the main controller fails and must be replaced.

RESETTING THE HEATER CONTROL

- Soft lockouts as diagnosed by the system error codes require the gas control to be reset.
- To reset the control, slide the “ON/OFF” switch to the “OFF” position. Wait for 10 seconds and move the switch back to the “ON” position.
- If the problem that caused the control to lock out has not been corrected, the control will remain or again go back into lockout.

IGNITION STATE AND TIMING

IGNITION STATE	TIMING
Pre-purge	5 seconds (NG models)
	15 seconds (LP models)
Hot Surface Igniter (HSI) Warmup	10 seconds
Ignition Activation Period (IAP)	3.5 seconds maximum
Flame Recognition Period (FRP)	0.5 second
Trial For Ignition	IAP + FRP
Flame Stabilization Period	Not Applicable
Inter-purge	30 seconds
Flame Failure Response Time	2 seconds max (@ 1uA flame current)
Post-purge	30 seconds
Pressure Switch (PS) Prove Period	2 minutes
Pressure Switch (PS) Fault Delay (failed open/closed)	2 minutes
Soft Lockout	20 minutes
Energy Cut Off (ECO) Limit Lockout	Indefinite

SYSTEM STATUS AND ERROR CODES

The micro-controller inside the gas control monitors the ignition sequence, temperature settings, and overall operation of the heater. If any of these parameters does not operate properly the controller will shut down the water heater, diagnose the failure and flash an error code. The table below lists the System Status Codes for the Honeywell control. Refer to it and to the "Ignition State And Timing" to diagnose the problem before attempting corrective action.

LED Flash Sequence	Control Status	Corrective Action Number
Short flash once every four seconds	IDLE (no call for heat, no fault conditions)	1
“Heartbeat”, alternates bright/dim	Call For Heat (no fault conditions)	2
One Flash, three second pause	Low Flame Signal (control continues to operate)	3
Two Flash, three second pause	Pressure Switch Failed Closed	4
Three Flash, three second pause	Pressure Switch Failed Open	5
Four Flash, three second pause	ECO (Energy Cut Off) Limit Lockout thermostat temperature limit was exceeded.	6
Five Flash, three second pause	Flame Out Of Sequence	7
Six-One Flash, three second pause	Soft Lockout - Retry Limit - Failed Trial For Ignition	8
Six-Two Flash, three second pause	Soft Lockout - Recycle Limit - Pressure Switch/ High Limit opened	9
Six-Three Flash, three second pause	Soft Lockout - Recycle Limit - Flame Lost	10
Six-Four Flash, three second pause	Soft Lockout - Flame out of Sequence Sensed	11
Seven Flash, three second pause	N/A (Flammable Vapour Sensor Lockout)	12
Eight-One Flash, three second pause	N/A (Flammable Vapour Sensor Fault Detected)	13
Eight-Two Flash, three second pause	Temperature Sensor Fault Detected	14
Eight-Three Flash, three second pause	Electronics Fault Detected	15
Eight-Four Flash, three second pause	Valve Fault Detected	16
LED continuously “ON”	Hard Lockout	17

READING THE LED FLASH SEQUENCE.

The LED indicator light is active when the gas valve/thermostat is in operation. The light will normally show a flash sequence of a short flash once every four seconds or a “Heartbeat” of alternating bright/dim. Multiple flash codes indicate an error and can be read as follows:

Example: Corrective Action Number 9, Six-Two Flash, three second pause. For this code, the LED indicator light will make six bright flashes, pause for one second and then make two more bright flashes. The LED will pause for three seconds and repeat the six-two cycle of flashes.

CORRECTIVE ACTIONS

See the table below for corrective actions corresponding to the Corrective Action Number in the "System Status And Error Codes" section above. If following those corrective actions does not resolve the error, refer to "Other Symptoms" table later in this manual.

Corrective Action Number	Corrective Action
1	Normal operation, no action necessary.
2	Normal operation, no action necessary.
3	1. Flame rod not properly seated in flame, reposition rod. 2. Clean flame sensor rod with fine steel wood to avoid lock-out.
4	1. Check that blower operates and does not have any blockages. 2. Check that all wiring is correct. 3. Ensure the air pressure sensing tubes are properly connected and not kinked or damaged. 4. Ensure the air pressure switch is correct and the air pressure switch (N.O.) is not bypassed (jumpered). 5. Turn power to the unit “OFF” – check for continuity of the air pressure switch (N.O.) with wires disconnected; a. If the pressure switch contacts show continuity (closed circuit), replace the pressure switch, b. If the pressure switch contacts are open and all wiring is correct, replace the Gas Control.
5	1. Ensure the blower is running - check for 120 VAC to the blower when the heating cycle begins. a. If the Gas Control does not energize the blower - replace the Gas Control. b. If the blower fails to start when energized: i. Turn power to the heater “OFF” – check if the capacitor is connected; ii. Turn power to the heater “OFF” – check the capacitor rating (3uF +/-5%); iii. Turn power to the heater “OFF” - replace the blower assembly. 2. Ensure the air pressure sensing tubes are properly connected and not kinked or damaged; 3. Check continuity of the vent temperature limit switch – replace switch if contact remain open. 4. Check continuity of the air pressure switch (N.C.) – replace switch if contact remain open. 5. Ensure the correct size of exhaust and air intake pipes were used per the instruction manual for vent length. Ensure maximum number of elbows or equivalent feet of both pipes was not exceeded. 6. Ensure there are no obstructions in the exhaust and air intake pipes. 7. If there are excessive restrictions in the air intake pipe the air pressure switch (N.C.) will open. 8. Check air pressure switch performance - Check blower vacuum with a manometer - Compare with air pressure switch (N.O.) setting. If the air pressure switch proves defective – replace the air pressure switch (N.O.). 9. If the air pressure switch (N.O.) performance test results prove the air pressure switch is working properly, and all other steps are followed, and fault code persist – replace the control.
6	Resetting the ECO (Energy Cut-Out) requires manual intervention. It cannot be reset by cycling power to the control. Reset Procedure 1. Manual reset is performed by turning the set point knob to lowest set point position for a minimum of 10 seconds and then return it to the desired set point. 2. The manual reset of the ECO can only be performed 2 times, after the ECO trips a third time, the gas valve will enter a hard lock out where the gas control will need to be replaced.
7	1. Turn the power “OFF” for 10-20 seconds then “ON” again to clear the fault code. 2. Flame rod not properly seated in flame, reposition rod. 3. Clean flame sensor rod with fine steel wood to avoid lock-out. 4. Replace the control if the fault code persists.

Corrective Action Number	Corrective Action
8	1. Gas supply is turned off or gas pressure is too low. Ensure supply pressure and manifold gas pressures are within requirements. Manifold pressure is nonadjustable, if gas supply pressure proves correct and manifold pressure is off by more than 0.3” WC replace the control. 2. Low supply voltage - should be 115 - 125 VAC 3. Ensure flame sensor is making good contact with the burner flame and flame is steady. 4. Ensure flame sensor is clean, use ultra- fine steel wool to clean flame sensor. 5. Ensure the Hot Surface Igniter is positioned properly to provide consistent ignition. 6. Check for any cracks in igniter assembly ceramic insulators - replace igniter assembly if damaged. 7. Check resistance of igniter at room temperature (at the plug). Replace the igniter if resistance is not within 42-76 ohms at room temperature. 8. Ensure correct size of exhaust and air intake pipes were used per the instruction manual for vent length. Ensure maximum number of elbows or equivalent feet of both pipes was not exceeded.
9	1. Ensure the blower is running - check for 120 VAC to the blower when the heating cycle begins. a. If the Gas Control does not energize the blower - replace the Gas Control. b. If the blower fails to start when energized: i. Turn power to the unit “OFF” – check if the capacitor is connected; ii. Turn power to the unit “OFF” – check the capacitor rating (3uF +/-5%); iii. Turn power to the unit “OFF” - replace the blower assembly. 2. Ensure the air pressure sensing tubes are properly connected and not kinked or damaged; 3. Check continuity of the vent temperature limit switch – replace switch if contacts remain open. 4. Check continuity of the air pressure switch (N.C.) – replace switch if contacts remain open. 5. Ensure correct size of exhaust and air intake pipes were used per the instruction manual for vent length. Ensure maximum number of elbows or equivalent feet of both pipes was not exceeded. 6. Ensure there are no obstructions in the exhaust and air intake pipes. 7. If there are excessive restrictions in the air intake pipe the air pressure switch (N.C.) will open. 8. Check air pressure switch performance - Check blower vacuum with a manometer - Compare with air pressure switch (N.O.) setting. If the air pressure switch proves defective – replace the air pressure switch (N.O.). 9. If the air pressure switch (N.O.) performance test results prove the air pressure switch is working properly, and all other steps are followed, and fault code persist – replace the control.
10	1. Gas supply is turned “OFF” or gas pressure is too low. Ensure supply pressure and manifold gas pressures are within requirements. Manifold pressure is nonadjustable. If supply pressure proves correct and manifold, pressure is off by more than 0.3” WC replace the control. 2. Low supply voltage - should be 115 - 125 VAC 3. Ensure flame sensor is making good contact with the burner flame and flame is steady. 4. Ensure the flame sensor is clean, use ultra-fine steel wool to clean flame sensor. 5. Ensure the Hot Surface Igniter is positioned properly to provide consistent ignition. 6. Check for any cracks in igniter assembly ceramic insulators - replace igniter assembly if damaged. 7. Check resistance of igniter at room temperature (at the plug). Replace the igniter if resistance is not within 42-76 ohms at room temperature. 8. Ensure correct size of exhaust and air intake pipes were used per the instruction manual for vent length. Ensure maximum number of elbows or equivalent feet of both pipes was not exceeded.
11	1. Turn the power “OFF” for 10-20 seconds then “ON” again to clear the fault code. 2. Replace the control if fault code persists.
12	N/A – If this happens replace the gas control.
13	N/A – If this happens replace the gas control.
14	1. Turn the power “OFF” for 10-20 seconds then “ON” again to clear the fault code. 2. Replace the control if the fault code persist.
15	1. Turn the power “OFF” for 10-20 seconds then “ON” again to clear the fault code. 2. Replace the control if the fault code persist.
16	1. Turn the power “OFF” for 10-20 seconds then “ON” again to clear the fault code. 2. Replace the control if the fault code persist.
17	1. Control has failed. If resetting the control does not clear the fault code, replace the control.

OTHER SYMPTOMS

Problem	Possible Cause(S)	Corrective Action
Insufficient Hot Water	1. Thermostat set too low 2. Leaking faucets/Wasted hot water 3. Wrong piping connections 4. Water heater too small 5. Sediment or lime in tank 6. Long runs of exposed piping 7. Hot-water piping in outside wall	1. Turn temperature knob to higher setting 2. Repair faucets 3. Correct piping: dip tube must be in cold inlet 4. Install adequate heater 5. Drain/flush-provide water treatment if needed 6. Insulate piping 7. Insulate piping
Water Is Too Hot	1. Thermostat setting is too high 2. Heater stacking (Failure to install the proper vent screens)	1. Turn temperature knob to lower setting 2. Ensure correct size of exhaust and air intake pipes were used per the instruction manual for vent length. Ensure proper vent screens were used.
Slow Hot Water Recovery	1. Thermostat set too low 2. Wrong piping connection 3. Wasted hot water 4. Heater too small	1. Turn temperature knob to higher setting 2. Correct piping-dip tube must be in cold inlet 3. Advise customer 4. Install adequate heater
Drip From Relief Valve	1. Heater stacking (Failure to install the proper vent screens) 2. Closed water system 3. Pressure build-up 4. Improperly seated valve	1. Ensure the correct size of exhaust and air intake pipes were used per the instruction manual for vent length. Ensure the proper vent screens were used. 2. See thermal expansion section 3. Use a pressure-reducing valve and relief valve 4. Check Relief valve for proper operation (Do Not plug T&P valve)
Smelly Water	1. Sulfides in water supply 2. Bacteria in water supply 3. Incompatible anode	1. Chlorination procedure 2. Chlorination procedure 3. Replace with anode appropriate for water conditions
Condensation	1. Filling the new water heater for the first time 2. Water dripping from blower assembly	1. Normal operation: the condensation should disappear after heater warms up 2. Install condensate hose to drain port on the rubber coupling
Water Leakage		1. Check "Leakage Checkpoints"
Exhaust Pipe Too Hot	1. Failure to use correct size of exhaust and air intake pipes; 2. Failure to install the vent screens; 3. Blower high limit switch fails to open - switch defective	1. Ensure the correct size of exhaust and air intake pipes were used per the instruction manual for vent length. Ensure maximum number of elbows or equivalent feet of both pipes was not exceeded. 2. Ensure that the proper vent screens were used. 3. Replace blower high limit switch



500 Tennessee Waltz Parkway,
Ashland City, TN 37015
• Phone: 800-821-2017
• Fax: 800-644-9306

www.statewaterheaters.com